JUMO tecLine Ci-S

Inductive conductivity and temperature sensor for general process engineering



Installation Instructions

20294200T94Z001K000

V1.00/EN/00582016

Contents

1 Safety information 4

1.1 Warning symbols 4
1.2 Note signs 4

2 General information. 5

2.1 Startup 5
2.2 Brief description 5
2.3 Typical areas of application 5
2.4 Product advantages 5
2.5 Function of the sensor 6
2.6 Measurement section setup 7

3 Identifying the instrument version 8

3.1 Nameplate 8
3.2 Order details 8
3.3 Accessories 9
3.4 Scope of delivery 9

4 Technical data 10

5 Mounting. 11

5.1 Dimensions 11
5.2 Installation notes 14
5.3 Minimum distance to wall. 15
5.4 Mounting examples 16

6 Electrical connection. 18

7 Maintenance 19

7.1 Cleaning the device 19

8 Troubleshooting. 20

8.1 Possible faults 20
8.2 Device inspection. 20

1 Safety information

1.1 Warning symbols



DANGER!

This symbol indicates that **personal injury caused by electrical shock** may occur if the respective precautionary measures are not carried out.



WARNING!

This symbol in connection with the signal word indicates that **personal injury** may occur if the respective precautionary measures are not carried out.



CAUTION!

This symbol in connection with the signal word indicates that **damage to assets or data loss** will occur if the respective precautionary measures are not taken.

1.2 Note signs



NOTE!

This symbol refers to **important information** about the product, its handling, or additional use.



REFERENCE!

This symbol refers to **further information** in other sections, chapters, or manuals.



FURTHER INFORMATION!

This symbol is used in tables and indicates that **further information** is provided after the table.



DISPOSAL!

At the end of its service life, the device and any batteries present do not belong in the trash! Please ensure that they are **disposed of** properly and in an **environmentally friendly** manner.

2.1 Startup



CAUTION!

Should a measurement and control ciruit component suddenly fail, this could possibly lead to a dangerous overdose!

▶ Suitable preventive measures must be in place to prevent this from happening.



NOTE!

If any difficulties should arise during startup, please do not manipulate the unit in any way. You could endanger your rights under the instrument warranty!

2.2 Brief description

The sensor detects the electrolytic conductivity of a process liquid. The sensor uses the inductive principle of measurement. An integrated (Pt1000) temperature probe acquires the process temperature at the same time.

The sensors in this data sheet add some generally established variants in different engineering versions to the wide range of inductive JUMO conductivity sensors.

The sensors alternatively possess an exposed temperature sensor (in a stainless steel pocket) or an internal temperature sensor. They are used when it is not possible to use other measuring cell materials for chemical reasons.

A vast number of process connections are available to ensure flexibility in systems, and can even be used as spare equipment for older devices. There is an immersion variant that can be used in open tanks and channels.

Because it measures inductively, the sensor is practically maintenance-free, compared with the conductive method; deposits and grease or oil film on the surface of the sensor have virtually no effect on measuring accuracy.

JUMO tecLine Ci-S sensors are designed for connection to the JUMO AQUIS 500 Ci transmitter, as per data sheet 202566.

2.3 Typical areas of application

- Liquid foodstuffs
- CIP/SIP systems
- Other rinsing and cleaning processes
- Measuring the concentration of acids, lyes and cleaning chemicals, etc.

2.4 Product advantages

- Different mounting dimensions allow a variety of applications
- Materials are FDA/food-use approved
- Numerous process connection variants
- Fast-response temperature sensor

2 General information

2.5 Function of the sensor

Conductivity is measured by an inductive probe. AC voltage supplies the transmitter coil. Current is induced in the receiver coil, subject to the conductivity of the liquid to be measured. The current is proportional to the conductivity of the medium.

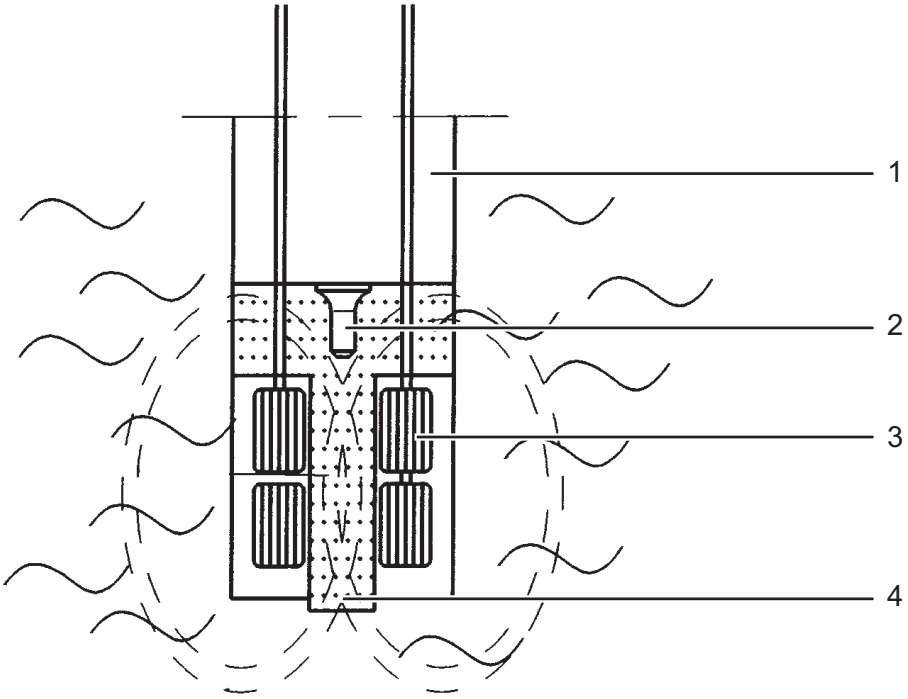

(1) PVDF cell body
(2) External temperature probe
(3) Measuring coils
(4) Liquid loop

2.6 Measurement section setup

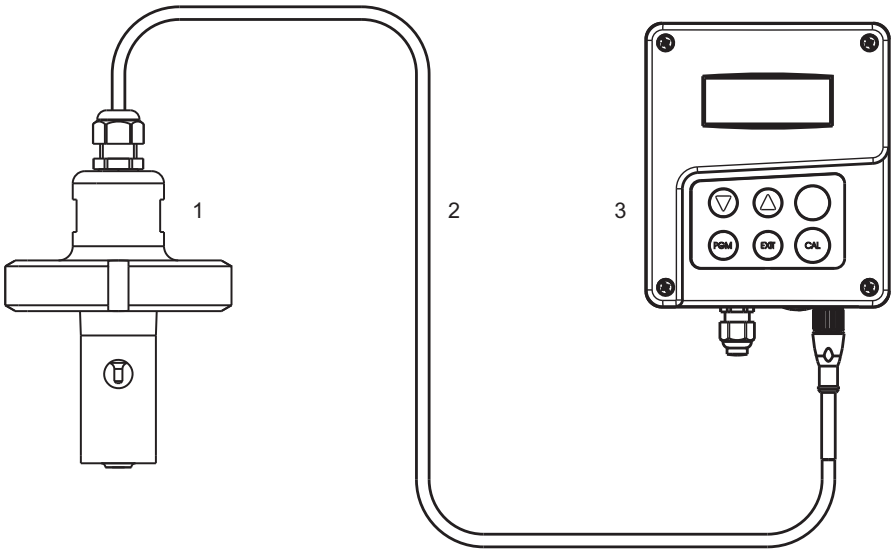

(1) JUMO tecLine Ci-S
(2) Connecting cable (an integral part of the JUMO tecLine Ci-S)
(3) JUMO AQUIS 500 Ci

NOTE!

The JUMO tecLine Ci-S inductive conductivity and temperature sensor can only be operated with the JUMO AQUIS 500 Ci indicator/controller for conductivity, concentration and temperature.

3 Identifying the instrument version

3.1 Nameplate

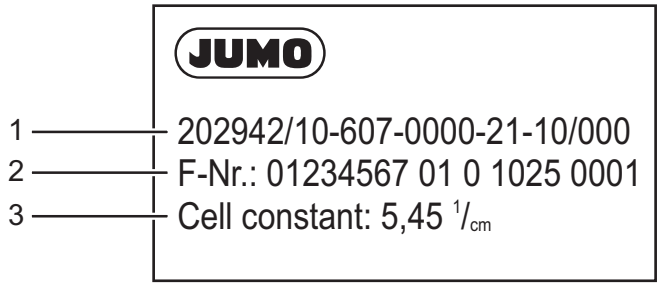

(1) Type
(2) Serial number
(3) Cell constant K ($^{1}/_{cm}$)

NOTE!

The cell constant K is needed for calibration at the transmitter/controller.
The date of manufacture is encoded in the "F-Nr." (serial number):
1025 = year of manufacture 20**10**/calendar week **25**

3.2 Order details

	(1)	**Basic type**
202942		JUMO tecLine Ci-S – Inductive conductivity and temperature sensor for general process engineering
	(2)	**Basic type extension**
10		PVDF sensor body
	(3)	**Process connection**
107		Thread G 1 1/4
108		Thread G 1 1/2
110		Thread G 2
606		Taper socket with union nut DN 40, DIN 11851 (dairy pipe fittings)
607		Taper socket with union nut DN 50, DIN 11851 (dairy pipe fittings)
608		Taper socket with union nut DN 65, DIN 11851 (dairy pipe fittings)
609		Taper socket with union nut DN 80, DIN 11851 (dairy pipe fittings)
617		Clamping socket (clamp) 2,5“ similar to DIN 32676
690		SMS DN 2
706		Immersion version
	(4)	**Insertion length**
0000		Without
0500		500 mm
1000		1000 mm
1500		1500 mm
2000		2000 mm
	(5)	**Electrical connection Anschluss**
21		Fixed cable with M12 connector
	(6)	**Length of fixed cable**
10		10 m

20		20 m
30		30 m
	(7)	**Extra code**
000		Without
268		Internal temperature probe

	(1)		(2)		(3)		(4)		(5)		(6)		(7)
Order code		/		-		-		-		-		/	
Order example	202942	/	10	-	607	-	0000	-	21	-	10	/	000

3.3 Accessories

Item	**Part no.**
Flange DN 32 complete for type 202820/40 and 202755/xx-706	00083375
Flansch DN 50 complete for type 202820/40 and 202755/xx-706	00083376
Weld-on threaded adapter with PTFE sealing ring	00085020
Grooved union nut DN 50	00343368
Grooved union nut SMS DN 2	00345162
Grooved union nut F 65	00362956
Calibration adapter for inductive conductivity, type 202711/21	00543395

NOTE!

The following are required for initial startup of the sensor and transmitter/controller, or when replacing components:
- Transmitter/controller e.g. JUMO AQUIS 500 Ci, data sheet 202566
- JUMO tecLine Ci-S inductive conductivity and temperature sensor
- Calibration adapter for inductive conductivity measurement, type 202711/21, data sheet 202711

3.4 Scope of delivery

1 level probe in the ordered version
Installation instructions

4 Technical data

Principle of conductivity	Inductive
Measuring range of conductivity	0 to 1000 µS/cm to 0 to 2000 mS/cm (depending on the connected transmitter)
Accuracy of conductivity in the measuring range	
0 to 1 mS/cm	≤ 1 %
0 to 10 mS/cm	≤ 0.5 %
0 to 100 mS/cm	≤ 0.5 %
0 to 1000 mS/cm	≤ 1%
0 to 2000 mS/cm	≤ 1 %
Cell constant	k = 5.45 1/cm
Temperature sensor	Pt1000, Class A
t_{90} temperature[a]	≤ 6 s
Admissible ambient temperature	-10 to +60 °C
Admissible storage temperature	-20 to +75 °C
Protection type[b]	IP67
Admissible medium temperature	
In operation	-10 to +125 °C
briefly (max. 15 minutes)	≤ 140 °C
Admissible process pressure at 20 °C at 60 °C at 125 °C at 140 °C (max. 15 minutes) at -10 to +140 °C	10 bar 6 bar 2 bar unpressurized minimum -0.1 bar
Sensor material according to design type	
in contact with medium	PVDF, stainless steel 1.4301, AISI 304, stainless steel 1.4435, AISI 316L, EPDM
not in contact with medium	Stainless steel 1.4301, AISI 304, PA6, CR/NBR, PUR, FPM, CuZn
Process connection	See order details/dimensions
Electrical connection	JUMO tecLine Ci type inductive conductivity sensors are suitable for connection to the JUMO AQUIS 500 Ci type transmitters/controller!
Connection type	Non-detachable cable
Socket	M12 socket
Socket material	CuZn, PA6.6 GF30, PUR
Cable material	Outer sleeve: PUR
Cable lengths	See order details
Admissible temperature	-20 to +75 °C

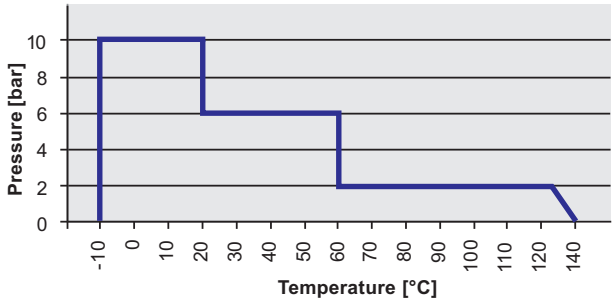

[a] EN 60751
[b] EN 60529

NOTE!

The temperature, pressure and process medium affect the operating life of the sensor.

5.1 Dimensions

Process connections (separate sensor)

Version with process connection 107 = screw-in thread G 1 1/4A 108 = screw-in thread G 1 1/2A 110 = screw-in thread G 2A and extra code 768	Remote version with process connection 606 = MK DN 40 607 = MK DN 50 608 = MK DN 65 609 = MK DN 80 and extra code 768 (union nut is not included in the scope of delivery)
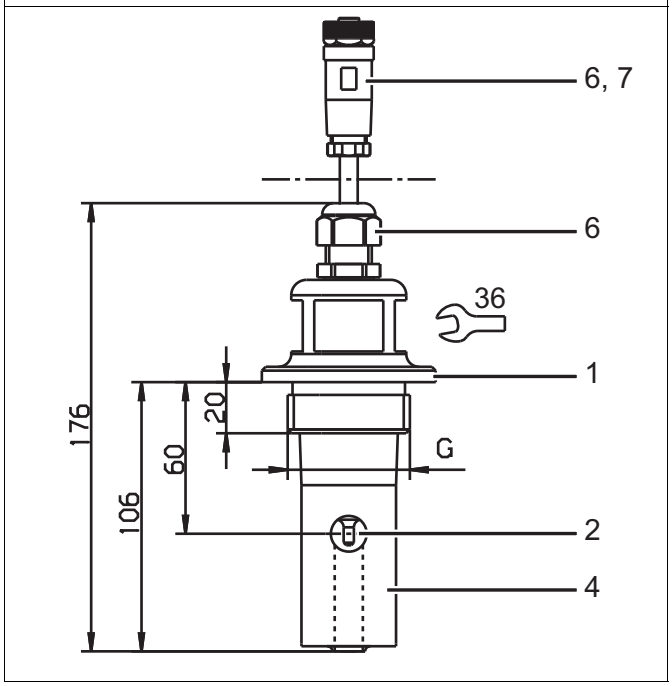	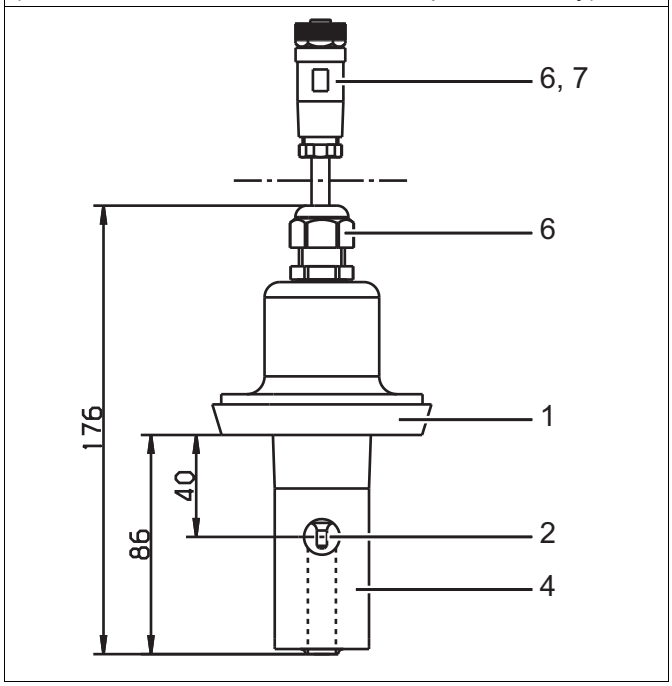

1 Stainless steel 1.4301
2 Stainless steel 1.4435
4 PVDF
6 PA6
7 PPS GF40

5 Mounting

Remote version with process connection 617 = 2 1/2“ clamp and extra code 768 (retaining clamp is not included in the scope of delivery)	Remote version with process connection 690 = 2“ SMS and extra code 768 (retaining clamp is not included in the scope of delivery)
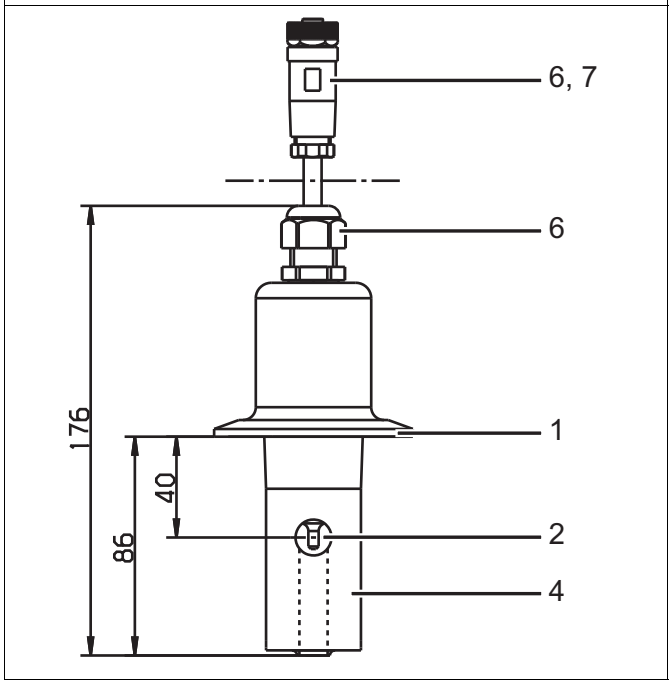	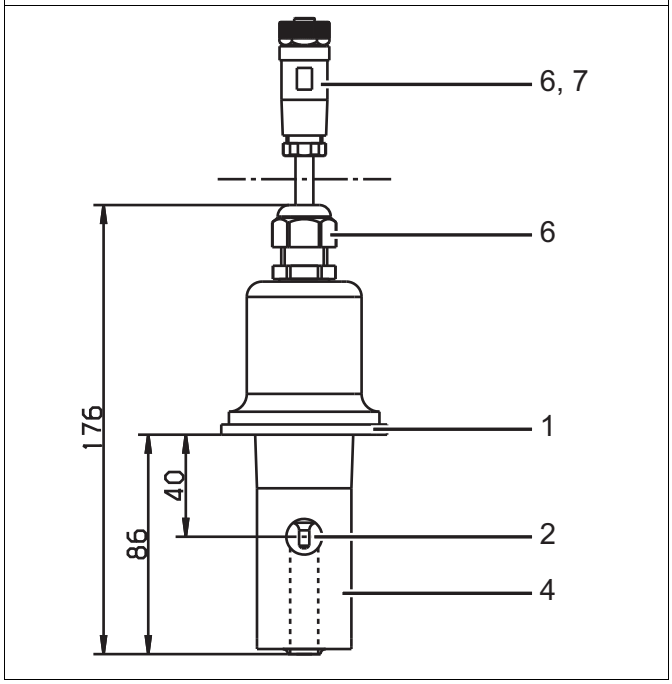

1 Stainless steel 1.4301
2 Stainless steel 1.4435
4 PVDF
6 PA6
7 PPS GF40

Remote version with process connection
706 = immersion version
(pipe clips are not included in the scope of delivery)

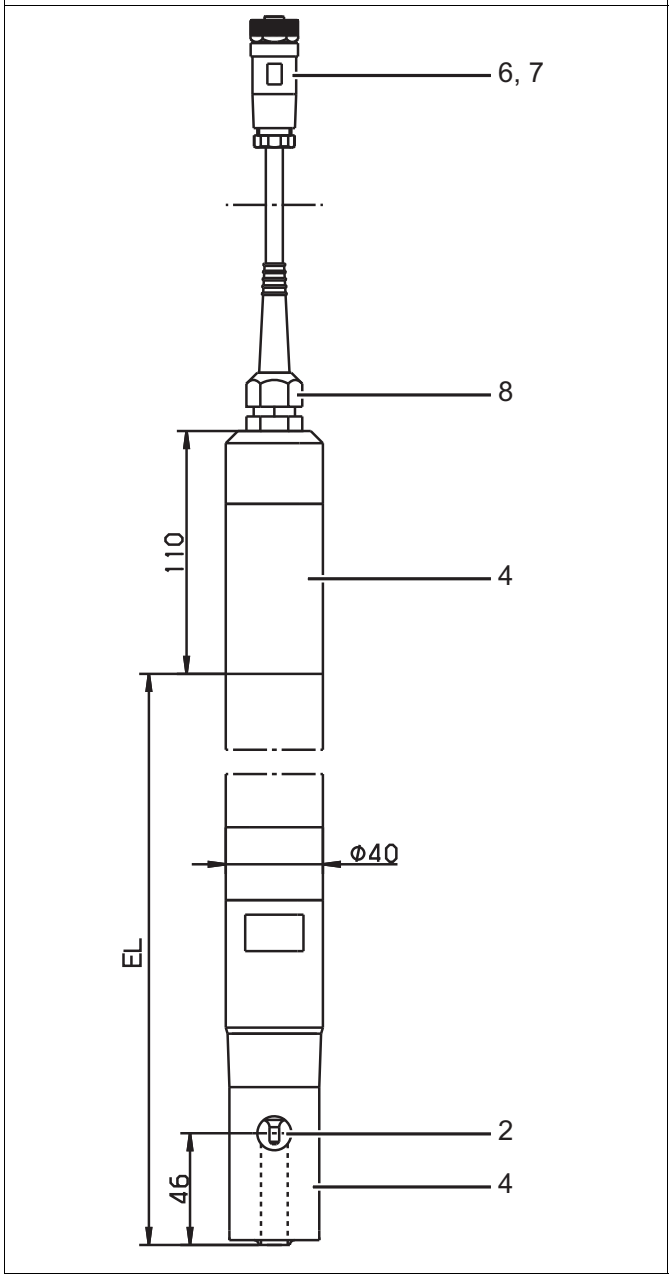

2	Stainless steel 1.4435	4	PVDF
6	PA6	7	PPS GF40
8	Nickel-plated brass and EPDM		

5 Mounting

5.2 Installation notes

CAUTION!

The ambient conditions (temperature, pressure, etc.), must not exceed or fall below the admissible range, see chapter 4 „Technical data“, page 10.

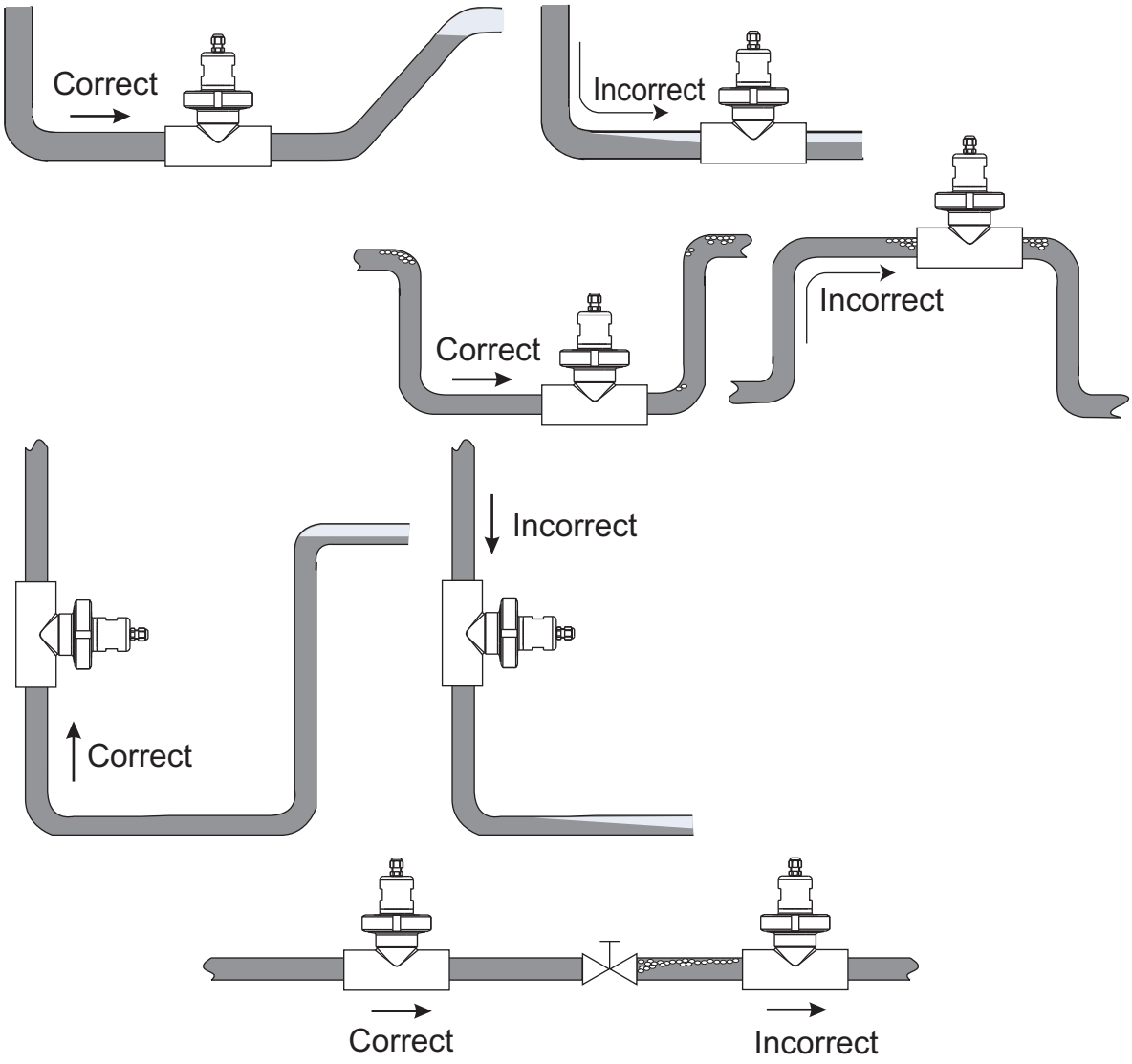

NOTE!

Avoid: gas bubble formation, dry-running, flow separation, turbulence.

5.3 Minimum distance to wall

NOTE!

If the distance to the wall has to be less than the minimum of 18 mm, you are strongly advised to calibrate the "installation factor" on the transmitter, see operating manual **B 202566.0**.

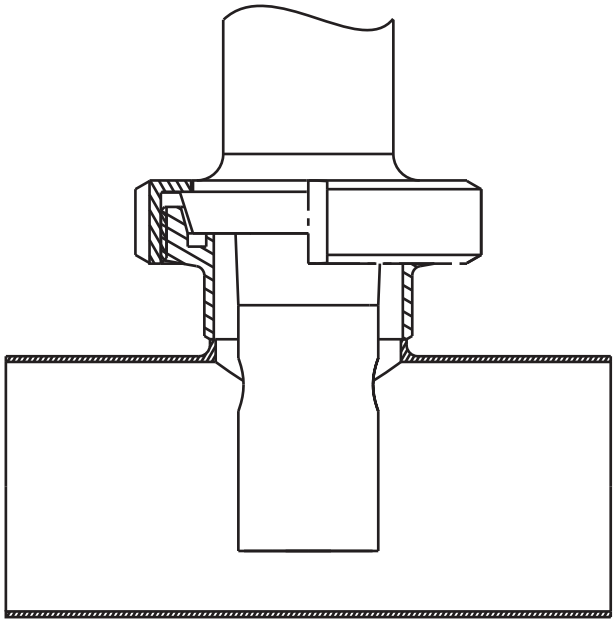

5 Mounting

5.4 Mounting examples

Weld-on threaded adapter

Process connection 607
with grooved union nut DN 50

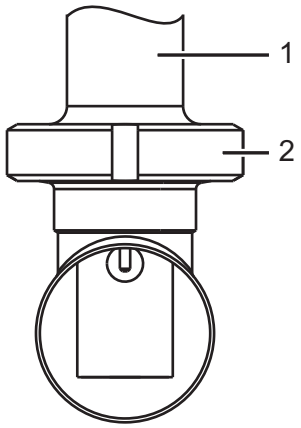

Reducing tee DIN short, SSS DN 65/50
(to be provided by customer, not supplied by JUMO)

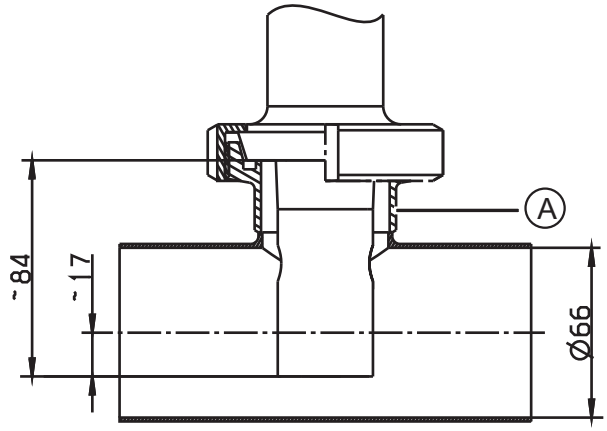

Tee DIN 11852, SSS DN 50
Dimension B shortened to 30 mm
(to be provided by customer, not supplied by JUMO)

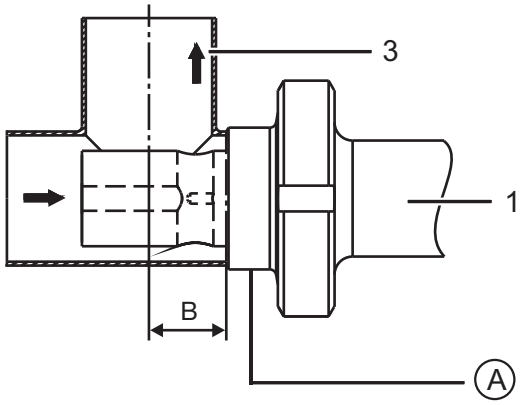

Weld-on threaded adapter DN 50, DIN 11851
(mating piece for process connection 607)
Part no.: 00085020

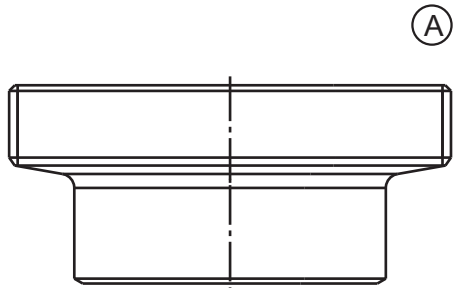

1 Process connection 607
2 Grooved union nut DN 50
3 Flow direction

Clamp

Process connection 617 with clamp ring	Tee short, SSS DN 2.5“ (to be provided by customer, not supplied by JUMO)
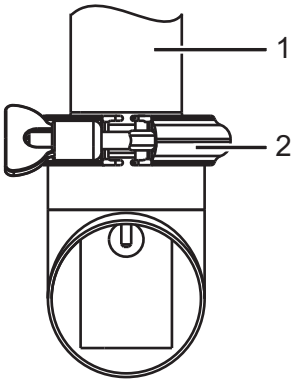	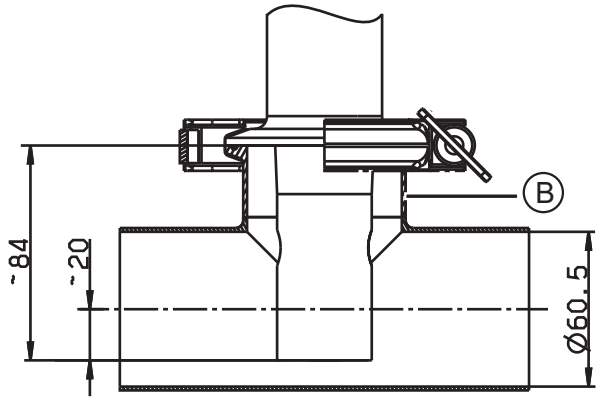

1 Process connection 617
2 Clamp ring

B „inch“ threaded adapter SSS DN 2.5“

Flange DN 32 and Flange DN 50

Flange DN 32 suitable for process connection 706 Part no.: 00083375 Material: PP	Flange DN 50 suitable for process connection 706 Part no.: 00083376 Material: PP
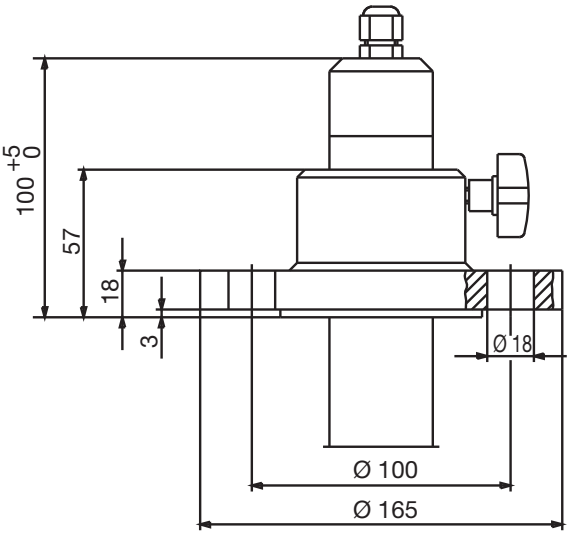	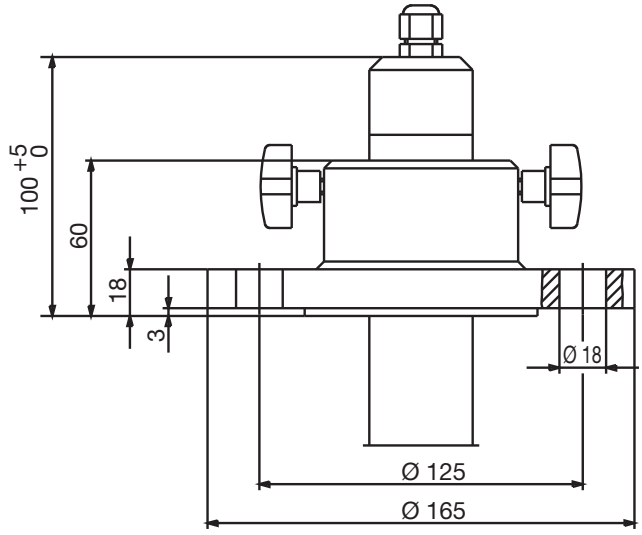

6 Electrical connection

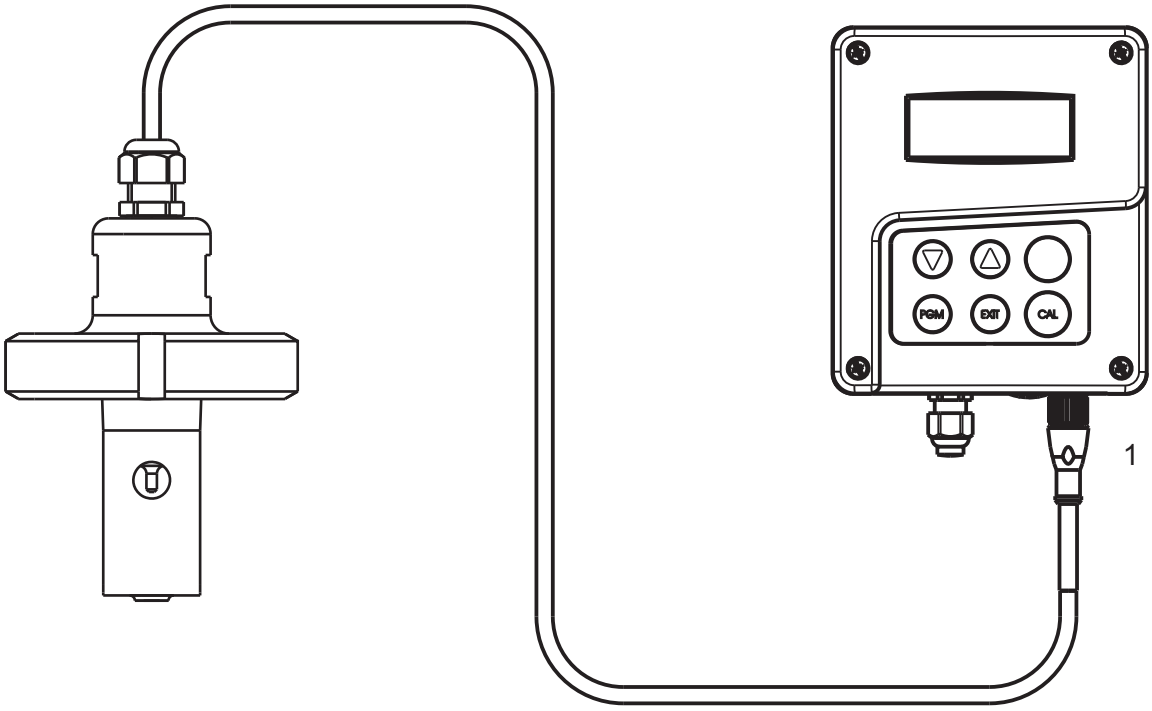

1 M12 socket

1. Insert and screw connect the M12 socket (1) in the connector on the transmitter/controller.

CAUTION!

The connecting cable must not be shortened or mechanically damaged!

▶ After connection, the inductive conductivity and temperature sensor **must** be calibrated, see operating manual **B 202566.0.1**.

7.1 Cleaning the device



CAUTION!

Do not use any solvents!

Stubborn films and deposits, for example, can be dissolved by dilute hydrochloric acid and removed with a soft brush (e.g. a bottle brush).

▶ **Comply with the safety regulations!**

8 Troubleshooting

8.1 Possible faults

Problem	Possible cause	Action
No measured value display or actual value output	There is no voltage supply	Check the voltage supply, check the terminals
Measured value display 000 or actual value output 0 % (e.g. 4 mA)	Sensor not immersed in medium; level in container too low	Top up the container
	Flow-through fitting is blocked	Clean the flow-through fitting
	Sensor faulty	
Incorrect or fluctuating measured value display	Sensor not immersed deeply enough	Fill the container
	No mixing	Ensure proper mixing; keep approx. 18 mm free all round the sensor to allow the liquid to flow round it
	Air bubbles	Follow the installation notes

8.2 Device inspection



NOTE!

The device is maintenance-free.
However, should the cause of measured value errors be unknown, the complete measuring chain (sensor, connecting cable and transmitter/controller) must be inspected.

JUMO GmbH & Co. KG
Street address:
Moritz-Juchheim-Straße 1
36039 Fulda, Germany
Delivery address:
Mackenrodtstraße 14
36039 Fulda, Germany
Postal address:
36035 Fulda, Germany
Phone: +49 661 6003-0
Fax: +49 661 6003-607
E-mail: mail@jumo.net
Internet: www.jumo.net

JUMO Instrument Co. Ltd.
JUMO House
Temple Bank, Riverway
Harlow - Essex CM20 2DY, UK
Phone: +44 1279 63 55 33
Fax: +44 1279 63 52 62
E-mail: sales@jumo.co.uk
Internet: www.jumo.co.uk

JUMO Process Control Inc.
6733 Myers Road
East Syracuse, NY 13057, USA
Phone: 315-437-5866
1-800-554-5866
Fax: 315-437-5860
E-mail: info.us@jumo.net
Internet: www.jumousa.com