JUMO tecLine Ci

Inductive conductivity and temperature sensor for hygienic applications Type 202941

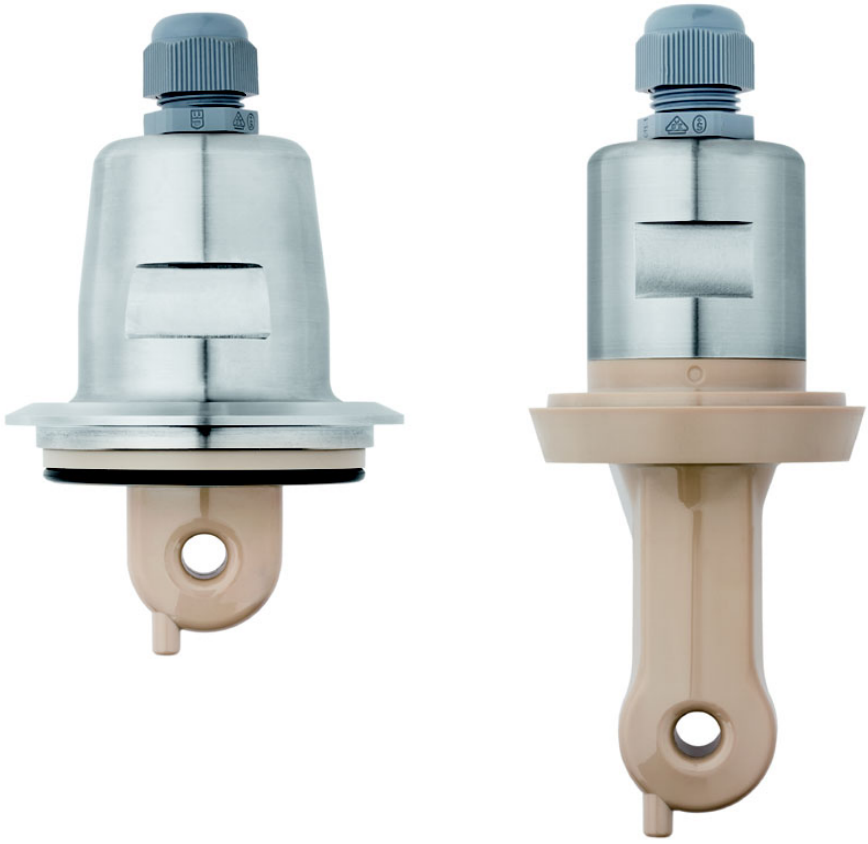

Installation Instructions

20294100T94Z001K000

V4.00/EN/00541500



Danger

A sudden failure of one of the measurement/control circuit components may possibly result in dangerous overdosing. Suitable preventive measures must be in place to prevent this from happening.



Caution

If any difficulties should arise during start-up, please do not manipulate the unit in any way. You could endanger your rights under the device warranty!



Note

This document contains the necessary information for the intended use of the modules to which it relates.

It is intended for technically qualified personnel who have received special training and have the appropriate knowledge in the field of analytical measurement technology.

The appropriate level of knowledge and the technically fault-free implementation of the safety information and warnings contained in the technical documentation provided are prerequisites for risk-free mounting, installation, and startup as well as for ensuring safety when operating the described modules.

Only qualified personnel have the required specialist knowledge to correctly interpret and implement the safety information and warnings contained in this document in specific situations.

Contents

1 Typographical conventions 4

1.1 Warning symbols 4

1.2 Reference symbols 4

2 General information 5

2.1 Brief description 5

2.2 Typical areas of application: 5

2.3 Product advantages: 5

2.4 Sensor function 6

2.5 Measurement section setup 7

3 Device identification 8

3.1 Nameplate 8

3.2 Type designation 9

3.3 **Accessories** 9

4 Technical data 10

4.1 Data 10

4.2 Dimensions 12

5 Mounting 15

5.1 Installation instructions 15

5.2 Minimum distance to wall 16

5.3 Installation in the flow direction 16

5.4 Mounting examples 17

6 Installation 19

6.1 Electrical connection 19

7 Maintenance 20

7.1 Cleaning the device 20

8 Troubleshooting 21

8.1 Possible causes of faults 21

8.2 Device inspection 21

9 China RoHS 22

1 Typographical conventions

1.1 Warning symbols



Danger

This symbol is used when there may be **danger to personnel** if the instructions are ignored or not followed correctly!



Caution

This symbol is used when there may be **damage to equipment or data** if the instructions are ignored or not followed correctly!

1.2 Reference symbols



Note

This symbol is used to draw your **special attention** to a remark.

abc[1]

Footnote

Footnotes are remarks that **refer to specific points** in the text. Footnotes consist of two parts:

Markers in the text and the footnote text.

The markers in the text are arranged as sequential superscript numbers.

✱

Instruction

This symbol indicates that an **action to be performed** is described.

The individual steps are marked by this asterisk.

Example:

✱ Calibrate the device.

2.1 Brief description

The sensor detects the electrolytic conductivity of a process liquid. The sensor uses the inductive principle of measurement. An integrated, fast-response (Pt1000) temperature probe detects the process temperature at the same time. The overall construction of the sensor conforms to EHEDG standards. The joint and gap-free design and the high quality of the finish meet the highest standards for hygienic processes. The quality of the PEEK (polyether ether ketone) body material is approved for food use.

A vast number of process connections are available to ensure flexibility in systems, and can even be used as spare equipment for older devices.

The sensor is primarily designed for use in food and drink installations. But where the body material is suitable, it can also be used in other industries. Customized variants (OEM versions) are available on request.

Because it measures inductively, the sensor is practically maintenance-free, compared with the conductive method; deposits and grease or oil film on the surface of the sensor have virtually no effect on measuring accuracy. The JUMO tecLine Ci sensor is designed for connection to the transmitters JUMO AQUIS 500 Ci (as per data sheet 202566), JUMO CTI-750 (as per data sheet 202756) and JUMO AQUIS touch S/P (as per data sheet 202580/202581).

2.2 Typical areas of application:

Dairies, breweries, soft drinks manufacturing/bottling, mineral springs, drinking water, liquid food production, CIP/SIP systems, other rinsing and cleaning processes, measuring the concentration of acids, lyes and cleaning chemicals, etc.

2.3 Product advantages:

- EHEDG-compliant sensor design enhances hygiene safety
- Materials are FDA/food-use approved
- A variety of process connection variants
- A fast-response, internal temperature sensor
- Constructed without seals (parts coming into contact with the medium)

2 General information

2.4 Sensor function

Conductivity is measured by an inductive probe. The transmitter coil has an AC voltage supply. Current is induced in the receiver coil, subject to the conductivity of the liquid to be measured. The current is proportional to the conductivity of the medium.

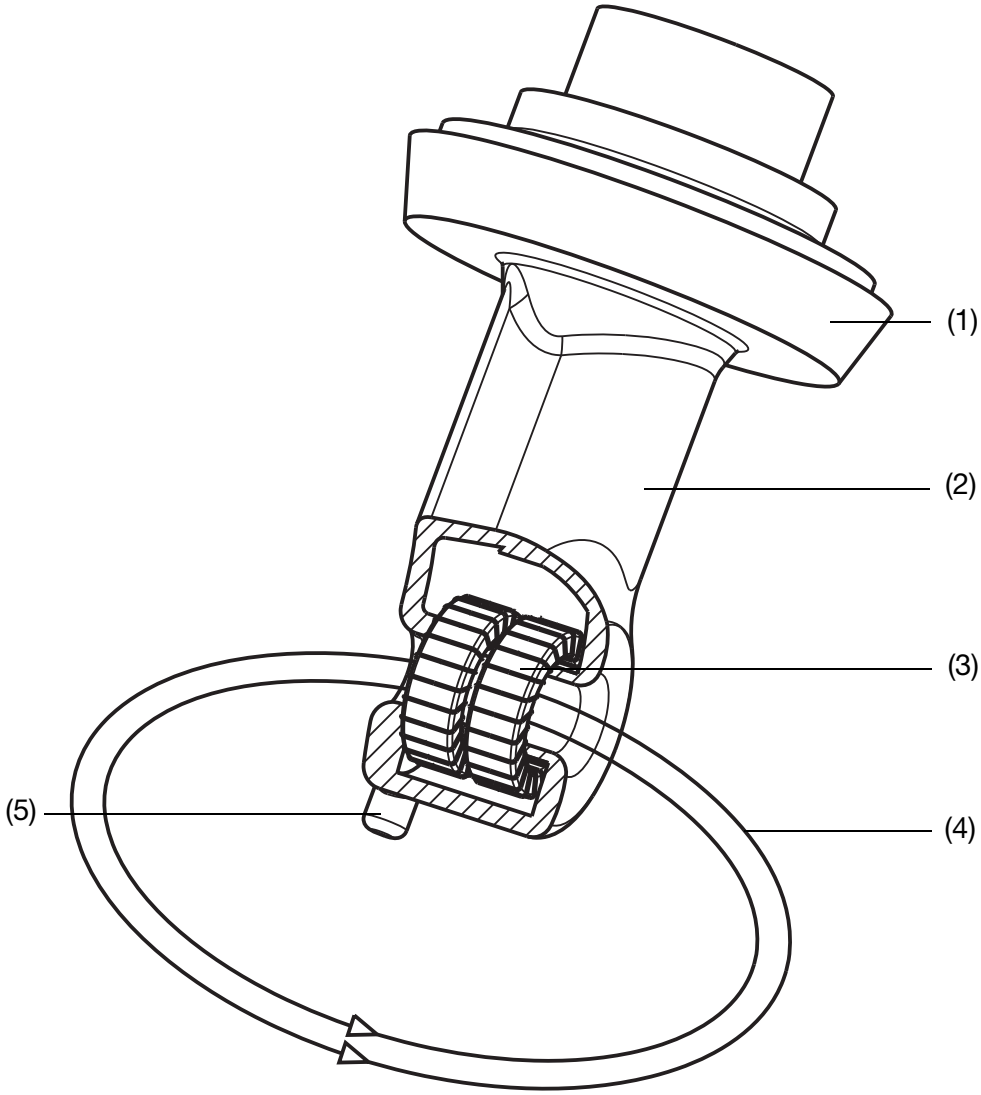

(1) Process connection
(2) PEEK material
(3) Induction coils
(4) Liquid loop
(5) Temperature sensor

2.5 Measurement section setup

Note

The JUMO tecLine Ci hygienic inductive conductivity and temperature sensor can only be used with the transmitters JUMO AQUIS 500 Ci, JUMO CTI-750, and JUMO AQUIS touch S/P

The illustration below shows the use of the JUMO AQUIS 500 Ci as an example.

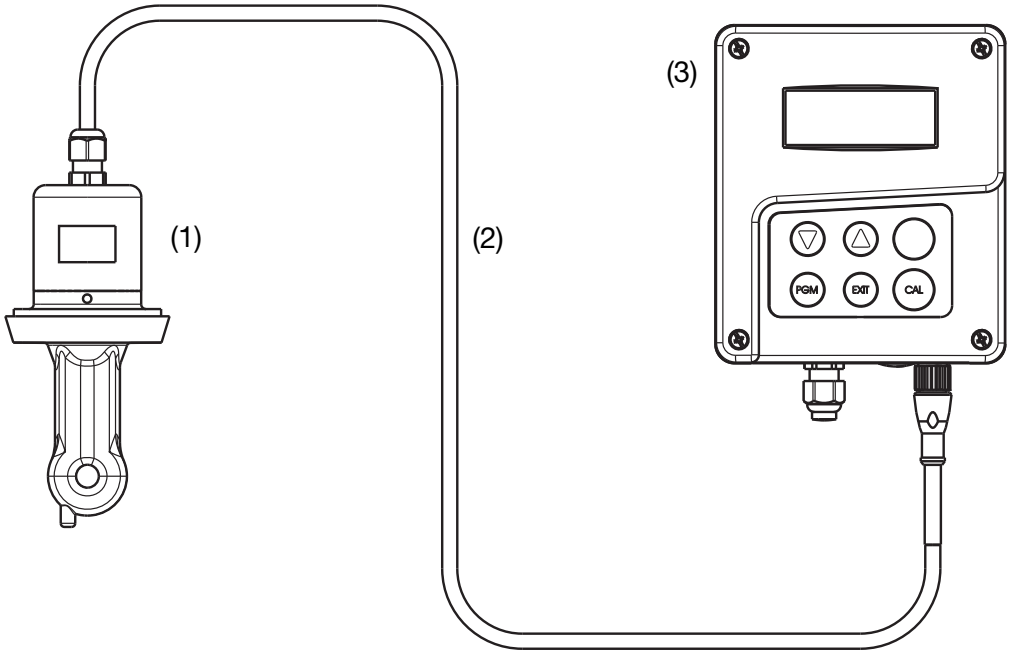

(1) JUMO tecLine Ci
Inductive conductivity and temperature sensor for hygienic applications

(2) The connecting cable is an essential part of the JUMO tecLine Ci (1)

(3) JUMO AQUIS 500 Ci
Transmitter/controller for conductivity, concentration and temperature

3 Device identification

3.1 Nameplate

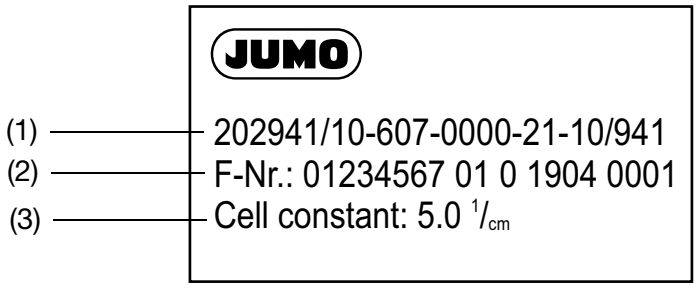

(1) Type
(2) Serial number
(3) Cell constant K (1/cm)

Note

Cell constant K is needed for calibration at the transmitter/controller.

The date of manufacture is encoded in "F-Nr." (serial number):

1904 means year of manufacture 2019, calendar week 04

3.2 Type designation

(1) Basic type

202941 JUMO tecLINE Ci – inductive conductivity and temperature sensor for hygienic applications

(2) Basic type extension

10 standard version

(3) Process connection

108 Screw connection G 1 1/2
110 Screw connection G 2
607 Taper socket for union nut DN 50 DIN 11851 (dairy compression fitting)[a]
608 Taper socket for union nut DN 65 DIN 11851 (dairy compression fitting)[a]
609 Taper socket for union nut DN 80 DIN 11851 (dairy compression fitting)[a]
617 Clamping socket (clamp) 2 1/2" similar to DIN 32676[b]
686 Varivent® connection DN 50/40[b]
690 SMS DN 2"[a]

(4) Immersion length

0,0 without

(5) Electrical connection

21 fixed cable with M12 connector

(6) Length of fixed cable

10 10 m (standard length)
15 15 m
20 20 m
30 30 m

[a] Union nut not included in delivery.

[b] Retaining clamp not included in delivery.

3.3 Accessories

Designation	Part No.
Calibration adapter for inductive conductivity measurement, type 202711/21	00543395

4 Technical data

4.1 Data

Conductivity measurement principle	Inductive
Conductivity measuring range[a]	0 to 500 µS/cm — 0 to 2000 mS/cm (depending on connected transmitter)
Conductivity accuracy	
for measuring range:	
0 to 500 µS/cm	≤ 1 %
0 to 1000 µS/cm	≤ 1 %
0 to 2000 µS/cm	≤ 0.5 %
0 to 10 mS/cm	≤ 0.5 %
0 to 20 mS/cm	≤ 0.5 %
0 to 50 mS/cm	≤ 0.5 %
0 to 100 mS/cm	≤ 0.5 %
0 to 200 mS/cm	≤ 0.5 %
0 to 500 mS/cm	≤ 0.5 %
0 to 1000 mS/cm	≤ 1 %
0 to 2000 mS/cm	≤ 1 %
Cell constant	dependent on design: 5.0 1/cm or 5.15 1/cm
Temperature sensor	Pt1000, Class A
Temperature measuring range	-50 to +150 °C
t_{90} temperature[b]	≤ 26 sec
Permissible ambient temperature	-10 to +60 °C
Permissible storage temperature	-20 to +75 °C
Enclosure protection[c]	IP67
Permissible medium temperature[d]	
In operation	-10 to +125 °C
For short periods (sterilization)	≤ 150 °C (≤ 60 min, ≤ 5 bar)

Permissible process pressure	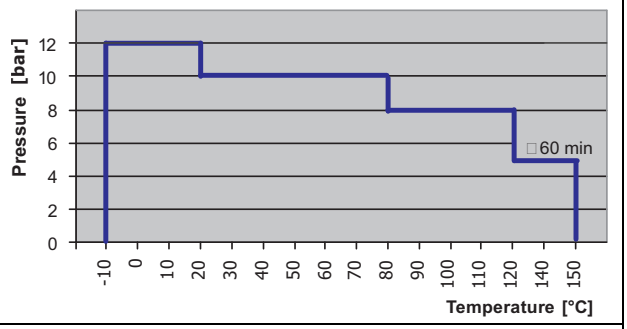
at +20 °C	12 bar
at +80 °C	10 bar
at +125 °C	8 bar
at +150 °C	5 bar (≤ 60 min)
at -10 to +150 °C	min. -0.1 bar
Sensor material	
in contact with medium	dependent on version: PEEK, 1.4301 stainless steel, AISI 304, EPDM
not in contact with medium	dependent on version: 1.4301 stainless steel, AISI 304, PA6.6 GF30, PUR, FPM, CuZn
Process connection	
108	Screw connection G 1 1/2
110	Screw connection G 2
607	Taper socket for union nut DN 50 DIN 11851 (dairy compression fitting)
608	Taper socket for union nut DN 65 DIN 11851 (dairy compression fitting)
609	Taper socket for union nut DN 80 DIN 11851 (dairy compression fitting)
617	Clamping socket (clamp) 2 1/2" similar to DIN 32676
686	Varivent® connection DN 50/40
690	SMS DN 2"
Electrical connection	JUMO tecLine Ci type inductive conductivity sensors are suitable for connection to the transmitters JUMO AQUIS 500 Ci, JUMO CTI-750, and JUMO AQUIS touch S/P.
Connection circuit	fixed cable
Socket connector	M12
Socket material	CuZn, PA6.6 GF30, PUR
Cable material	Outer sleeve: PUR
Cable lengths	10 m (standard); 15 m; 20 m; 30 m (no other lengths are available)
Permissible temperature	-20 to +75 °C

[a] Usual application range from approx. 100 µS/cm.

[b] As defined by DIN 60751.

[c] As defined by EN 60529.

[d] **Note:** Temperature, pressure and sample medium affect the life of the sensor!

4 Technical data

4.2 Dimensions

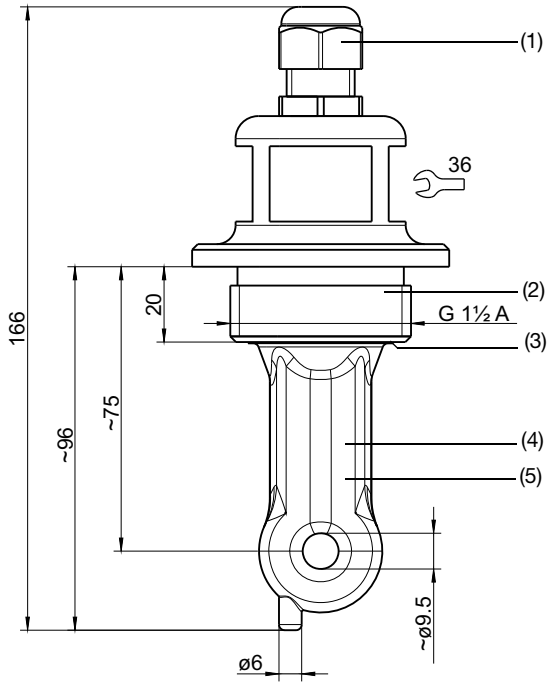

Type 202941/10-108-...
Screw connection G 1½

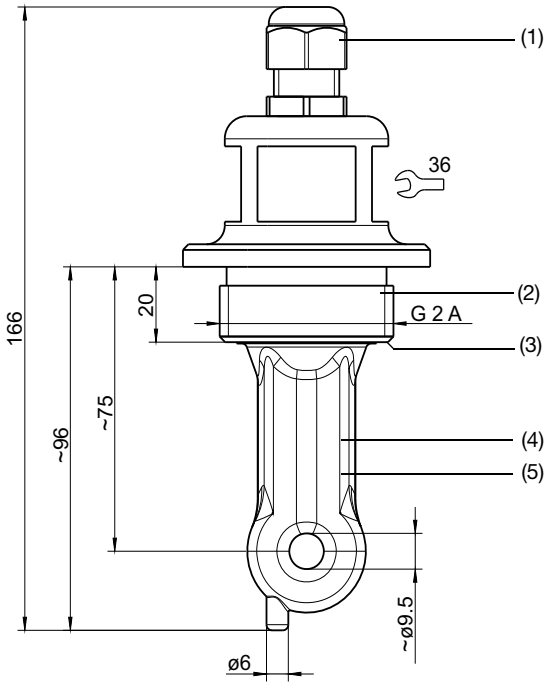

Type 202941/10-110-...
Screw connection G 2

(1) PA6, CR, NBR
(2) 1.4301 stainless steel, AISI 304
(3) EPDM
(4) PEEK
(5) Cell constant k = $5.0\,^{1}/_{cm}$

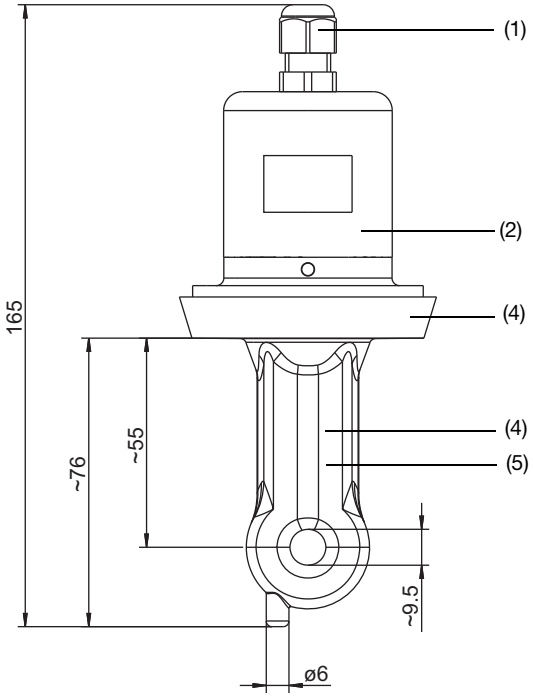

Type 202941/10-607-...
Taper socket with union nut DN 50 DIN 11851
(dairy compression fitting)

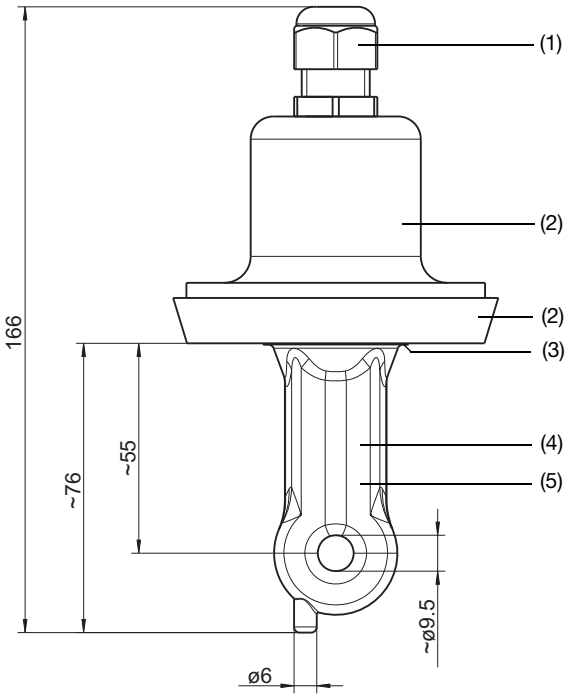

Type 202941/10-608-...
Taper socket with union nut DN 65 DIN 11851
(dairy compression fitting)

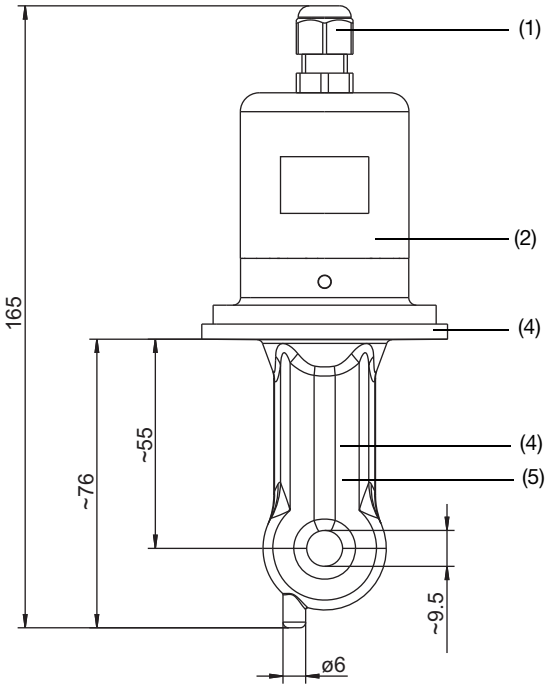

Type 202941/10-690-...
SMS DN 2"
(Union nut (< 200Nm) not included in delivery)

(1) PA6, CR, NBR
(2) 1.4301 stainless steel, AISI 304
(3) EPDM
(4) PEEK
(5) Cell constant k = $5.0\,^{1}/_{cm}$

4 Technical data

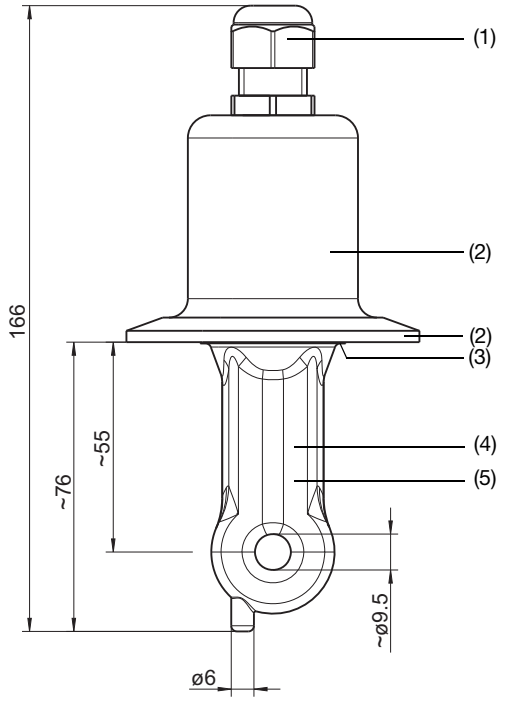

Type 202941/10-617-...
Clamping socket (clamp) 2½"

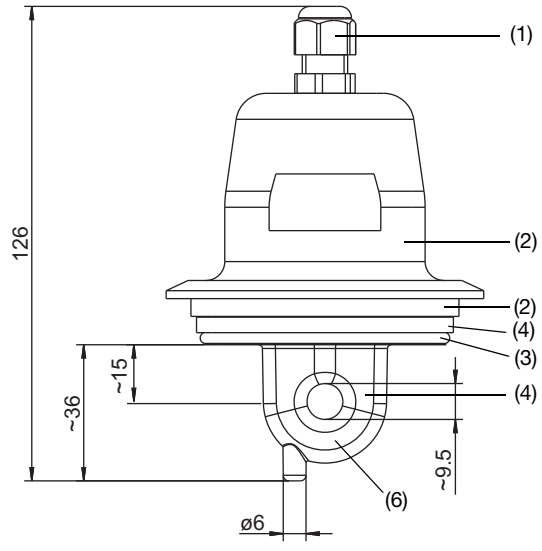

Type 202941/10-686-...
Varivent® connection DN 50/40

(1) PA6, CR, NBR
(2) 1.4301 stainless steel, AISI 304
(3) EPDM
(4) PEEK
(5) Cell constant k = $5.0\,^{1}/_{cm}$
(6) Cell constant k = $5.15\,^{1}/_{cm}$

5.1 Installation instructions

Caution

The ambient conditions (temperature, pressure, etc.,) must neither exceed not fall below the permitted range, See section 4 "Technical data", page 10.

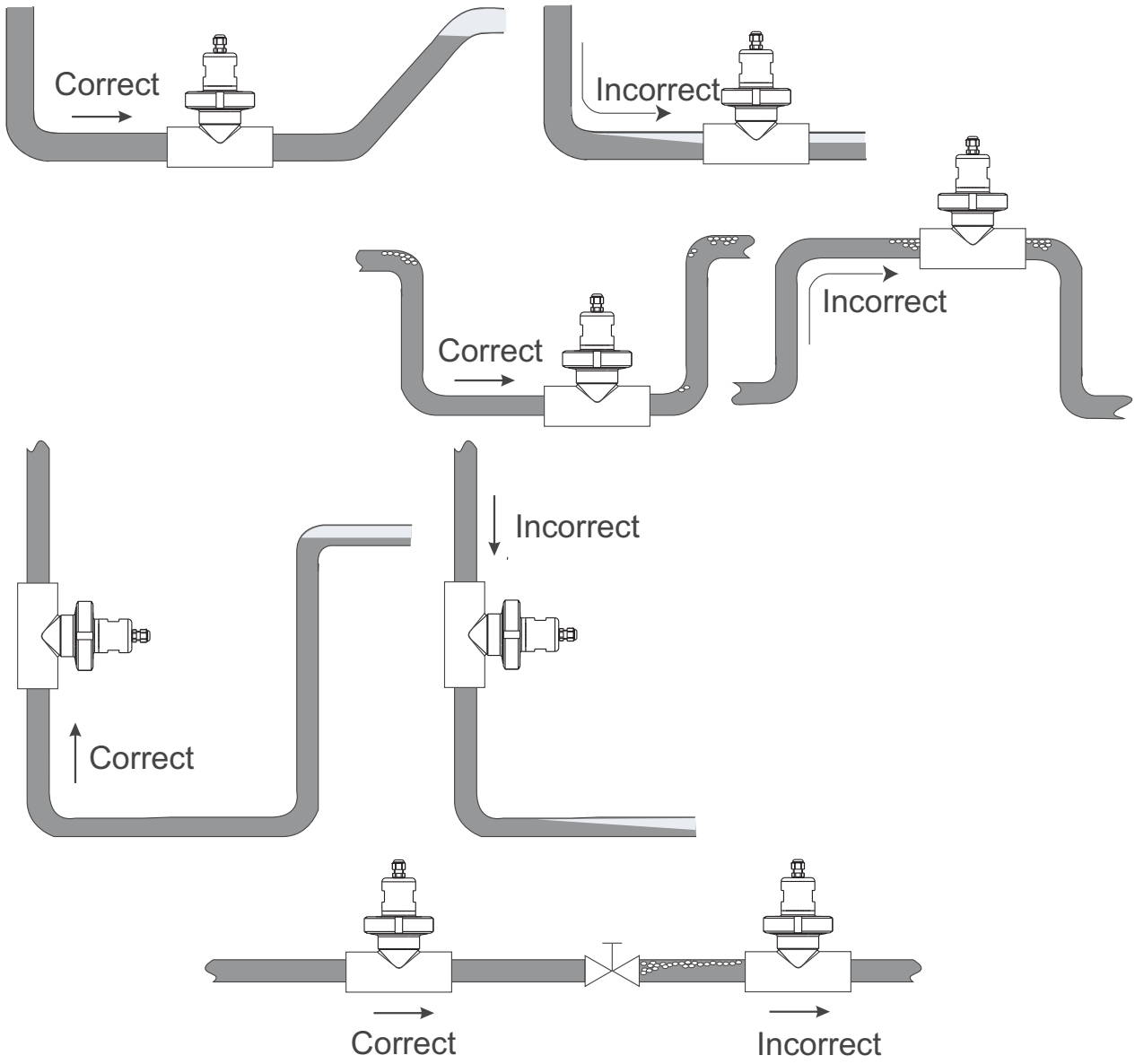

Avoid:

- gas bubble buildup
- dry-running
- flow separation
- turbulence

5 Mounting

5.2 Minimum distance to wall

Note

If the minimum distance has to be less than 18 mm, you are urgently advised to calibrate the "mounting factor" at the transmitter!

See the transmitter operating instructions.

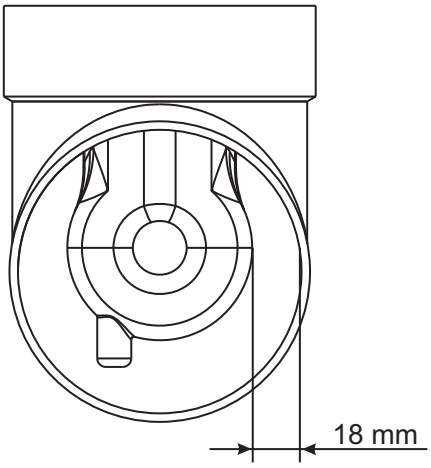

5.3 Installation in the flow direction

Caution

The circular mark (1) on the sensor body must point in the flow direction.

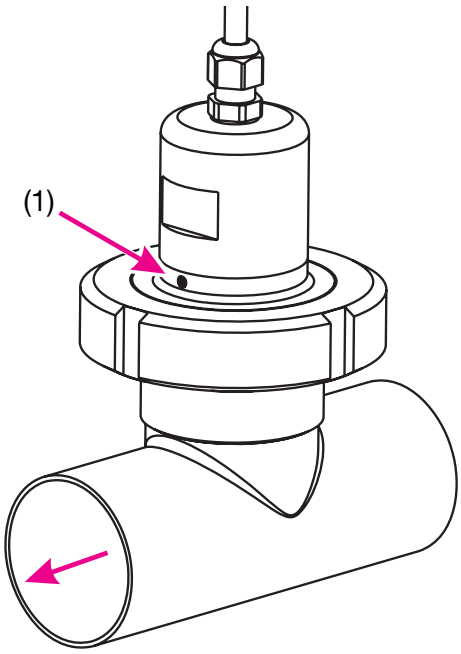

5.4 Mounting examples

Note

To be provided by the customer, not available from JUMO!

- T-pieces
- Weld-on threaded pipe adapter for the clamp
- Clamp ring
- Varivent® T-piece
- Varivent® clamp ring

Taper socket with union nut DN 50 DIN 11851 (dairy compression fitting), process connection 607

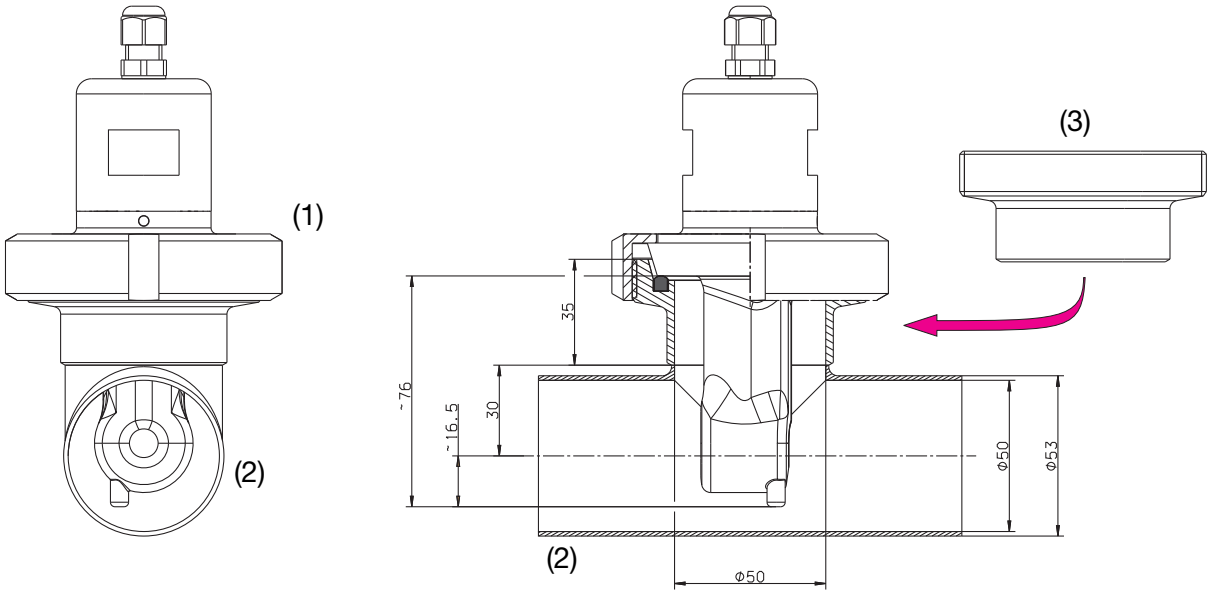

(1) DN50 groove nut, material 1.4301 / 304

(2) Reducing T-piece, DIN, short, SSS DN65/50 (e.g. material 1.4301 / 304 (not available from JUMO)

(3) Weld-on threaded pipe adapter, DIN 11851 DN 50 (mating component for process connection 607), part no.: 00085020

5 Mounting

2½" clamp, process connection 617

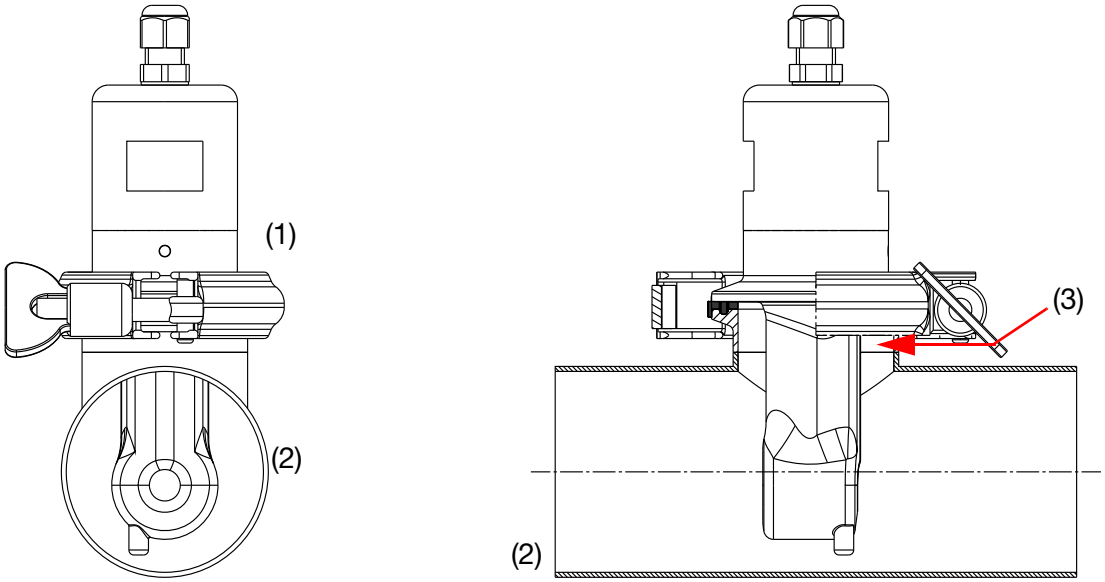

(1) Clamp ring (not available from JUMO)
(2) Reducing T-piece, DIN, short, SSS DN65/50 (e.g. material 1.4301 / 304 (not available from JUMO)
(3) Weld-on pipe adapter (not available from JUMO)

Varivent®, process connection 686

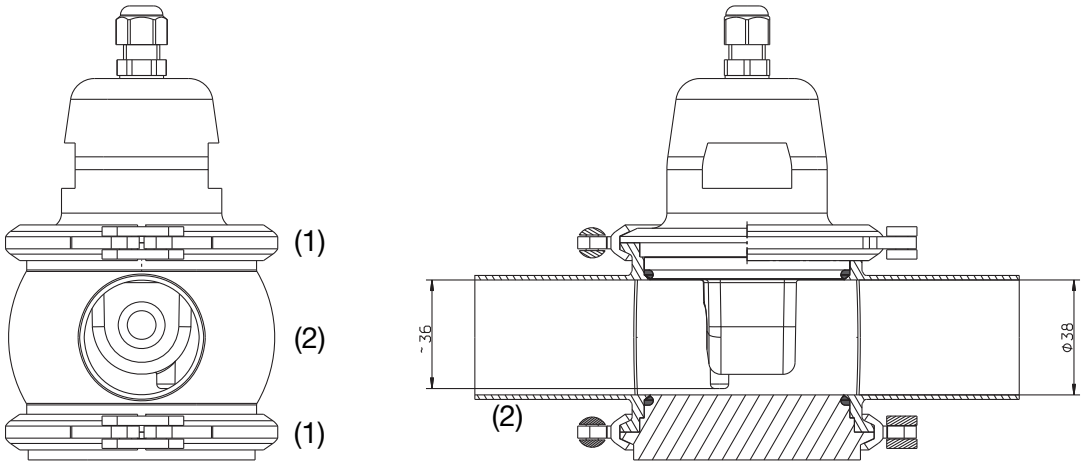

(1) Varivent® clamp ring (not available from JUMO)
(2) Varivent® T-piece, DN40, (e.g. material 1.4301 / 304 (not available from JUMO)

6.1 Electrical connection

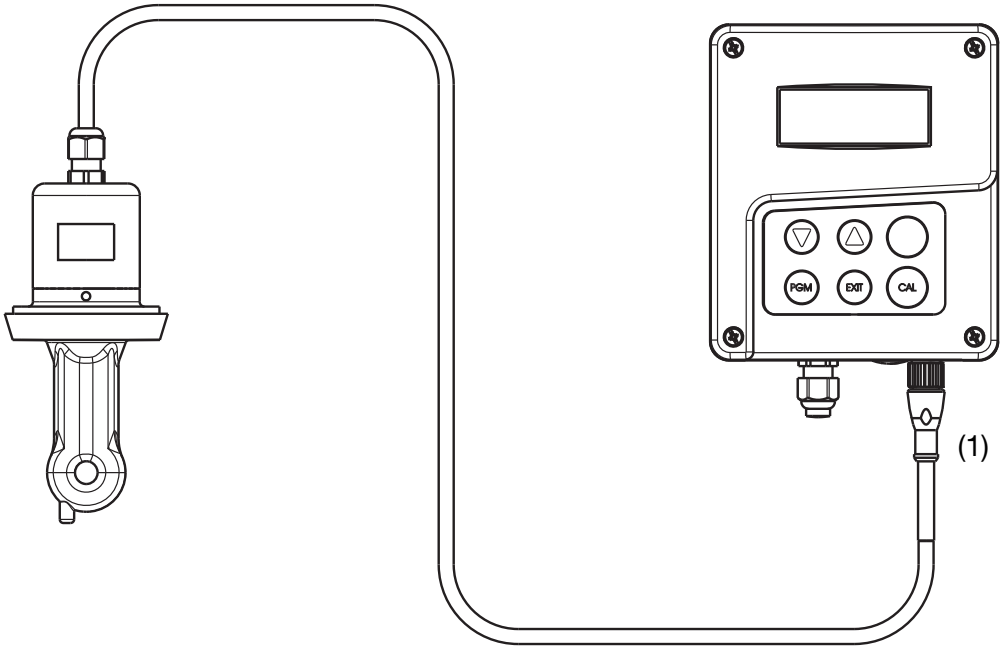

Insert the M12 connector (1) into the counterpart on the transmitter (example: JUMO AQUIS 500 Ci) and screw in place.

Caution

The connecting cable must not be shortened or mechanically damaged.

After it has been connected, the inductive conductivity and temperature sensor **must** be calibrated (see transmitter/controller operating manual).

7 Maintenance

7.1 Cleaning the device



Caution

Do not use solvents!

Stubborn coatings or deposits can be partly dissolved with dilute hydrochloric acid, for example, and then removed with a soft brush (such as a bottle brush).

Observe safety requirements!

8.1 Possible causes of faults

Problem	Possible cause	Action
No measurement display or actual value output 0 % (e.g. 4 mA)	There is no supply voltage	Check the power supply, check the terminals
Measurement display 000 or actual value output 0 % (e.g. 4 mA)	Sensor not immersed in medium; level in container too low	Top up the container
	Flow-through fitting is blocked	Clean the flow-through fitting
	Sensor is faulty	
Incorrect or fluctuating measurement display	Sensor not immersed deeply enough	Fill the container
	No mixing	Ensure proper mixing, make sure sensor is fully suffused approx. 18 mm all-round
	Air bubbles	Follow installation instructions

8.2 Device inspection



Note

The device is maintenance-free.

However, should measurement errors still occur and the cause be unknown, the complete measurement chain (sensor, connecting cable and transmitter/ controller) must be checked.

9 China RoHS

产品组别 Product group: 202941	产品中有害物质的名称及含量 China EEP Hazardous Substances Information					
部件名称 Component Name						
	铅 (Pb)	汞 (Hg)	镉 (Cd)	六价铬 (Cr(VI))	多溴联苯 (PBB)	多溴二苯醚 (PBDE)
外壳 Housing (Gehäuse)	○	○	○	○	○	○
过程连接 Process connection (Prozessanschluss)	○	○	○	○	○	○
螺母 Nuts (Mutter)	○	○	○	○	○	○
螺栓 Screw (Schraube)	○	○	○	○	○	○

本表格依据SJ/T 11364的规定编制。
This table is prepared in accordance with the provisions SJ/T 11364.
○：表示该有害物质在该部件所有均质材料中的含量均在GB/T 26572规定的限量要求以下。
Indicate the hazardous substances in all homogeneous materials' for the part is below the limit of the GB/T 26572.

×：表示该有害物质至少在该部件的某一均质材料中的含量超出GB/T 26572规定的限量要求。
Indicate the hazardous substances in at least one homogeneous materials' of the part is exceeded the limit of the GB/T 26572.

JUMO GmbH & Co. KG
Street address:
Moritz-Juchheim-Straße 1
36039 Fulda, Germany
Delivery address:
Mackenrodtstraße 14
36039 Fulda, Germany
Postal address:
36035 Fulda, Germany
Phone: +49 661 6003-0
Fax: +49 661 6003-607
Email: mail@jumo.net
Internet: www.jumo.net

JUMO Instrument Co. Ltd.
JUMO House
Temple Bank, Riverway
Harlow, Essex, CM20 2DY, UK
Phone: +44 1279 63 55 33
Fax: +44 1279 62 50 29
Email: sales@jumo.co.uk
Internet: www.jumo.co.uk

JUMO Process Control, Inc.
6733 Myers Road
East Syracuse, NY 13057, USA

Phone: +1 315 437 5866
Fax: +1 315 437 5860
Email: info.us@jumo.net
Internet: www.jumousa.com

