Process fittings

made of stainless steel
types 202825 and 202831



Operating Manual

20282500T90Z001K000

V2.00/EN/00713104/2019-10-17

Contents

1 Introduction 4

1.1 Safety information 4
1.1.1 General Information 4
1.1.2 Warning symbols 4
1.1.3 Note symbols 4
1.1.4 Intended use 4
1.2 Acceptance of goods, storage, and transport 5
1.2.1 Checking the delivery 5
1.2.2 Important information about storage and transport 5
1.2.3 Returning goods 5
1.2.4 Disposal 5
1.3 Description 6
1.4 Important information for use 6

2 Identifying the device version 7

2.1 Nameplate 7
2.2 Order details 8
2.3 Scope of delivery 8
2.4 Accessories 8

3 Mounting 9

3.1 Mounting site and climatic conditions 9
3.2 Dimensions 10
3.3 Mounting options 12
3.3.1 Type 202825 with taper socket process connection 13
3.3.2 Type 202825 with clamp process connection 13
3.3.3 Type 202831 for welding in 14
3.3.4 Type 202831 with process connection G 3/4 14

4 Maintenance 15

5 Technical data 16

6 China RoHS 17

1 Introduction

1.1 Safety information

1.1.1 General Information

This manual contains information that must be observed in the interest of your own safety and to avoid material damage. This information is supported by symbols which are used in this manual as indicated.

Please read this manual before starting up the device. Store this manual in a place that is accessible to all users at all times.

If difficulties occur during startup, please do not intervene in any way that could jeopardize your warranty rights!

1.1.2 Warning symbols



WARNING!

This symbol in connection with the signal word indicates that **personal injury** may occur if the respective precautionary measures are not carried out.

NOTICE!

This note in connection with the signal word indicates that **material damage or data loss** will occur if the respective precautionary measures are not taken.

1.1.3 Note symbols



NOTE!

This symbol refers to **important information** about the product, its handling, or additional benefits.



REFERENCE!

This symbol refers to **additional information** in other sections, chapters, or other manuals.



DISPOSAL!

At the end of its service life, the device and any batteries present do not belong in the trash! Please ensure that they are **disposed of** properly and in an **environmentally friendly** manner.

1.1.4 Intended use

Fittings are used to fasten and protect sensors (combination electrodes, metal electrodes, conductivity sensors, compensation thermometers, etc.).

1.2 Acceptance of goods, storage, and transport

1.2.1 Checking the delivery

- Ensure that the packaging and contents are not damaged
- Check the scope of delivery for completeness against the delivery documents and order details
- Inform the supplier immediately if there is any damage
- Keep damaged parts for clarification with the supplier

1.2.2 Important information about storage and transport

- Store the device in a dry, clean environment
- Observe the admissible environmental influences (⇨chapter 5 "Technical data", Page 16)
- Protect the device from shock during transport
- The original packaging provides optimum protection for storage and transport

1.2.3 Returning goods

- If repairs are needed, return the device in clean condition and in its entirety
- Please use the original packaging when returning the device

Accompanying letter for repair

Please include the completed covering letter for repair when returning goods. Remember to state the following:

- Description of the application
- Description of the error that has occurred

The covering letter can be found on the Internet at the following address:
http://productreturn.jumo.info

1.2.4 Disposal

Disposing of the device



DISPOSAL!

Devices and/or replaced parts should not be placed in the refuse bin at the end of their service life as they consist of materials that can be recycled by specialist recycling plants.

Dispose of the device and the packaging material in a responsible and environmentally-friendly manner.

For this purpose, observe the country-specific laws and regulations for waste treatment and disposal.

Disposing of the packaging material

All packaging material is recyclable.

1 Introduction

1.3 Description

Process fittings made of stainless steel are used to fasten and protect sensors.

They can be mounted directly into existing stainless steel pipe systems or in tank/vessel walls.

Fittings of type 202825 are predominantly installed in process engineering plants where higher hygienic requirements need to be met. The parts coming into contact with the medium and the sealing materials used meet the FDA (Food and Drug Administration) requirements.

Fittings of type 202831 are mainly used in water/process technology. Both fitting types are intended for the installation of sensors with a length of 120 mm. Other lengths are available upon request.

Additional fittings

Fitting type	Data sheet
Flow fittings	202810
Fittings for membrane-covered sensors	202811
Immersion fittings	202820, 202821
Retractable fittings	202822
Pneumatic retractable fittings	202823

1.4 Important information for use



WARNING!

Escaping measurement medium

If the connection to the measurement medium is open, there is a risk of injury from high temperatures, high pressure, or corrosive substances.

- ▶ Only mount the fitting when the containers or pipes are depressurized.
- ▶ Wear suitable protective clothing such as gloves, goggles, or the like to protect yourself against injury.

NOTICE!

Loss of guarantee cover

Inadmissible interventions on the fitting may render the guarantee null and void.

- ▶ Please observe the necessary actions set out in this operating manual.
- ▶ If you experience difficulties during startup, please contact the supplier.
- ▶ Any applications not listed in this operating manual must be agreed with the manufacturer and confirmed in writing.



NOTE!

Fittings must be easily accessible in order to enable regular maintenance and checks on the sensors. If measurements are taken under pressure, counter pressure in the reference system must be ensured or a pressure resistant sensor version must be used.

2.1 Nameplate

Position

Depending on the type, the nameplate is affixed either on the stainless steel case above the process connection or on the protective cap.



Table of contents

The nameplate contains important information. This includes:

Description	Designation on the nameplate	Example
Device type	Type	202825/607-26
Fabrication number	F no.	1234567801018460001

Device type (Typ)

Compare the specifications on the nameplate with your order documents. The supplied device version can be identified using the order code in the following section "Order details".

Fabrication number (F no.)

The fabrication number provides information such as the **production date** (year/week). The figures in question are in positions 12, 13, 14, and 15 (from the left).

Example: F no. = 123456780101**846**001. The device was produced in the year 20**18** and in week **46**.

2 Identifying the device version

2.2 Order details

	(1)	**Basic type**
202825		Process fittings made of stainless steel for use in substances with higher hygienic requirements
202831		Process fittings made of stainless steel for use in water and process technology
	(2)	**Process connection**
000		None
105		Screw connection G 3/4
607		Taper socket with union nut DN 50 DIN 11851 (dairy pipe fitting)
613		Clamping socket (clamp) DN 25 DIN 32676
616		Clamping socket (clamp) DN 50 DIN 32676 (2" ISO 2852)
688		Screw connection G 1 1/4
	(3)	**Material**
24		Parts coming into contact with the medium are made of stainless steel 1.4404 (AISI 316L) (special version)
26		Parts coming into contact with the medium are made of stainless steel 1.4571 (standard material)

	(1)		**(2)**		**(3)**
Order code		-		-	
Order example	202825	-	607	-	26

2.3 Scope of delivery

- Process fitting made of stainless steel in the ordered version
- Operating manual 202825 for the types 202825 and 202831

2.4 Accessories

Designation		**Part no.**
KCl storage vessel, pressure resistant	Product group 209791	00060254
Complete mounting bracket for KCl storage vessel		00455706
Welded socket no. 1 for process connection 688[a]		00489164
Welded socket no. 3 for process connection 688[a]		00378208

[a] Also see the drawing on page 11.

3.1 Mounting site and climatic conditions

Basic information

The fittings should be installed in an easily accessible location that is exposed to minimal vibrations.

The admissible process temperature for the fittings is 0 to 135 °C.

NOTE!

Please also note any heat radiation from the surrounding environment and the admissible ambient temperature of the sensor being used!

WARNING!

Escaping measurement medium

If the connection to the measurement medium is open, there is a risk of injury from high temperatures, high pressure, or corrosive substances.

- ▶ Only mount the fitting when the containers or pipes are depressurized.
- ▶ Wear suitable protective clothing such as gloves, goggles, or the like to protect yourself against injury.

Installation position

While in principle any installation position can be chosen, the location also depends on the sensor being used.
Combination electrodes, for example, need to be installed vertically. The angle may not exceed 80° from vertical.

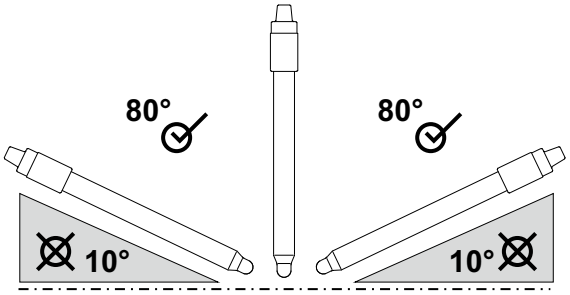

Protection type

The protection type of the fittings is in principle IP65, but it also depends on the sensor installed.

Mounting a sensor in the fitting

NOTICE!

Damage to the sensor

If too high a tightening torque is applied when installing the sensor in the fitting, the sensor could be destroyed.

- ▶ When installing the sensor in the fitting, **do not** exceed the maximum tightening torque of **3 Nm**.

3.2 Dimensions

Type 202825-000
without process connection (welded version)

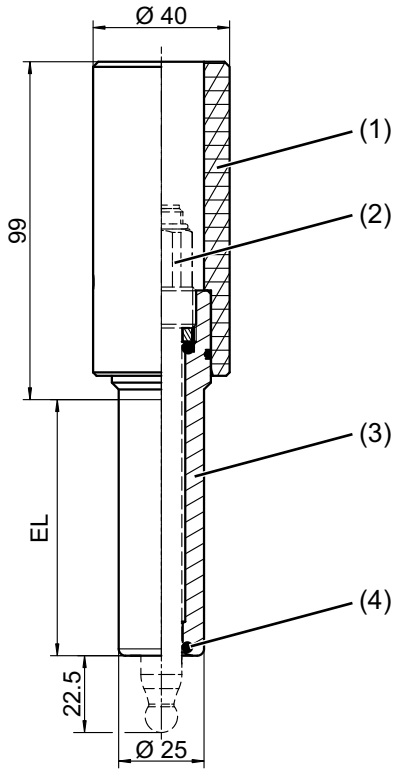

EL (insertion length) max. 75 mm

Type 202825-607-26
Taper socket process connection

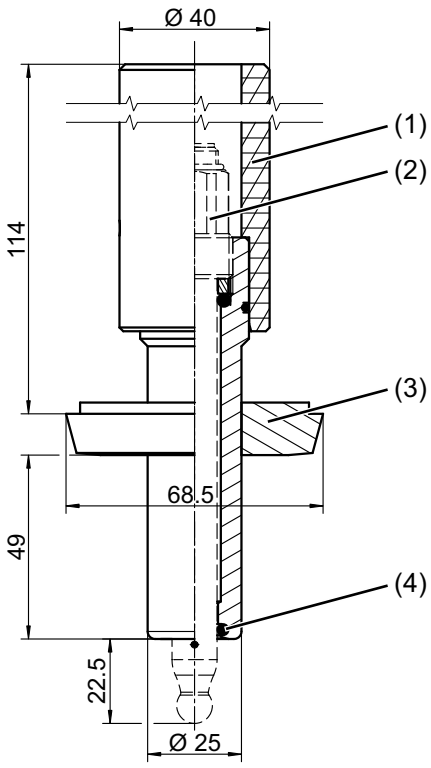

(1) PP (polypropylene) protective cap
(2) Electrode (not included in the scope of delivery)
(3) Process connection
(4) O-ring, silicone (FDA compliant material)

Type 202825-616-26, type 202825-613-26
Clamp process connection

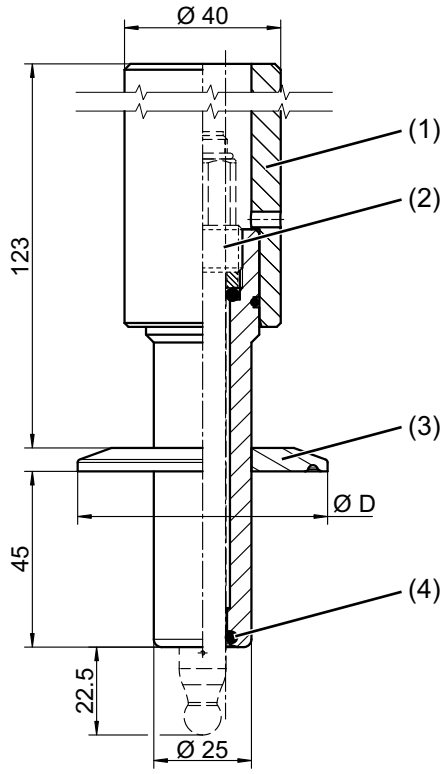

DN 50, Ø D = 64.0 mm
DN 25, Ø D = 50.5 mm

Type 202825-688-26
Process connection G 1 1/4 (ingold socket)

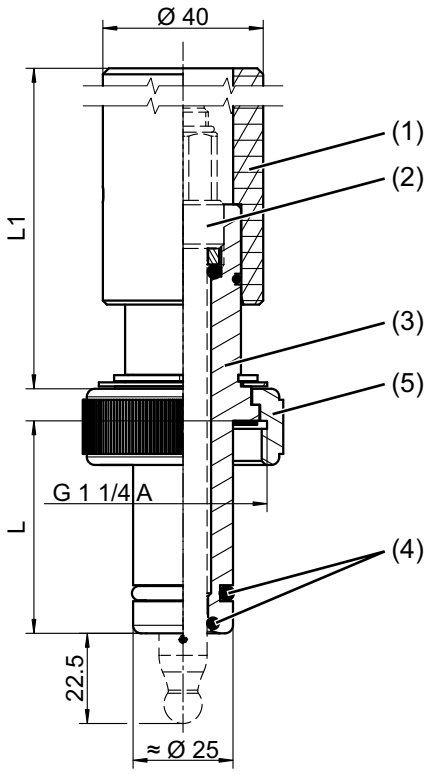

L = 33.5 mm; L1 = 132 mm
in conjunction with welded socket 3
L = 53.0 mm; L1 = 113 mm
in conjunction with welded socket 1

(1) PP (polypropylene) protective cap
(2) Electrode (not included in the scope of delivery)
(3) Process connection
(4) O-ring, silicone (FDA compliant material)
(5) Union nut

Welded socket for process connection G 1 1/4 (ingold socket)

Welded socket 1

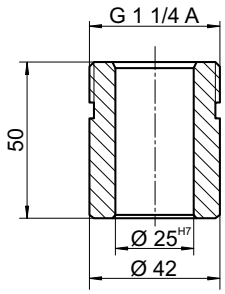

Part no.: 00489164

Welded socket 3

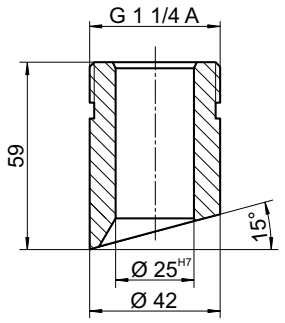

Part no.: 00378208

Type 202831-000-26
without process connection (welded version)

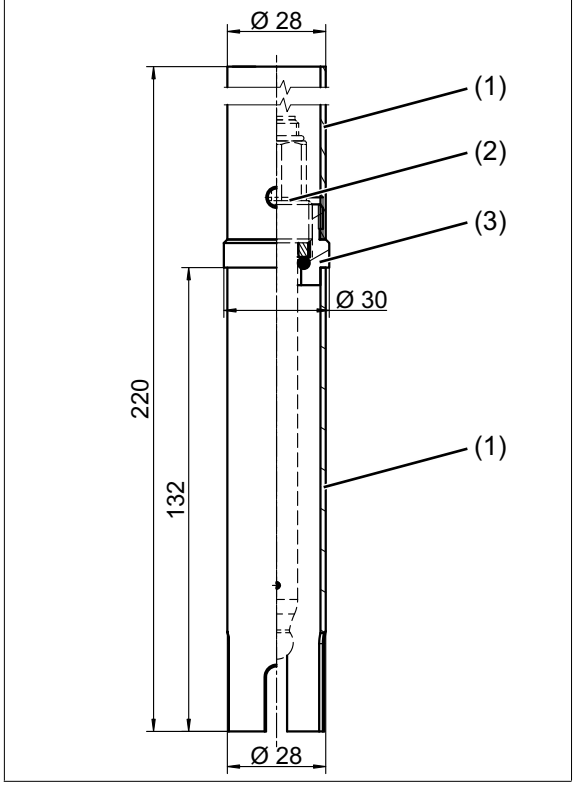

Type 202831-105-26
Process connection G 3/4

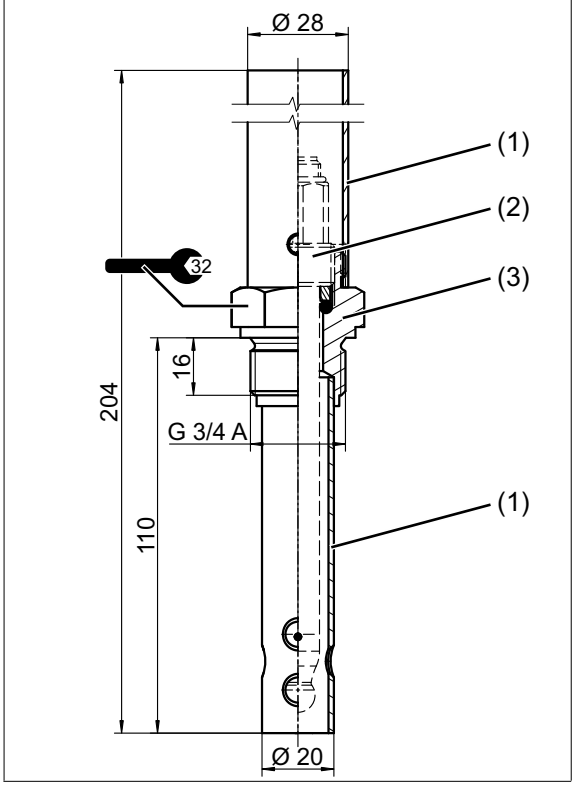

(1) Protection tube (stainless steel)
(2) Electrode (not included in the scope of delivery)
(3) Process connection

3.3 Mounting options

WARNING!

Escaping measurement medium

If the connection to the measurement medium is open, there is a risk of injury from high temperatures, high pressure, or corrosive substances.

- ▶ Only mount the fitting when the containers or pipes are depressurized.
- ▶ Wear suitable protective clothing such as gloves, goggles, or the like to protect yourself against injury.

NOTE!

When installing the fittings in the process environment and when installing the sensors in the fittings, always make sure that the thread and sealing rings are clean!

3.3.1 Type 202825 with taper socket process connection

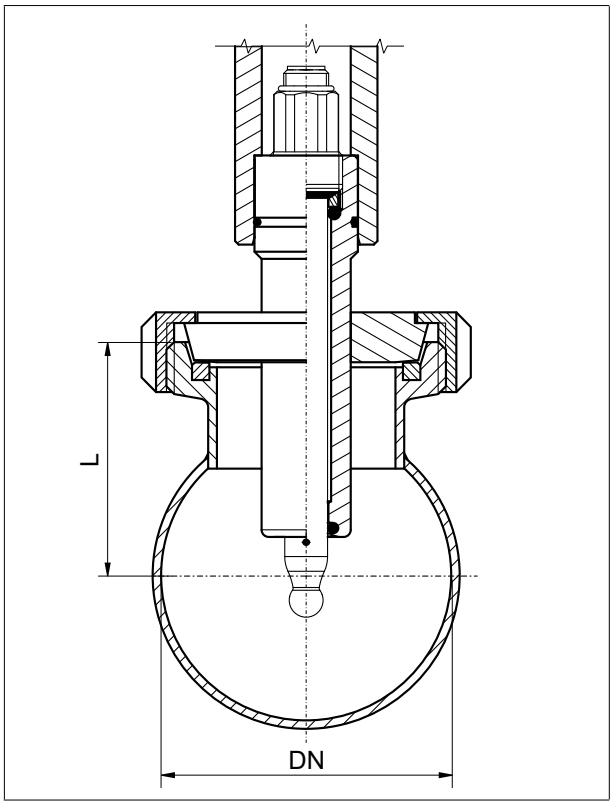

DN 50	DN (pipe)	L (installation dimension)
	DN 50	63 mm
	DN 65	52 mm
	DN 80	63 mm
	DN 100	75 mm
	DN 125	90 mm

3.3.2 Type 202825 with clamp process connection

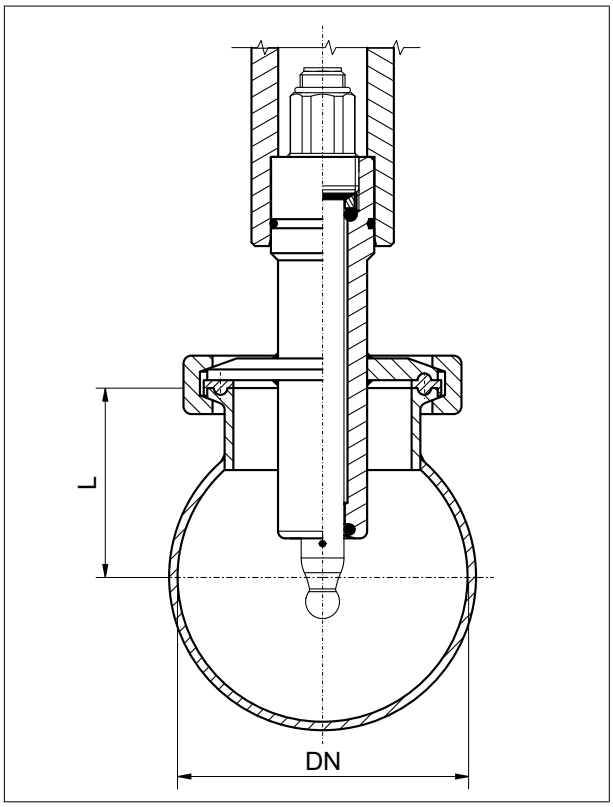

DN 25	DN (pipe)	L (installation dimension)
	DN 40	58 mm
	DN 50	50 mm
	DN 65	50 mm
	DN 80	58 mm
	DN 100	68 mm
	DN 125	81 mm

DN 50	DN (pipe)	L (installation dimension)
	DN 50	51 mm
	DN 65	40 mm
	DN 80	51 mm
	DN 100	63 mm
	DN 125	77 mm

3.3.3 Type 202831 for welding in

1. Weld the fitting on the welded collar (3) into a drilled hole with Ø 30 mm. There must be no electrodes screwed into the fitting when doing so!
2. Unscrew the protective cap (1) from the fitting.
3. Ensure that the sliding disk and the O-ring of the sensor have been pushed onto its shaft.
4. In the case of sensors with a fixed cable:
   a) Guide the sensor through the protective cap.
   b) Screw the sensor into the electrode holder (2). When doing so, please observe the maximum tightening torque of 3 Nm.
5. In the case of sensors with a plug or screw head:
   a) Screw the sensor into the electrode holder (2). When doing so, please observe the maximum tightening torque of 3 Nm.
   b) Guide the connecting cable with cable socket through the protective cap.
   c) Screw the cable socket onto the head of the sensor.
6. Screw the protective cap onto the fitting.

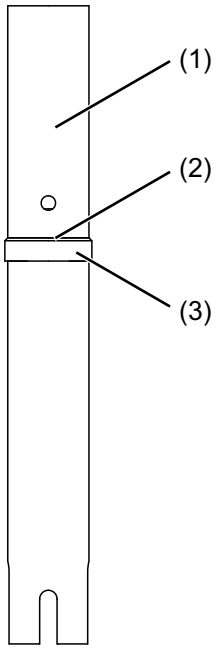

3.3.4 Type 202831 with process connection G 3/4

1. Screw the fitting into a threaded drilled hole G 3/4.
2. Unscrew the protective cap (1) from the fitting.
3. Ensure that the sliding disk and the O-ring of the sensor have been pushed onto its shaft.
4. In the case of sensors with a fixed cable:
   a) Guide the sensor through the protective cap.
   b) Screw the sensor into the electrode holder (2). When doing so, please observe the maximum tightening torque of 3 Nm.
5. In the case of sensors with a plug or screw head:
   a) Screw the sensor into the electrode holder (2). When doing so, please observe the maximum tightening torque of 3 Nm.
   b) Guide the connecting cable with cable socket through the protective cap.
   c) Screw the cable socket onto the head of the sensor.
6. Screw the protective cap onto the fitting.

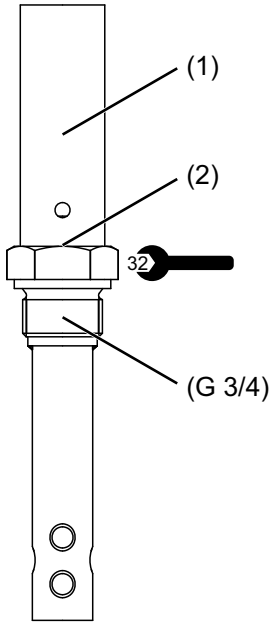



WARNING!

Escaping measurement medium

If the connection to the measurement medium is open, there is a risk of injury from high temperatures, high pressure, or corrosive substances.

- ▶ Only perform maintenance work on the fitting when the containers or pipes are depressurized.
- ▶ Wear suitable protective clothing such as gloves, goggles, or the like to protect yourself against injury.

Clean the fitting at regular intervals. The frequency of cleaning and cleaning agents used depend on the type and level of dirt.

Lubricate the O-rings with Vaseline or similar (depending on the measurement medium) each time after opening the screw connections and check the sealing surfaces for damage.



NOTE!

Damaged sealing surfaces or O-rings can lead to liquid ingress into the fitting!

5 Technical data

	Type 202825	Type 202831
Materials		
Parts coming into contact with the medium	Stainless steel 1.4571, electropolished, $R_a \leq 0.80$ (standard) Stainless steel 1.4404 (optional extra)	Stainless steel 1.4571
Seal	O-ring made of silicone, FDA compliant	O-ring made of silicone, FDA compliant
Admissible temperature[a]	0 to 135 °C	
Pressure resistance[a]	10 bar at 25 °C	
Electrode holder	Screw connection Pg13.5[b]	
Insertion length	⇨ chapter 3.2 "Dimensions", Page 10 and chapter 3.3 "Mounting options", Page 12	
Protection type	IP65	
Weight	depending on the process connection	approx. 0.6 kg

[a] Please also observe the admissible operating data of the sensor being used.

[b] It is possible to install an impedance converter (type 202995) or a two-wire transmitter (JUMO digiLine pH with analog output, type 202705).

产品组别 Product group: 202825	产品中有害物质的名称及含量 China EEP Hazardous Substances Information					
部件名称 Component Name						
	铅 （Pb）	汞 （Hg）	镉 （Cd）	六价铬 （Cr(VI)）	多溴联苯 （PBB）	多溴二苯醚 （PBDE）
外壳 Housing (Gehäuse)	○	○	○	○	○	○
过程连接 Process connection (Prozessanschluss)	○	○	○	○	○	○
螺母 Nuts (Mutter)	○	○	○	○	○	○
螺栓 Screw (Schraube)	○	○	○	○	○	○

本表格依据SJ/T 11364的规定编制。
This table is prepared in accordance with the provisions SJ/T 11364.
○：表示该有害物质在该部件所有均质材料中的含量均在GB/T 26572规定的限量要求以下。
Indicate the hazardous substances in all homogeneous materials' for the part is below the limit of the GB/T 26572.

×：表示该有害物质至少在该部件的某一均质材料中的含量超出GB/T 26572规定的限量要求。
Indicate the hazardous substances in at least one homogeneous materials' of the part is exceeded the limit of the GB/T 26572.

JUMO GmbH & Co. KG
Street address:
Moritz-Juchheim-Straße 1
36039 Fulda, Germany
Delivery address:
Mackenrodtstraße 14
36039 Fulda, Germany
Postal address:
36035 Fulda, Germany
Phone: +49 661 6003-0
Fax: +49 661 6003-607
Email: mail@jumo.net
Internet: www.jumo.net

JUMO Instrument Co. Ltd.
JUMO House
Temple Bank, Riverway
Harlow, Essex, CM20 2DY, UK
Phone: +44 1279 63 55 33
Fax: +44 1279 62 50 29
Email: sales@jumo.co.uk
Internet: www.jumo.co.uk

JUMO Process Control, Inc.
6733 Myers Road
East Syracuse, NY 13057, USA
Phone: +1 315 437 5866
Fax: +1 315 437 5860
Email: info.us@jumo.net
Internet: www.jumousa.com