Quick-change fittings

for sensors
type 202822



Operating Manual

20282200T90Z002K000

V2.00/EN/00373276



NOTE!

Please read this operating manual before starting up the instrument. Keep the operating manual in a place which is accessible to all users at all times. Please assist us to improve this operating manual. Your suggestions will be appreciated

All the necessary settings are described in this manual. However, if any difficulties should still arise during start-up, please do not carry out any unauthorized manipulations. You could endanger your rights under the instrument warranty!

Contents

1 Introduction

1.1 Typographical conventions 4

1.2 Device description 5

2 Identifying the device version

2.1 Nameplate 6

2.2 Order details 6

3 Installation

3.1 Location 7

3.1.1 Positioning the sensor pocket in the pipeline 8

3.2 Function / operation 9

4 Appendix

4.1 Technical data 11

4.2 Dimensions 12

4.3 Maintenance and cleaning 17

5 China RohS

1 Introduction

1.1 Typographical conventions



Danger

This sign is used when there may be **danger to personnel** if the instructions are disregarded or not followed accurately!



Caution

This sign is used when there may be **damage to equipment or data** if the instructions are disregarded or not followed accurately!



Note

This sign is used when your **special attention** is drawn to a remark.



Reference

This sign refers to **further information** in other manuals, chapters or sections.

abc[1]

Footnote

Footnotes are notes which **refer to certain points** in the text.

✱

Action

This sign indicates that an **action to be performed** is described.

The individual steps are indicated by this asterisk, e.g.

✱ Unscrew crosspoint screws

1.2 Device description

Quick-change fitting

Quick-change fittings that can be operated manually enable the installation and removal of the sensor under process conditions, i. e. without interrupting the appropriate cycle or main flow.

Typical applications

- Measurements in closed liquid cycles,
  e.g. pH measurement in cooling and waste-water plants
- Measurements in closed containers and tanks
- pH final check in the outflow, in cases where a bypass is not possible

Suitable sensors

e.g. pH, redox, conductivity sensors, compensation thermometers with 12 mm max. shaft diameter and a Pg13.5 screw-in thread.

- Sensor length 120 mm, for Type 202822/105-62-..
- Sensor length 120 mm, for Type 202822/613-48-26
- Sensor length 225 mm, for Type 202822/106-135-..

2 Identifying the device version

2.1 Nameplate

Location

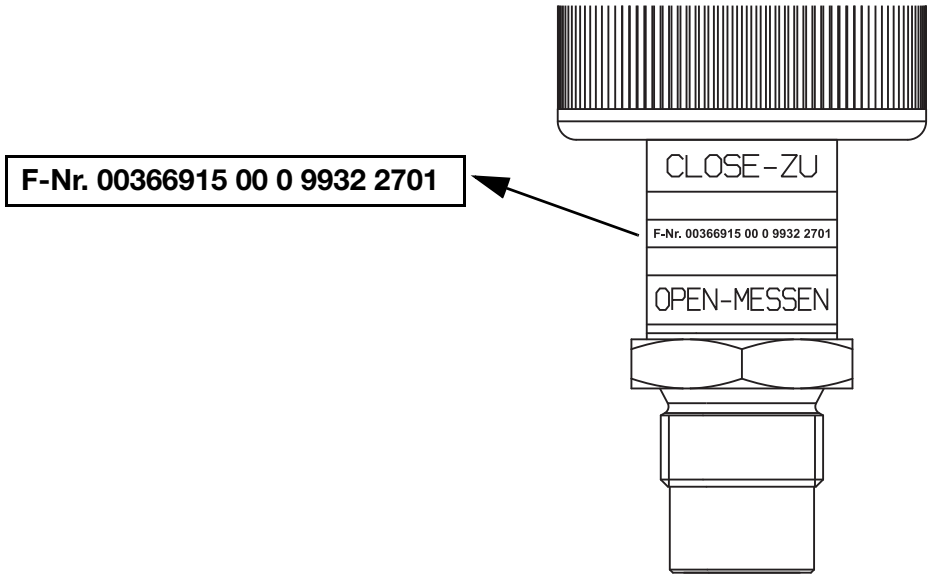

The nameplate is affixed to the screw-in sleeve.

2.2 Order details

				(1)	**Basic type**
			202822		manual quick-change fitting
				(2)	**Process connection**
			105		screw-in thread G 3/4 A (3/4" pipe) for electrodes with a mounting length of 120 mm
			106		screw-in thread G 1 A (1" pipe) for electrodes with a mounting length of 225 mm
			613		clamp connection DN25 for electrodes with a mounting length of 120 mm
				(3)	**Mounting length**
		x	48		048 mm
x			62		062 mm
	x		135		135 mm
				(4)	**Material**
x	x	x	26		stainless steel 1.4571
x	x		87		polypropylene (PP)

x = available

	(1)		(2)		(3)		(4)
Order code	202822	/	...	-	...	-	...
Order example	202822	/	105	-	62	-	26

3 Installation

3.1 Location

Basics

The location should be easily accessible and free from vibration.
Permissible ambient temperature for fittings in

stainless steel: -30 to +135 °C
PP: -10 to + 60 °C

Note possible radiated heat!



Warning

The quick-change fitting must be depressurized before assembling or disassembling!

Depending on the application, any liquid that may run out could be corrosive!

Operating position

The operating position is generally unrestricted, but depends on the individual sensor.

Earthing

Depending on the installation, it may be necessary to **earth the quick-change fitting!**

Earthing screws, see chapter 4.2 „Dimensions“

The earthing screw is omitted on versions in PP!

Protection

The protection depends on the individual sensor.

Admissible ambient temperature

The ambient temperature depends on the sensor that is used!

3.1.1 Positioning the sensor pocket in the pipeline

- ✱ Unscrew protective cap (1).
- ✱ Release grub screw (2) using a 2 mm hexagon socket wrench (included in delivery), take off ring (3).
- ✱ Unscrew union nut (4) by hand.
- ✱ Release grub screw (6) in the setting ring (7) using a 2mm hexagon socket wrench.
- ✱ Position electrode pocket (5) parallel to the flow-through system (see surface marking).
- ✱ Assemble quick-change fitting in reverse order.

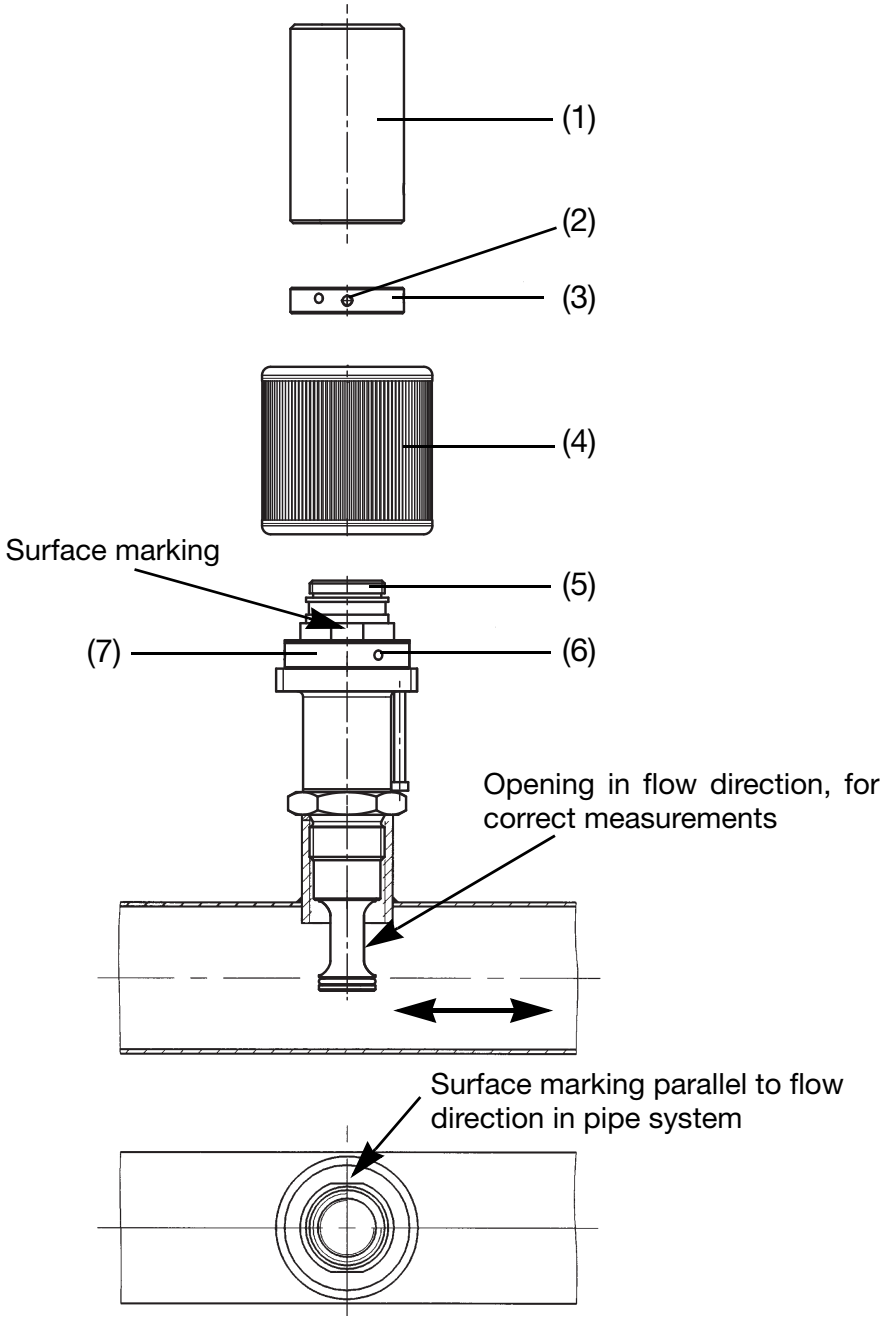

3.2 Function / operation

Turning the union nut X moves the sensor within the quick-change fitting.

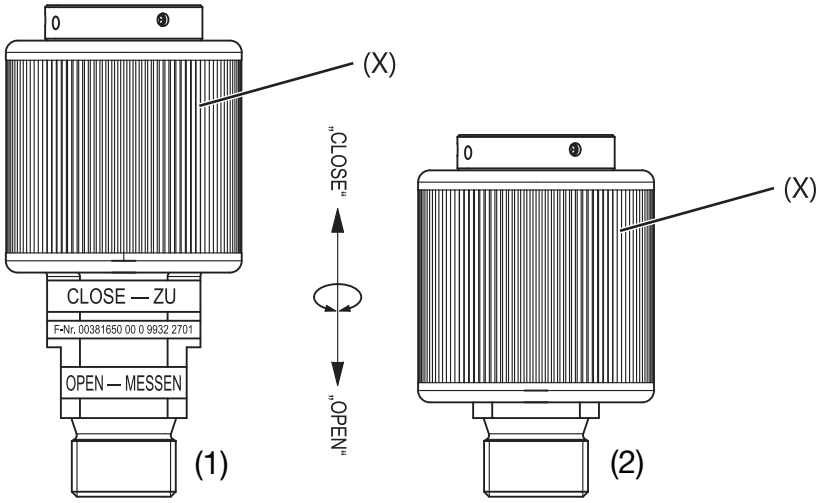

Install/remove sensor

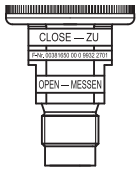

Position „CLOSE-ZU“ (1)

✱ Turn the union nut X to the right, up to the stop.
When the marking “CLOSE-ZU” becomes visible, looking at the quick-change fitting from the side, the sensor can be removed.

Caution

Take all the necessary precautions when removing the sensor! If the union nut X can only be removed by using considerable force, or the end stop cannot be reached (marking “CLOSE-ZU” not wholly visible), then blockages or dirt deposits at the sensor/protective basket may be the reason. The pipeline system has to be locked or depressurized, or the container has to be emptied to below the installation level of the fitting. The fitting then has to be completely de-installed and serviced, see chapter 4.3 “Maintenance and cleaning”
The maximum tightening torque (3 Nm) has to be observed when installing the sensor!

Measurement mode

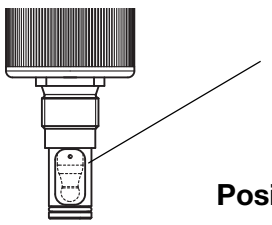

Position „OPEN-MESSEN“ (2)

✱ Turn the union nut X to the left, up to the stop.
The protective basket of the fitting is immersed in the liquid together with the sensor. On correct and unimpeded immersion of the protective basket the marking “OPEN-MESSEN” below the union nut X will disappear.

Type 202822/106-135-26
Type 202822/106-135-87

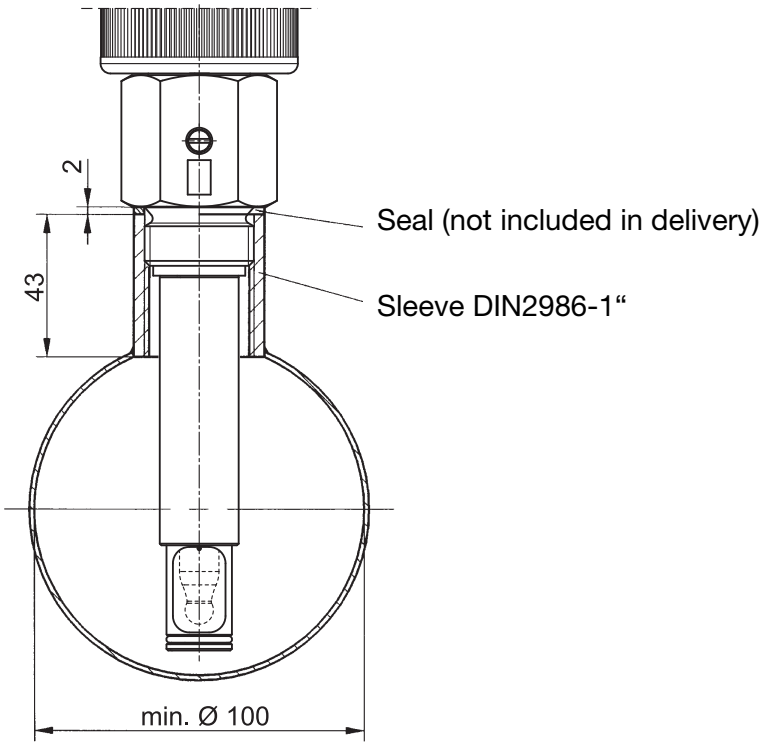

Note

With smaller flow-through pipe diameters, a correspondingly longer DIN 2986-1 sleeve must be selected.

Type 202822/105-62-26
Type 202822/105-62-87

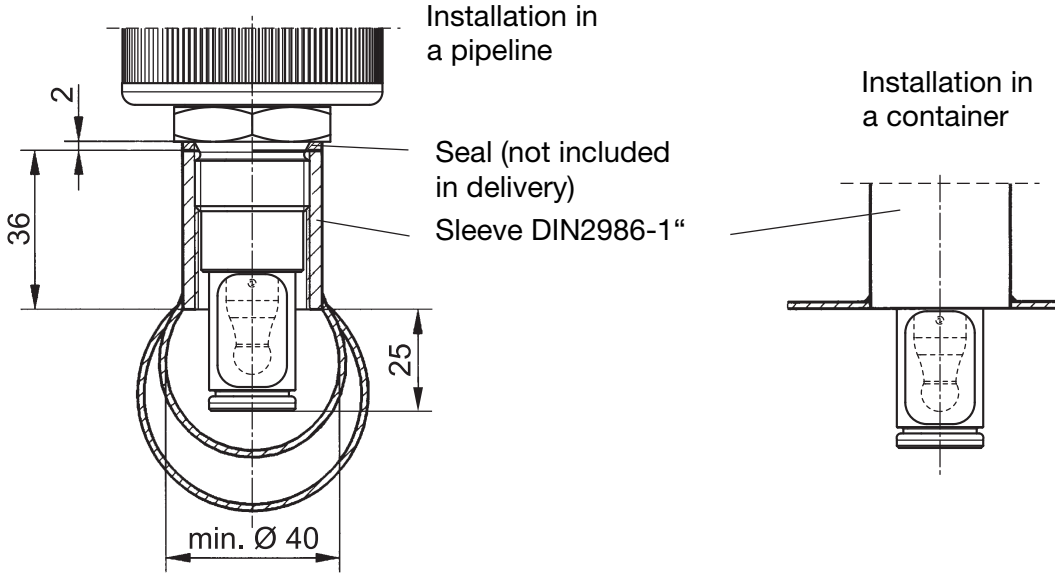

4 Appendix

4.1 Technical data

Quick-change fitting

Parts in contact with the medium	stainless steel 1.4571, FPM or PP, FPM
Dimensions	see chapter 4.2 "Dimensions"
max. temperature [a]	-30 to +135 °C (stainless steel) -10 to +60 °C (PP)
max. pressure[a]	10 bar (stainless steel) 6 bar (PP)
Material of seal	FPM
Operating position [a]	unrestricted
Protection type[a]	IP65
Weight	Type 202822/105-62-26 = 0.8 kg Type 202822/106-135-26 = 1.0 kg Type 202822/613-48-26 = 1.2 kg

[a] Please also note the max. operating data and installation instructions for the sensor that is used!

4.2 Dimensions

Type 202822/105-062-26

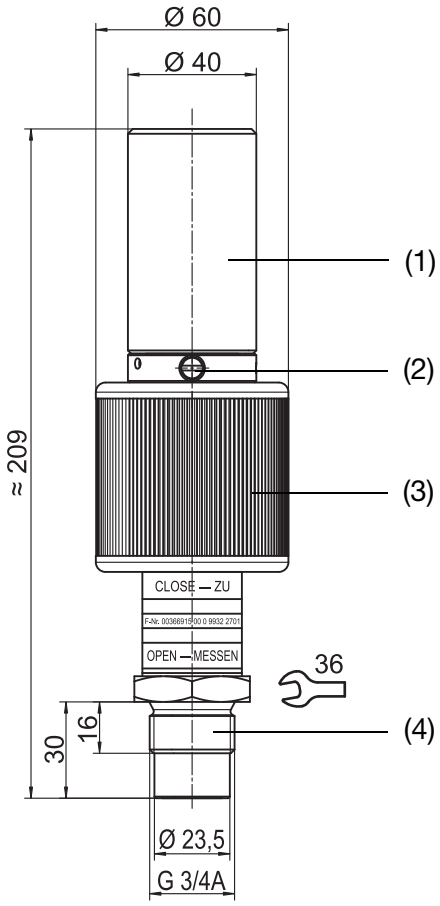

Position: "Service, install/remove sensor"

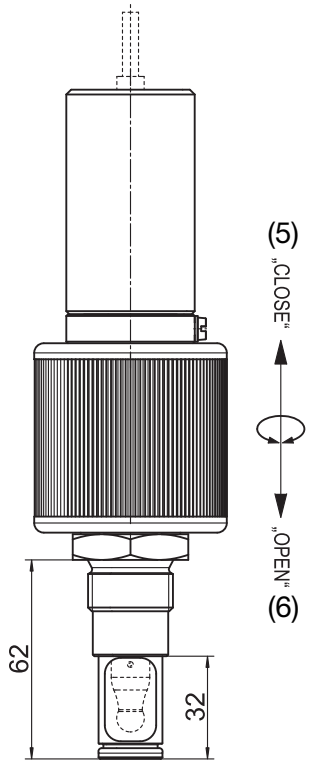

Position "Measurement"

(1) Protective cap, PP
(2) Grounding screw
(3) Union nut, PP
(4) Connection G 3/4 A, stainless steel
(5) Closed
(6) Open

4 Appendix

Type 202822/105-062-87

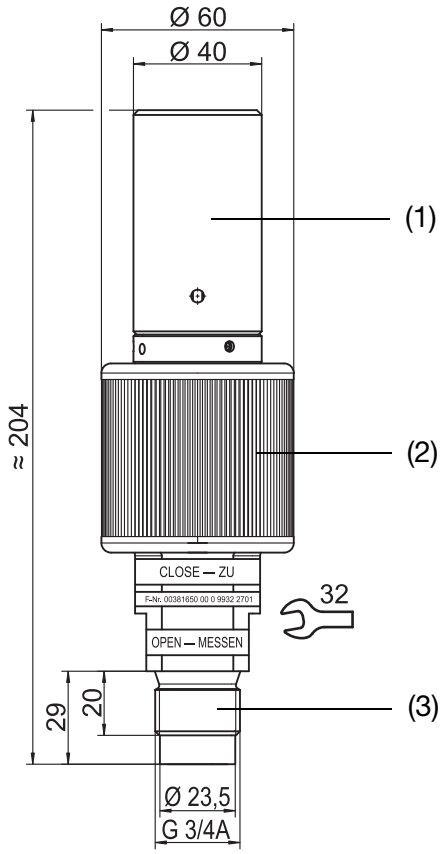

Position: "Service, install/remove sensor"

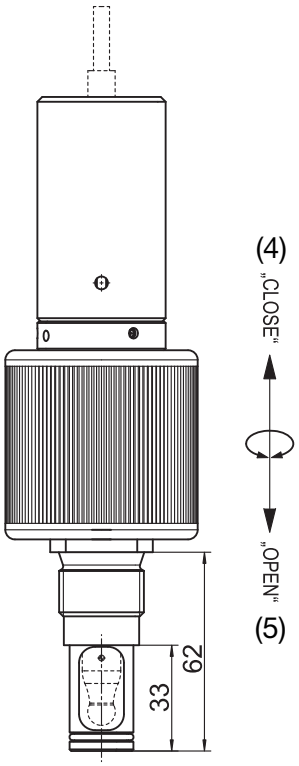

Position "Measurement"

(1) Protective cap, PP
(2) Union nut, PP
(3) Connection G 3/4 A, PP
(4) Closed
(5) Open

Type 202822/106-135-26

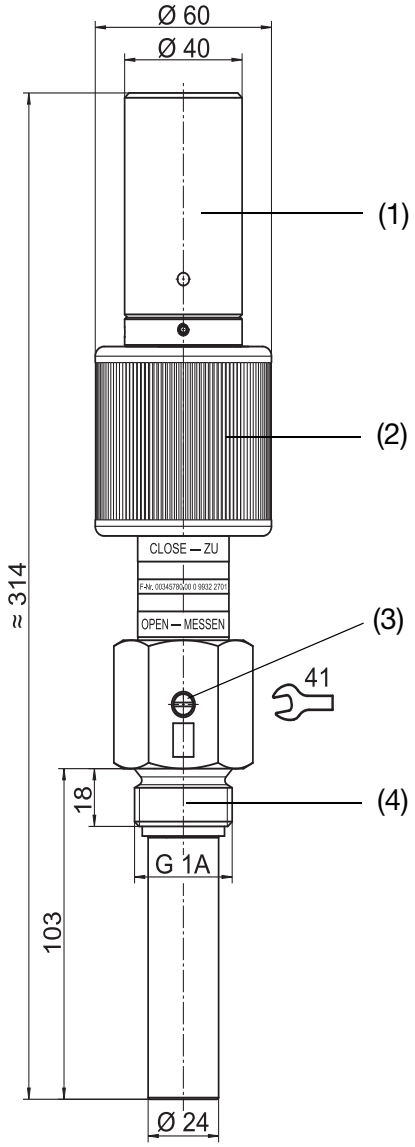

Position: "Service, install/remove sensor"

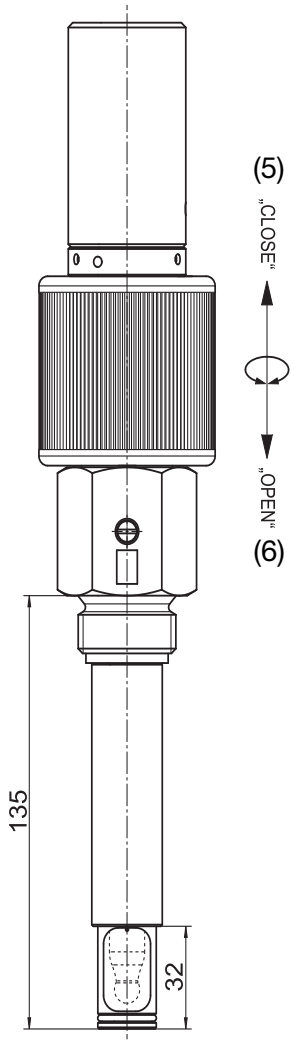

Position "Measurement"

(1) Protective cap, PP
(2) Union nut, PP
(3) Grounding screw
(4) Connection G 1 A, stainless steel
(5) Closed
(6) Open

Type 202822/106-135-87

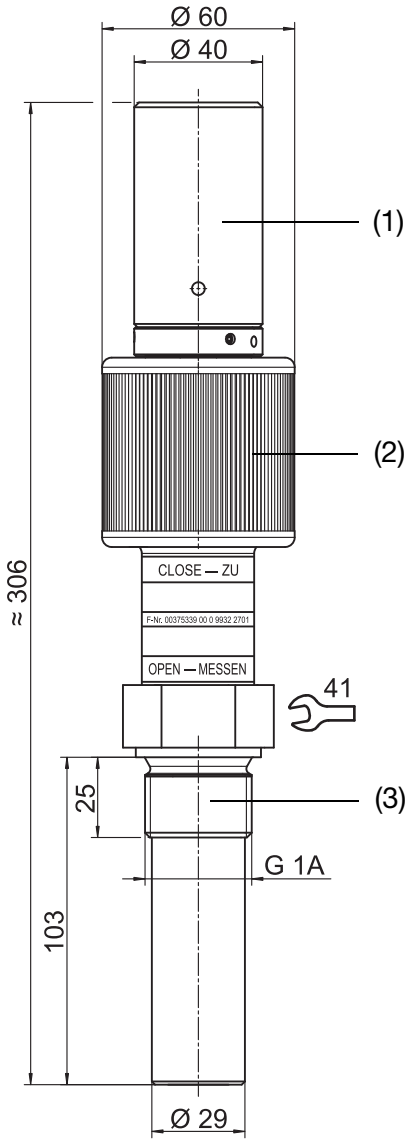

Position: "Service, install/remove sensor"

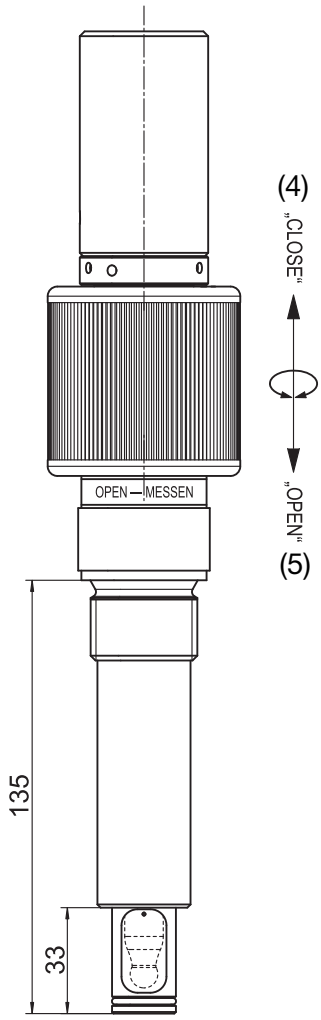

Position "Measurement"

(1) Protective cap, PP
(2) Union nut, PP
(3) Connection G 1 A, PP
(4) Closed
(5) Open

4 Appendix

Type 202822/613-48-26

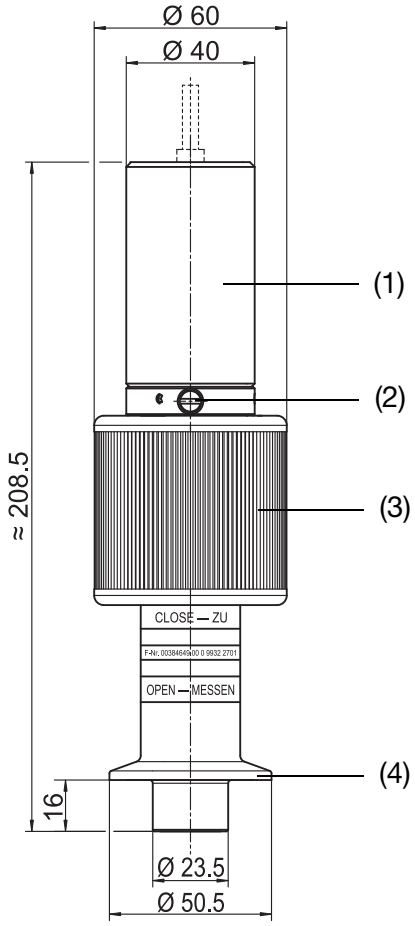

Position: "Service, install/remove sensor"

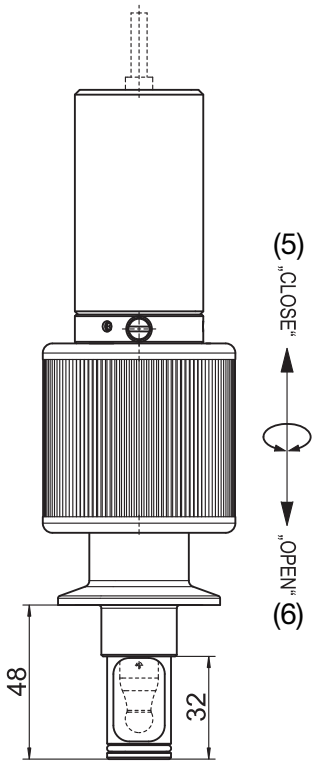

Position "Measurement"

(1) Protective cap, PP
(2) Grounding screw
(3) Union nut, PP
(4) Connection Clamp DN25, stainless steel
(5) Closed
(6) Open

4.3 Maintenance and cleaning



Caution

All settings and maintenance operations on the quick-change fitting must only be made in a **depressurized** condition!

Depending on the application (temperature/pressure requirements, contamination and frequency of operation), a maintenance interval has to be scheduled. This involves servicing the moving parts of the quick-change fitting as described below.

Spare parts: replacement O-rings are included in delivery
Suitable are: FPM O-rings 25 x 2 and 16 x 2

Dismantling the quick-change fitting

Diagrams see following page.

- Unscrew protective cap (1).
- Release grub screw (2) using a 2 mm hexagon socket wrench (included in delivery), remove ring (3).
- Unscrew union nut (4) by hand.
- Release grub screw (6) in setting ring (7) using a 2 mm hexagon socket wrench.
- Remove locking pin (8).
- Pull out electrode pocket (5) from screw-in pocket (10).
- Clean electrode pocket (5) and screw-in pocket (10).
- Check O-rings (9), replace, if necessary (accessory).
- Grease O-rings (9) before fitting.
- Assemble quick-change fitting in reverse order.



Caution

- Fit locking pin (8)!
- Screw in grub screw (2 and 6) tightly!



Note

Suitable greases: vaseline, acid-free greases, silicone oil etc.
Check compatibility with the solution!

4 Appendix

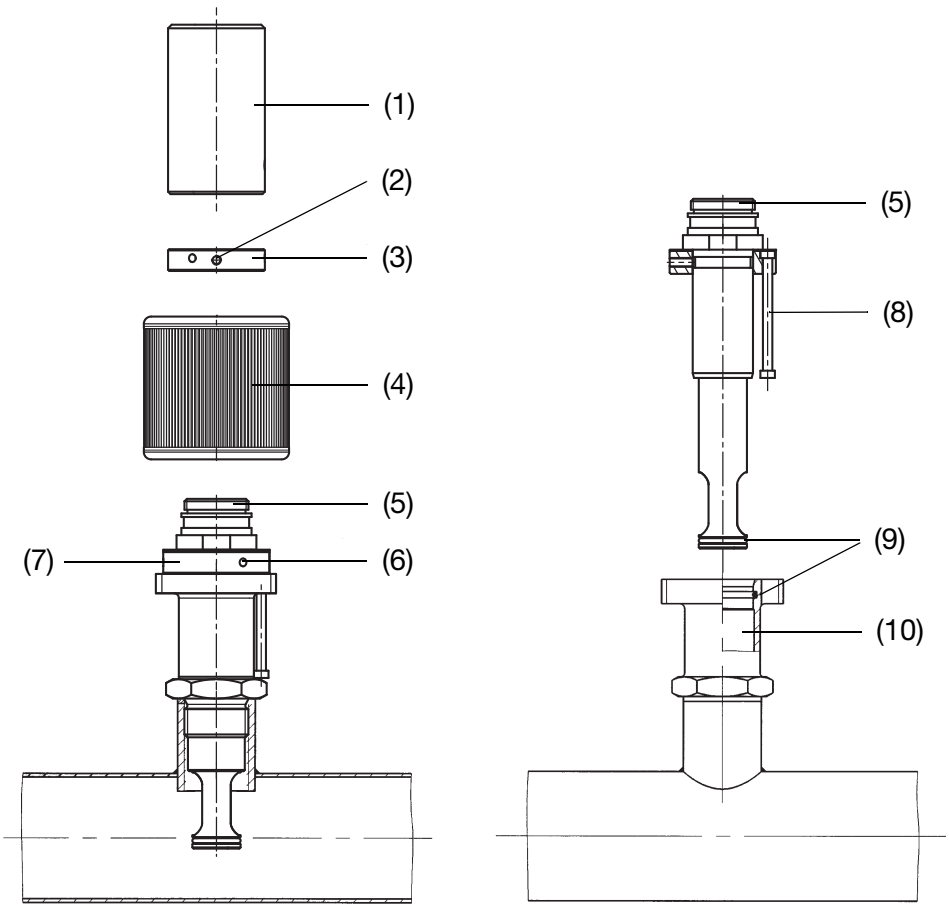

(1) Protective cap
(2) Grub screw
(3) Ring
(4) Union nut
(5) Electrode pocket
(6) Grub screw
(7) Setting ring
(8) Locking pin
(9) O-ring
(10) Screw-in pocket

5 China RohS

						
产品组别 Product group: 202822	产品中有害物质的名称及含量 China EEP Hazardous Substances Information					
部件名称 Component Name						
	铅 （Pb）	汞 （Hg）	镉 （Cd）	六价铬 （Cr(VI)）	多溴联苯 （PBB）	多溴二苯醚 （PBDE）
外壳 Housing (Gehäuse)	○	○	○	○	○	○
过程连接 Process connection (Prozessanschluss)	○	○	○	○	○	○
螺母 Nuts (Mutter)	X	○	○	○	○	○
螺栓 Screw (Schraube)	X	○	○	○	○	○

本表格依据SJ/T 11364的规定编制。
This table is prepared in accordance with the provisions SJ/T 11364.
○：表示该有害物质在该部件所有均质材料中的含量均在GB/T 26572规定的限量要求以下。
Indicate the hazardous substances in all homogeneous materials' for the part is below the limit of the GB/T 26572.

×：表示该有害物质至少在该部件的某一均质材料中的含量超出GB/T 26572规定的限量要求。
Indicate the hazardous substances in at least one homogeneous materials' of the part is exceeded the limit of the GB/T 26572.

JUMO GmbH & Co. KG
Street address:
Moritz-Juchheim-Straße 1
36039 Fulda, Germany
Delivery address:
Mackenrodtstraße 14
36039 Fulda, Germany
Postal address:
36035 Fulda, Germany
Phone: +49 661 6003-0
Fax: +49 661 6003-607
Email: mail@jumo.net
Internet: www.jumo.net

JUMO Instrument Co. Ltd.
JUMO House
Temple Bank, Riverway
Harlow, Essex, CM20 2DY, UK
Phone: +44 1279 63 55 33
Fax: +44 1279 62 50 29
Email: sales@jumo.co.uk
Internet: www.jumo.co.uk

JUMO Process Control, Inc.
6733 Myers Road
East Syracuse, NY 13057, USA

Phone: +1 315 437 5866
Fax: +1 315 437 5860
Email: info.us@jumo.net
Internet: www.jumousa.com

