JUMO digiLine CR

Intelligent electronic components with IO-Link interface for conductive conductivity sensors



Operating Manual

20276340T90Z001K000

V3.00/EN/00691450/2024-02-20

Table of contents

1 Safety information 7

1.1 Safety signs 7
1.1.1 Warning symbols 7
1.1.2 Note symbols 7
1.2 Intended use 8
1.3 Qualification of personnel 8

2 Acceptance of goods, storage, and transport 9

2.1 Checking the delivery 9
2.2 Important information about storage and transport 9
2.3 Returning goods 9
2.3.1 Accompanying letter for repair 9
2.3.2 Decontamination Statement 9
2.3.3 Protection against electrostatic discharge 10
2.4 Disposal 10

3 Device Description 11

3.1 Introduction 11
3.2 Block diagram 11
3.3 Device setup 12
3.4 Description 15

4 Identifying the device version 17

4.1 Order details 17
4.1.1 Head transmitter (202763...) 17
4.1.2 Devices for separate sensors (202762) 29
4.2 Accessories 30

5 Mounting 31

5.1 Mounting site and climatic conditions 31
5.2 Dimensions of device versions with separate sensor 31
5.2.1 Device versions with plastic housing 31
5.2.2 Device versions with stainless steel case 33
5.3 Dimensions of head transmitter 35
5.4 Mounting devices with a separate sensor 42
5.4.1 JUMO digiLine CR with plastic housing 42
5.4.2 JUMO digiLine CR with stainless steel case 44
5.5 Mounting of head transmitters 45

Table of contents

6 Electrical connection 47

6.1 Installation notes 47
6.2 Connection diagram 47
6.2.1 Functional ground connection for device versions with stainless steel case 50
6.2.2 Galvanic isolation 51
6.2.3 Connection examples 52

7 Operation 53

7.1 General Information 53
7.2 Device menu 54
7.2.1 Log-on/Log-out 55
7.2.2 User level 55
7.2.3 Calibration 56
7.2.4 Device information 56
7.2.5 Service 56

8 Startup 57

8.1 Functional test 58

9 Calibration 59

9.1 General information 59
9.2 Calibration methods for CR conductivity sensors (conductive) 59
9.3 Calibration default settings 61
9.4 Calibration of the JUMO digiLine CR with IO-Link interface 61
9.5 Calibration via local operation in device versions with a display 61
9.6 Calibration values 64
9.7 Calibration logbook 65
9.8 Evaluation criteria for calibration 65

10 Troubleshooting in the event of faults 67

11 Data overview 69

11.1 General Information 69
11.2 Sensor data 69
11.3 Process values 70
11.4 Operating data 71
11.5 Calibration data 72

Table of contents

12 IO-Link data 73

12.1 Process data 73
12.2 Configuration data 75
12.3 Service data 85
12.4 Fault signaling 86

13 Configuration 89

13.1 General Information 89
13.2 Important information 89
13.3 Input 89
13.3.1 CR input (resistivity conductivity) 89
13.3.2 Measuring ranges 1 to 4 for the CR input 90
13.3.3 Temperature input 91
13.4 IO-Link interface 92
13.4.1 SIO mode (switching outputs) 92
13.5 CIP/SIP 92
13.6 Calibration timer 94
13.7 Sensor stress 94
13.8 Display 94

14 Operation, maintenance and care 97

14.1 Cleaning 97
14.2 Sensor replacement on device versions with a separate sensor 97

15 Technical data 99

15.1 IO-Link interface 99
15.2 Analog inputs (sensor connection side) 99
15.3 Electrical data 100
15.4 Case 100
15.5 Environmental influences 101
15.5.1 Device version as head transmitter 101
15.5.2 Device version with separate sensor 101
15.6 Approvals 102
15.6.1 Head transmitter (202763...) 102
15.6.2 Devices for separate sensors (202762) 102
15.7 Sensor properties in head transmitters 103

16 Annex 105

16.1 China RoHS 105

Table of contents

1.1 Safety signs

1.1.1 Warning symbols



DANGER!

This symbol indicates that **personal injury from electrocution** may occur if the appropriate precautionary measures are not taken.



WARNING!

This symbol in connection with the signal word indicates that **personal injury** may occur if the respective precautionary measures are not carried out.



CAUTION!

This symbol in connection with the signal word indicates that **material damage or data loss** will occur if the respective precautionary measures are not taken.



CAUTION!

This symbol indicates that **components could be destroyed** by electrostatic discharge (ESD = Electro Static Discharge) if the respective cautionary measures are not taken.

Only use the ESD packages intended for this purpose to return device inserts, assembly groups, or assembly components.



READ THE DOCUMENTATION!

This symbol, which is attached to the device, indicates that the associated **documentation for the device** must be **observed**. This is necessary to identify the nature of the potential hazard, and to take measures to prevent it.

1.1.2 Note symbols



NOTE!

This symbol refers to **important information** about the product, its handling, or additional benefits.



REFERENCE!

This symbol refers to **additional information** in other sections, chapters, or other manuals.



FURTHER INFORMATION!

This symbol is used in tables and indicates that **further information** is provided after the table.



DISPOSAL!

At the end of its service life, the device and any batteries present do not belong in the trash! Please ensure that they are **disposed of** properly and in an **environmentally friendly** manner.

1 Safety information

1.2 Intended use

The device described in these instructions is used to measure analytical process variables in liquids in an industrial environment as specified in the technical data. Other uses beyond those defined are not viewed as intended uses.

The device is built according to the relevant standards and directives as well as to the applicable safety regulations. Nevertheless, improper use, incorrect installation or configuration can result is erroneous measurements. Depending on the plant, this may cause unwanted control actions (e. g. overmetering) in the plant. Personal injury and property damage must be prevent through appropriate safety measures and safety devices provided by the customer.

To avoid danger, only use the device:

- for the intended use
- when in good order and condition
- In compliance with these instructions



WARNING!

Error during installation, mounting, or configuration of JUMO sensors with digiLine electronics can disrupt proper execution of the downstream process or cause damage.

▶ For this reason, it is always necessary to provide safety devices that are independent of the device and to allow settings to be made only by technical personnel.



CAUTION!

JUMO sensors with digiLine electronics must be calibrated correctly to prevent measurement errors.

1.3 Qualification of personnel

This manual contains the necessary information for the intended use of the device described therein.

It is intended for technically qualified personnel who have received special training or have the appropriate knowledge in the field of automation technology (measuring and control technology).

Understanding and technically correct observance of the safety instructions and warnings contained in this manual are prerequisites for safe mounting, installation, and startup as well as safety during operation of the described device. Only qualified individuals have the required technical knowledge to interpret and put into practice the safety instructions and warnings used in this manual in any given situation.

2 Acceptance of goods, storage, and transport

2.1 Checking the delivery

- On delivery, ensure that the packaging and its contents are undamaged.
- Check the delivery for completeness against the packing slip and order confirmation.

Proceed as follows if external transport damage is visible:

- Do not accept the delivery or only conditionally.
- Note the extent of damage on the transport documents or on the delivery note of the freight forwarder.
- File a complaint.

2.2 Important information about storage and transport

- Store the device in a dry, clean environment. Observe the admissible environmental influences (see chapter 15 "Technical data", Page 99).
- Protect the device from shock during transport. The original packaging offers optimal protection.

2.3 Returning goods

If repairs are needed, return the device in clean condition and in its entirety.

Use the original packaging when returning the device.

2.3.1 Accompanying letter for repair

Please include the completed accompanying letter for repair when returning goods. Do not forget to state the following:

- Description of the application
- Description of the error that has occurred

The letter of transmittal accompanying product returns can be downloaded on the Internet at www.jumo.de under Services > Repair service.

2.3.2 Decontamination Statement

As a certified company and in compliance with legal requirements, JUMO is required to handle all incoming products that come into contact with liquids in compliance with statutory regulations.

Before returning a device for repair or calibration:

- Remove all adhering residues of the substance measured.
  Pay special attention to grooves for seals and cracks where residues of the material being measured may adhere. This is especially important when the material being measured is a hazardous substance.

A returned device can only be accepted if the information regarding protection against contamination has been completed correctly on the letter of transmittal accompanying the product returned. If the device has come into contact with hazardous substances, state this and attach the appropriate safety data sheets to the letter of transmittal.

2.3.3 Protection against electrostatic discharge

(ESD = **e**lectro **s**tatic **d**ischarge)

To prevent damage from ESD, electronic assemblies, or components with a high internal resistance must be handled, packaged, and stored in an environment that protects against ESD. Measures that protect against electrostatic discharge and electric fields are described in DIN EN 61 340-5-1 and DIN EN 61 340-5-2 "Electrostatics – Part 5-2 – Protection of electronic devices from electrostatic phenomena".

If you are returning electronic assemblies or components for repair:

- Pack sensitive components only in an environment providing protection against ESD. Workspaces such as this divert electrostatic charges to ground in a controlled manner and prevent static charges due to friction.
- Use only packaging intended specifically for ESD-sensitive assemblies/components. These must consist of conductive plastics.

Keep in mind that the manufacturer assumes no liability for damage caused by ESD.



CAUTION!

Electrostatic charges occur in non-ESD-protected environments.

Electrostatic discharges can damage modules or components.

▶ For transport purposes, use only the ESD packaging provided.

2.4 Disposal



- Do not dispose of the device or replaced parts in the trash after use.
- Delete programs and data stored on the device.
- Remove batteries, if any, if this can be done without damaging the device.
- Dispose of the device and the packaging material in a responsible and environmentally friendly manner.
- Observe the country-specific laws and regulations for waste treatment and disposal.

In accordance with Directive 2012/19/EU on Waste from Electrical and Electronic Equipment, manufacturers are obliged to offer the option of returning waste equipment. Request the return from the manufacturer.

3.1 Introduction

General
The JUMO digiLine CR in the version with the IO-Link interface has a 4-pole M12 plug connector for connecting to an IO-Link master. The model versions with an IO-Link interface are used wherever connection of the JUMO digiLine CR to an automation device or the like on the basis of the IO-Link standard is desired.

Installation and connection
The JUMO digiLine CR with IO-Link interface is available in two device versions in terms of design type:

- **Device version as head transmitter:** JUMO digiLine electronics and sensor form an integrated module. The module is installed in a suitable fitting.
- **Device version with separate sensor:** JUMO digiLine electronics and sensor are separate modules and are connected to one another by a cable. The sensor is installed in a suitable fitting. The JUMO digiLine electronics are mounted in the vicinity of the sensor using the supplied wall/pipe/DIN rail holder.

If it becomes necessary to replace the sensor due to a defect or wear, in the device versions with a separate sensor, the JUMO digiLine electronics can be disconnected from the sensor and the intact components reused. In the device version as head transmitter, disconnecting the sensor from the JUMO digiLine electronics is not possible. The connection with the bus is established easily and quickly by attaching (plug in and screw on) a preassembled bus cable (available from JUMO).

Configuration, parameterization and calibration
The JUMO digiLine CR with IO-Link interface is normally configured and parameterized using the engineering system controls of your automation system. Calibration can be controlled from the automation system via the interface. To do this, you must incorporate. the calibration routines described in this manual into your system software. Configuration, parameterization, and calibration can, however, also be carried out conveniently in the laboratory on a PC using the JUMO DSM-Software (**D**igital **S**ensor **M**anagement software). It is only necessary to connect the device to the PC via its USB interface.

3.2 Block diagram

JUMO digiLine CR with IO-Link interface

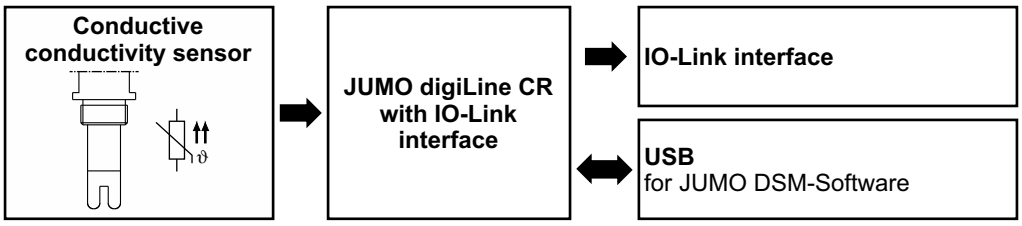

3 Device Description

3.3 Device setup

JUMO digiLine electronic components with plastic housing for separate CR sensors

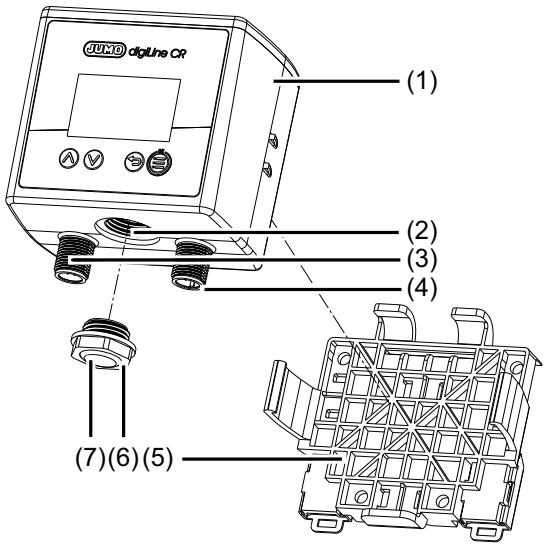

1) JUMO digiLine electronics for CR sensors
2) Housing opening for USB interface and status LED
3) M12 plug connector, 8-pole for sensor connection
4) M12 plug connector for interface connection
5) Holder for wall, pipe and DIN rail mounting
6) Transparent threaded coupling for housing opening
7) Venting element (embedded in threaded coupling)

JUMO digiLine CR head transmitter with plastic housing

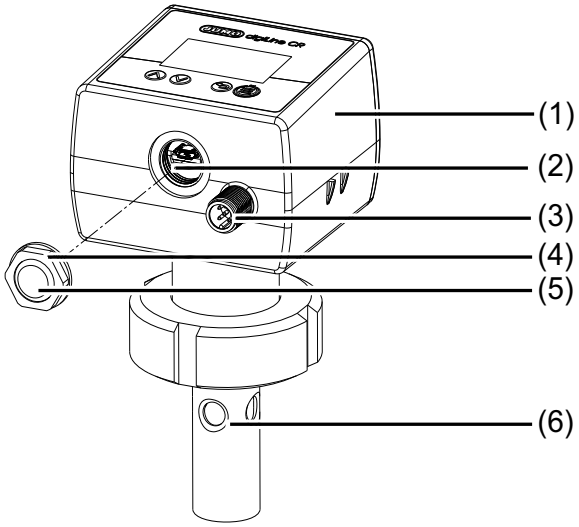

1) JUMO digiLine electronics for CR sensors
2) Housing opening for USB interface and status LED
3) M12 plug connector for interface connection
4) Transparent threaded coupling for housing opening
5) Venting element (embedded in threaded coupling)
6) CR sensor

JUMO digiLine electronic components with stainless steel case for separate CR sensors

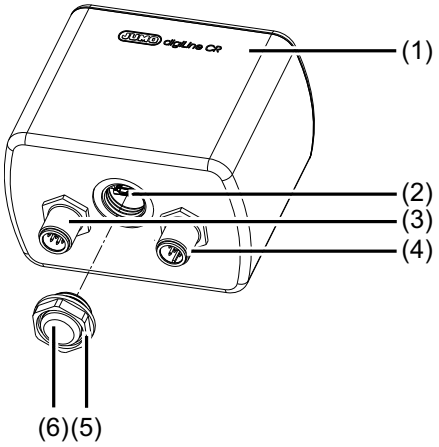

1) JUMO digiLine electronics for CR sensors
2) Housing opening for USB interface and status LED
3) M12 plug connector, 8-pole for sensor connection
4) M12 plug connector for interface connection
5) Transparent threaded coupling for housing opening
6) Venting element (embedded in threaded coupling)

JUMO digiLine CR head transmitter with stainless steel case

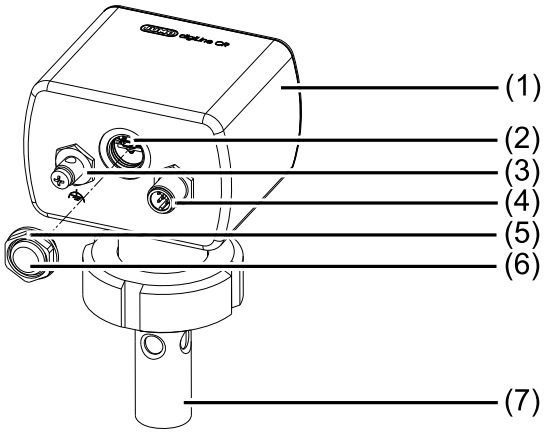

1) JUMO digiLine electronics for CR sensors
2) Housing opening for USB interface and status LED
3) Functional earth terminal
4) M12 plug connector for interface connection
5) Transparent threaded coupling for housing opening
6) Venting element (embedded in threaded coupling)
7) CR sensor

3 Device Description

Display and control elements of the JUMO digiLine CR

Device version with display and membrane keyboard in plastic housing

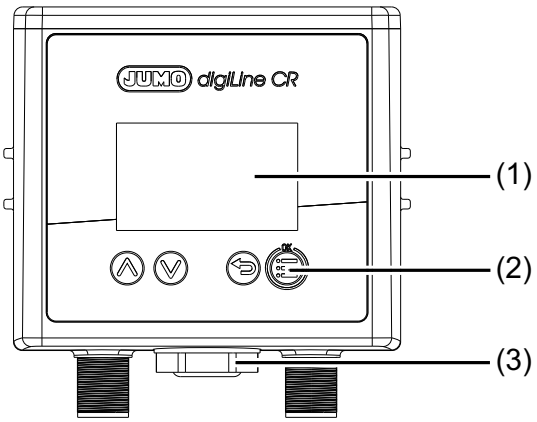

1) Display
2) Operating keys
3) Status display via transparent housing threaded coupling with internal status LED

The status is always indicated via the display (1) and – depending on the the date of manufacturing of the device – additionally via the internal status LED (3).

Device version without display or membrane keyboard in plastic housing

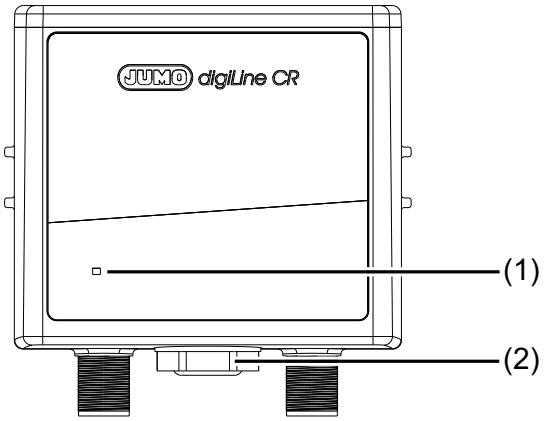

1) Status indication via status LED
2) Status display via transparent housing threaded coupling with internal status LED

Depending on the date of manufacture of the device, the status is displayed either via the status LED (1) on the front or the internal status LED (2).

Device version without display or membrane keyboard in stainless steel case

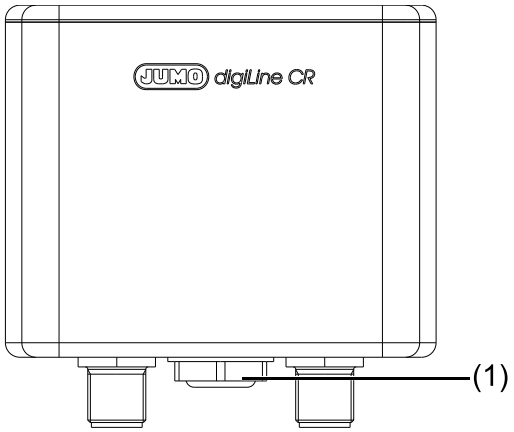

1) Status display via transparent housing threaded coupling with internal status LED

3.4 Description

Device version IO-Link interface

The device version with IO-Link interface permits integration into systems which use the IO-Link interface popular in automation technology. The IO Device Description (IODD) required to engineer the customer's automation devices is provided at www.jumo.net and https://ioddfinder.io-link.com. Further detailed information can be found online at www.io-link.com or in the relevant technical literature.

Temperature compensation

Temperature compensation is handled by the digiLine electronics. When JUMO sensors with an integrated temperature probe are used, the JUMO digiLine electronics can obtain the temperature compensation directly from the sensor. Alternatively, the compensation temperature can be transferred from the digiLine master or a fixed temperature can be specified in the configuration of the JUMO digiLine electronics.

Calibration

Calibration can be performed in the field, if available, via the operating panel of the JUMO digiLine electronic components. It is also possible to calibrate at a lab workstation using the JUMO DSM software. The calibration data are saved in the JUMO digiLine electronics of the sensor. The sensor calibration can therefore be performed ahead of commissioning, so that the sensor with its JUMO digiLine electronics can then simply be mounted on the system. This reduces the plant downtime to a minimum when it becomes necessary to replace the sensor.

Calibration timer

The JUMO digiLine electronics has a calibration timer which, after a set calibration interval has lapsed, is able to trigger a reminder for the sensor calibration due for the relative cell constant on the master. The calibration interval setting can be changed via the IO-Link interface or by means of the JUMO DSM software. After each sensor calibration, the calibration interval is restarted.

The calibration timer is not active for calibrations of a temperature coefficient and temperature coefficient curve.

Calibration logbook

The JUMO digiLine electronics contain a calibration logbook in which the last 10 calibration operations are saved with the date, time, and calibration values. This logbook provides an overview of the calibration history of the sensor. The calibration logbook can be read out using the JUMO DSM software on the PC. There is no limit to the number of saved calibration logbook entries for JUMO digiLine electronics in the JUMO DSM software.

Sensor information

Numerous data such as type information, operating data, information on measuring point identification etc. are stored in the JUMO digiLine electronics. This information allows clear identification and optimal management of each sensor. All of this data can be viewed using the JUMO DSM software.

Limit value monitoring function

On device versions with binary outputs or an IO-Link interface, 2 limit value monitoring functions with 4 selectable basic mathematical switching functions each (Min. alarm, Max. alarm, Alarm window and Alarm window inverted) are available The limit value can be permanently configured. In addition, it is also possible to set limit value alarms acc. to USP <645> or the European Pharmacopoeia (Ph. Eur.) for purified water.

If necessary, suppression of limit value alarms that occur when switching the device on and when changing the measuring range can be configured.

Limit value monitoring can be used to monitor the analog values of the temperature and conductivity measurement inputs. The limit value alarm signals can be configured as the signal source for the binary inputs and, on device versions with binary outputs, also for the alarm buzzer of the device.

3 Device Description

Sensor monitoring

To monitor the stress on the sensor from sensor cleaning, counters are implemented for CIP and SIP cycles. CIP and SIP cycles are recognized automatically on the basis of the criteria specified in the configuration for sensor monitoring. The counters for the CIP and SIP cycles each retain the number of cleaning processes performed. Upon reaching a configured counter reading, an alarm is signaled on the local display (if present) of the JUMO digiLine CR. The counter readings can be retrieved by IO-Link masters in order to assess the wear status of the sensor. After a sensor has been replaced, the counters are reset with the JUMO DSM software.

Sensor stress

To assess the stress on the sensor from the thermal, the current "sensor stress" is calculated on the basis of the measurement data provided by the sensor. In the JUMO digiLine electronic components, a sensor stress alarm signal can be configured. If a critical sensor stress level is reached, this signals a sensor stress alarm on the master device and, where available, on the display of the JUMO digiLine electronic components.

JUMO Digital Sensor Management Software for the PC

The JUMO DSM software (DSM stands for **D**igital **S**ensor **M**anagement) can be used to manage, calibrate, and test JUMO digiLine electronics on the PC. In addition, it serves as a configuration tool for the JUMO digiLine electronics. The connection to the PC is made via the USB interface. The JUMO DSM software adds data from the memory of JUMO digiLine electronics to its sensor database. The sensor database holds calibration logbook entries, histories about replaced sensors and configuration changes to the JUMO digiLine electronics. If the JUMO digiLine electronics are to be connected to a new sensor (device versions with a separate sensor only), data for the new sensor can be reset via the JUMO DSM software and the information from the old sensor archived on the PC.

4.1 Order details

4.1.1 Head transmitter (202763...)

	(1)	**Basic type**
202763		JUMO digiLine CR HT10 (head transmitter with sensor type JUMO BlackLine CR-EC)
	(2)	**Basic type extension**
10		Digital operation, plastic housing (JUMO digiLine)
15		Digital operation, metal case (JUMO digiLine)
20		Analog operation, plastic housing (with analog outputs)
25		Analog operation, metal case (with analog outputs)
40		Digital operation, plastic housing (IO-Link)
45		Digital operation, metal case (IO-Link)
50		Analog operation, plastic housing (with solid-state relays)
55		Analog operation, metal case (with solid state relay)
	(3)	**Display**
00		without display
10		With display
	(4)	**Version**
8		Standard with default settings
9		Customer-specific configuration (specification in plain text)
	(5)	**Language**
01		German
02		English
	(6)	**Cell constant**
0001		0.01 1/cm
0010		0.1 1/cm
0100		1.0 1/cm
	(7)	**Measuring insert**
1003		1× Pt100 in two-wire circuit
1005		1× Pt1000 in two-wire circuit
	(8)	**Process connection**
104		Screw connection G 1/2
144		Screw connection 1/2-14 NPT
	(9)	**Process connection material**
85		Plastic
	(10)	**Electrode material**
26		CrNi 1.4571
60		Ti (titanium)

4 Identifying the device version

	(1)		(2)		(3)		(4)		(5)		(6)	
Order code		/		-		-		-		-		-
Order example	202763	/	10	-	10	-	8	-	01	-	0010	-

(7)		(8)		(9)		(10)
	-		-		-	
1005	-	104	-	85	-	26

	(1)	**Basic type**
202764		JUMO digiLine CR HT20 (head transmitter with sensor type JUMO ecoLine CR-PVC)
	(2)	**Basic type extension**
10		Digital operation, plastic housing (JUMO digiLine)
15		Digital operation, metal case (JUMO digiLine)
20		Analog operation, plastic housing (with analog outputs)
25		Analog operation, metal case (with analog outputs)
40		Digital operation, plastic housing (IO-Link)
45		Digital operation, metal case (IO-Link)
50		Analog operation, plastic housing (with solid-state relays)
55		Analog operation, metal case (with solid state relay)
	(3)	**Display**
00		without display
10		With display
	(4)	**Version**
8		Standard with default settings
9		Customer-specific configuration (specification in plain text)
	(5)	**Language**
01		German
02		English
	(6)	**Cell constant**
0010		0.1 1/cm
0100		1.0 1/cm
	(7)	**Measuring insert**
1003		1× Pt100 in two-wire circuit
1005		1× Pt1000 in two-wire circuit
	(8)	**Process connection**
105		Screw connection G 3/4
687		Stepped collar PVC Ø 32 / DN 25
	(9)	**Process connection material**
86		Plastic (PVC)
	(10)	**Electrode material**
26		Stainless steel 1.4571
84		Graphite

	(1)		(2)		(3)		(4)		(5)		(6)		(7)		(8)		(9)		(10)
Order code		/		-		-		-		-		-		-		-		-	
Order example	202764	/	10	-	10	-	8	-	01	-	0010	-	1003	-	687	-	86	-	84

4 Identifying the device version

	(1)	**Basic type**
202765		JUMO digiLine CR HT30 (head transmitter with sensor type JUMO tecLine CR-VA)
	(2)	**Basic type extension**
10		Digital operation, plastic housing (JUMO digiLine)
15		Digital operation, metal case (JUMO digiLine)
20		Analog operation, plastic housing (with analog outputs)
25		Analog operation, metal case (with analog outputs)
40		Digital operation, plastic housing (IO-Link)
45		Digital operation, metal case (IO-Link)
50		Analog operation, plastic housing (with solid-state relays)
55		Analog operation, metal case (with solid state relay)
	(3)	**Display**
00		without display
10		With display
	(4)	**Version**
8		Standard with default settings
9		Customer-specific configuration (specification in plain text)
	(5)	**Language**
01		German
02		English
03		French
	(6)	**Cell constant**
0001		0.01 1/cm
0010		0.1 1/cm
	(7)	**Measuring insert**
1003		1× Pt100 in two-wire circuit
1005		1× Pt1000 in two-wire circuit
	(8)	**Process connection**
104		Screw connection G 1/2[ac]
105		Screw connection G 3/4[a]
106		Fitting G 1[b]
144		Screw connection 1/2-14 NPT[a]
145		Screw connection 3/4-14 NPT[b]
604		Taper socket with union nut DN 25 DIN 11851 (dairy pipe fitting)[c]
613		Clamping socket (clamp) DN 25/32/40 DIN32676[d]
	(9)	**Process connection material**
26		CrNi 1.4571
31		CrNi 1.4435
88		PVDF
	(10)	**Electrode material**
26		CrNi 1.4571
31		CrNi 1.4435
60		Ti (titanium)[a]

(11)	Extra codes
000	without extra codes
374	Inspection certificate 3.1 Material DIN EN 10204
864	Inspection certificate 3.1 Surface roughness (Ra)
955	ASTM test report
956	FDA certificate

[a] Only in combination with material process connection PVDF.

[b] At preparation stage

[c] Only in combination with material process connection PVDF and CrNi 1.4571.

[d] Only in combination with material process connection CrNi 1.4435 and CrNi 1.4571.

	(1)		(2)		(3)		(4)		(5)		(6)		(7)		(8)		(9)		(10)		(11)	
Order code		/		-		-		-		-		-		-		-		/		,
Order example	202765	/	10	-	10	-	8	-	01	-	0010	-	1003	-	613	-	31	-	31	/	000	,
													...[a]									
													000									

[a] List extra codes in sequence, separated by commas

4 Identifying the device version

	(1)	**Basic type**
202766		JUMO digiLine CR HT40 (head transmitter with sensor type JUMO tecLine CR-SL)
	(2)	**Basic type extension**
10		Digital operation, plastic housing (JUMO digiLine)
15		Digital operation, metal case (JUMO digiLine)
20		Analog operation, plastic housing (with analog outputs)
25		Analog operation, metal case (with analog outputs)
40		Digital operation, plastic housing (IO-Link)
45		Digital operation, metal case (IO-Link)
50		Analog operation, plastic housing (with solid-state relays)
55		Analog operation, metal case (with solid state relay)
	(3)	**Display**
00		without display
10		With display
	(4)	**Version**
8		Standard with default settings
9		Customer-specific configuration (specification in plain text)
	(5)	**Language**
01		German
02		English
	(6)	**Cell constant**
0001		0.01 1/cm
0010		0.1 1/cm
	(7)	**Measuring insert**
1003		1× Pt100 in two-wire circuit
1005		1× Pt1000 in two-wire circuit
	(8)	**Process connection**
104		Screw connection G 1/2[a]
613		Clamping socket (clamp) DN 25/32/40 DIN32676[a]
	(9)	**Process connection material**
31		CrNi 1.4435
	(10)	**Electrode material**
31		CrNi 1.4435
	(11)	**Extra codes**
000		without extra codes
374		Inspection certificate 3.1 Material DIN EN 10204
864		Inspection certificate 3.1 Surface roughness (Ra)
955		ASTM test report
956		FDA certificate

[a] Only in combination with material process connection CrNi 1.4435.

	(1)		(2)		(3)		(4)		(5)		(6)		(7)		(8)		(9)		(10)		(11)	
Order code		/		-		-		-		-		-		-		-		/		,	...[a]
Order example	202766	/	10	-	10	-	8	-	01	-	0010	-	1003	-	613	-	31	-	31	/	000	,	

[a] List extra codes in sequence, separated by commas

4 Identifying the device version

	(1)	**Basic type**
202767		JUMO digiLine CR HT50 (head transmitter with sensor type JUMO tecLine CR-PK)
	(2)	**Basic type extension**
10		Digital operation, plastic housing (JUMO digiLine)
15		Digital operation, metal case (JUMO digiLine)
20		Analog operation, plastic housing (with analog outputs)
25		Analog operation, metal case (with analog outputs)
40		Digital operation, plastic housing (IO-Link)
45		Digital operation, metal case (IO-Link)
50		Analog operation, plastic housing (with solid-state relays)
55		Analog operation, metal case (with solid state relay)
	(3)	**Display**
00		without display
10		With display
	(4)	**Version**
8		Standard with default settings
9		Customer-specific configuration (specification in plain text)
	(5)	**Language**
01		German
02		English
	(6)	**Cell constant**
0001		0.01 1/cm
0010		0.1 1/cm
	(7)	**Measuring insert**
1003		1× Pt100 in two-wire circuit
1005		1× Pt1000 in two-wire circuit
	(8)	**Process connection**
997		JUMO PEKA adapter system
	(9)	**Insertion length**
40.0		40 mm
70.0		70 mm
	(10)	**Process connection material**
31		CrNi 1.4435
	(11)	**Electrode material**
31		CrNi 1.4435
	(12)	**Extra codes**
000		without extra codes
374		Inspection certificate 3.1 Material DIN EN 10204
864		Inspection certificate 3.1 Surface roughness (Ra)
955		ASTM approval
956		FDA certificate

	(1)		(2)		(3)		(4)		(5)		(6)	
Order code		/		-		-		-		-		-
Order example	202767	/	10	-	10	-	8	-	01	-	0010	-
			(7)		(8)		(9)		(10)		(11)	
				-		-		-		-		-
			1005	-	997	-	40.0	-	31	-	31	-
			(12)									
				,	...[a]							
			000	,								

[a] List extra codes in sequence, separated by commas

4 Identifying the device version

	(1)	**Basic type**
202768		JUMO digiLine CR HT60 (head transmitter with sensor type JUMO tecLine CR-GT)
	(2)	**Basic type extension**
10		Digital operation, plastic housing (JUMO digiLine)
15		Digital operation, metal case (JUMO digiLine)
20		Analog operation, plastic housing (with analog outputs)
25		Analog operation, metal case (with analog outputs)
40		Digital operation, plastic housing (IO-Link)
45		Digital operation, metal case (IO-Link)
50		Analog operation, plastic housing (with solid-state relays)
55		Analog operation, metal case (with solid state relay)
	(3)	**Display**
00		without display
10		With display
	(4)	**Version**
8		Standard with default settings
9		Customer-specific configuration (specification in plain text)
	(5)	**Language**
01		German
02		English
	(6)	**Cell constant**
0100		1.0 1/cm
	(7)	**Measuring insert**
1003		1× Pt100 in two-wire circuit
1005		1× Pt1000 in two-wire circuit
	(8)	**Process connection**
105		Screw connection G 3/4
106		Fitting G 1
145		Screw connection 3/4-14 NPT[a]
604		Taper socket with union nut DN 25 DIN 11851 (dairy pipe fitting)
	(9)	**Process connection material**
88		PVDF
	(10)	**Electrode material**
84		Graphite

[a] At preparation stage

	(1)		**(2)**		**(3)**		**(4)**		**(5)**		**(6)**	
Order code		/		-		-		-		-		-
Order example	202768	/	10	-	10	-	8	-	01	-	0010	-

	(7)		**(8)**		**(9)**		**(10)**
		-		-		-	
	1003	-	105	-	88	-	84

	(1)	**Basic type**
202769		JUMO digiLine CR HT70 (head transmitter with sensor type JUMO tecLine CR-4P)
	(2)	**Basic type extension**
10		Digital operation, plastic housing (JUMO digiLine)
15		Digital operation, metal case (JUMO digiLine)
20		Analog operation, plastic housing (with analog outputs)
25		Analog operation, metal case (with analog outputs)
40		Digital operation, plastic housing (IO-Link)
45		Digital operation, metal case (IO-Link)
50		Analog operation, plastic housing (with solid-state relays)
55		Analog operation, metal case (with solid state relay)
	(3)	**Display**
00		without display
10		With display
	(4)	**Version**
8		Standard with default settings
9		Customer-specific configuration (specification in plain text)
	(5)	**Language**
01		German
02		English
	(6)	**Cell constant**
0035		0.35 1/cm
	(7)	**Measuring insert**
1005		1× Pt1000 in two-wire circuit
	(8)	**Process connection**
997		JUMO PEKA adapter system
	(9)	**Insertion length**
18.0		18 mm
38.0		38 mm
48.0		48 mm
	(10)	**Process connection material**
79		PEEK
	(11)	**Electrode material**
31		CrNi 1.4435

	(1)		**(2)**		**(3)**		**(4)**		**(5)**		**(6)**	
Order code		/		-		-		-		-		-
Order example	202769	/	10	-	10	-	8	-	01	-	0035	-

(7)		**(8)**		**(9)**		**(10)**		**(11)**
	-		-		-		-	
1005	-	997	-	18.0	-	79	-	31

4 Identifying the device version

	(1)	**Basic type**
202781		JUMO digiLine CR HT25 (head transmitter with sensor type JUMO tecLine CR-S01)
	(2)	**Basic type extensio**n
10		Digital operation, plastic housing (JUMO digiLine)
15		Digital operation, metal case (JUMO digiLine)
20		Analog operation, plastic housing (with analog outputs)
25		Analog operation, metal case (with analog outputs)
30		Analog operation II (Junior) plastic housing (with analog outputs)
35		Analog operation II (Junior) metal case (with analog outputs)
40		Digital operation, plastic housing (IO-Link)
45		Digital operation, metal case (IO-Link)
50		Analog operation, plastic housing (with solid-state relays)
55		Analog operation, metal case (with solid-state relays)
60		Analog operation II (Junior) plastic housing (with solid-state relays)
65		Analog operation II (Junior), metal case (with solid-state relays)
	(3)	**Display**
00		Without display
10		With display
	(4)	**Version**
8		Standard with default settings
9		Customer-specific configuration (specification in plain text)
	(5)	**Language**
01		German
02		English
	(6)	**Cell constant**
0010		0.1 1/cm
	(7)	**Measuring insert**
1003		1× Pt100 in two-wire circuit
1005		1× Pt1000 in two-wire circuit
	(8)	**Process connection**
104		Screw connection G 1/2
	(9)	**Process connection material**
24		Stainless steel 1.4404
	(10)	**Electrode material**
24		Stainless steel 1.4404

	(1)		(2)		(3)		(4)		(5)		(6)		(7)		(8)		(9)		(10)
Order code		/		-		-		-		-		-		-		-		-	
Order example	202781	/	10	-	10	-	8	-	01	-	0010	-	1003	-	104	-	24	-	24

4.1.2 Devices for separate sensors (202762)

	(1)	**Basic type**
202762		JUMO digiLine CR ST10 (for separate sensor)
	(2)	**Basic type extension**
10		Digital operation, plastic housing (JUMO digiLine)
15		Digital operation, metal case (JUMO digiLine)
20		Analog operation, plastic housing (with analog outputs)
25		Analog operation, metal case (with analog outputs)
40		Digital operation, plastic housing (IO-Link)
45		Digital operation, metal case (IO-Link)
50		Analog operation, plastic housing (with solid-state relays)
55		Analog operation, metal case (with solid state relay)
	(3)	**Display**
00		without display
10		With display
	(4)	**Version**
8		Standard with default settings
9		Customer-specific configuration (specification in plain text)
	(5)	**Language**
01		German
02		English
	(6)	**Extra codes**
000		Without extra code
061		UL approval[ab]

[a] The approval stipulates use of the device indoors only.

[b] List of device versions with approval: ⇨ Technical data > Approvals and approval marks.

	(1)		(2)		(3)		(4)		(5)		(6)
Order code		/		-		-		-		/	
Order example	202762	/	10	-	10	-	8	-	01	/	061

4 Identifying the device version

4.2 Accessories

The following accessories are **not** UL-approved.

Type	**Part no.**
JUMO DSM software (**D**igital **S**ensor **M**anagement)	00655787
Sensor connection cable with M12 cable socket, 8-pole, with the ferrules at sensor end, 1.5 m long	00710954
Sensor connection cable with M12 cable socket, 8-pole, with the ferrules at sensor end, 5 m long	00710951
Sensor connection cable with M12 cable socket, 8-pole, with the ferrules at sensor end, 10 m long	00709544
M12 cable socket, 8-pole	00444312
M12 cable socket, 8-pole, shielded	00486503
IO-Link master upon request	
Device data (IODD) at www.jumo.de or at http://ioddfinder.io-link.com	
Pipe-mounted kit for device versions with stainless steel case	00515128

5.1 Mounting site and climatic conditions

The installation site should be, as far as possible, free from vibration. Electromagnetic fields, caused by equipment such as motors and transformers, should be avoided. The ambient temperature at the mounting site and the relative humidity must correspond to the technical data. Aggressive gases and vapors have a negative effect on the operating life of the device.

5.2 Dimensions of device versions with separate sensor

5.2.1 Device versions with plastic housing

Abmessungen JUMO digiLine-Elektronik

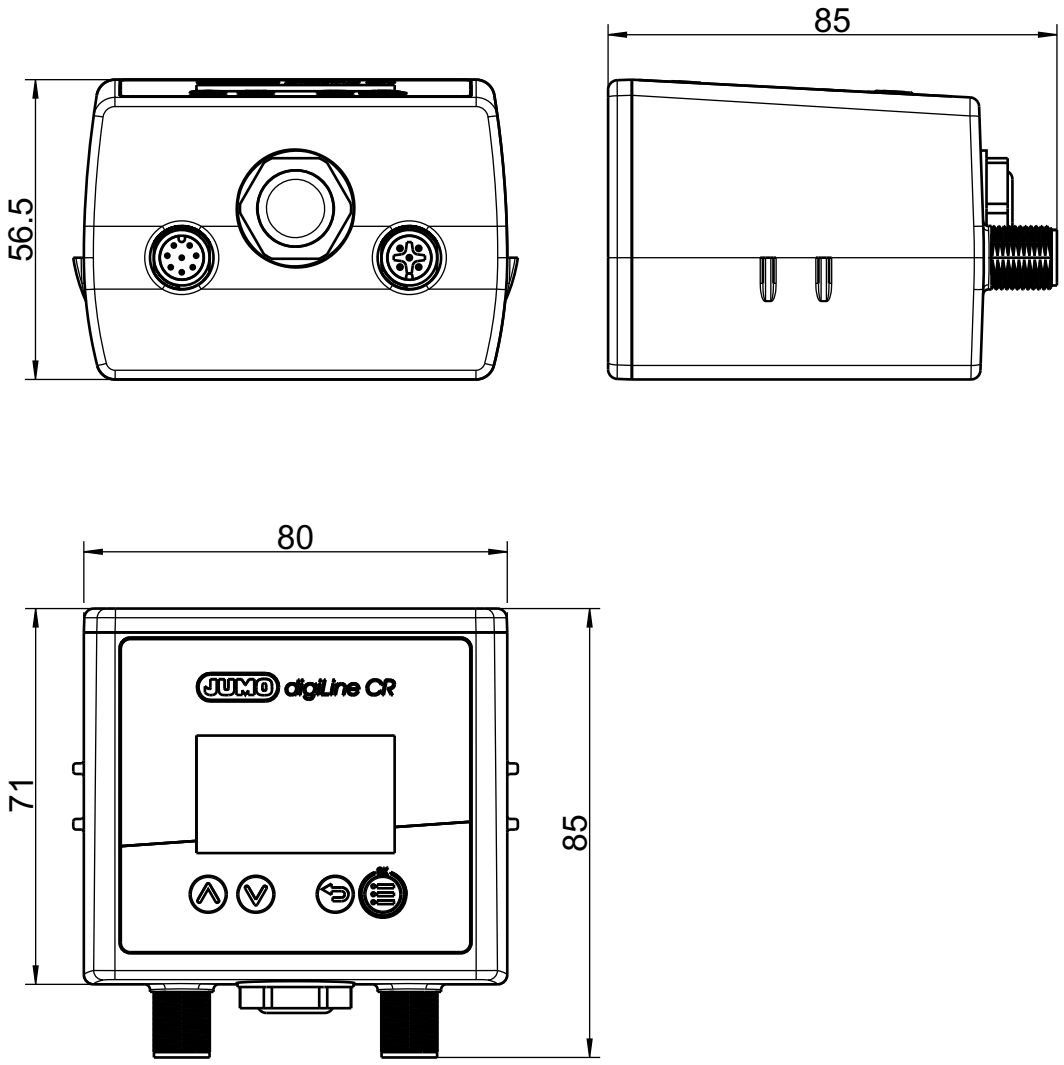

5 Mounting

Dimensions of the mounting plate for wall, pipe and DIN rail mounting

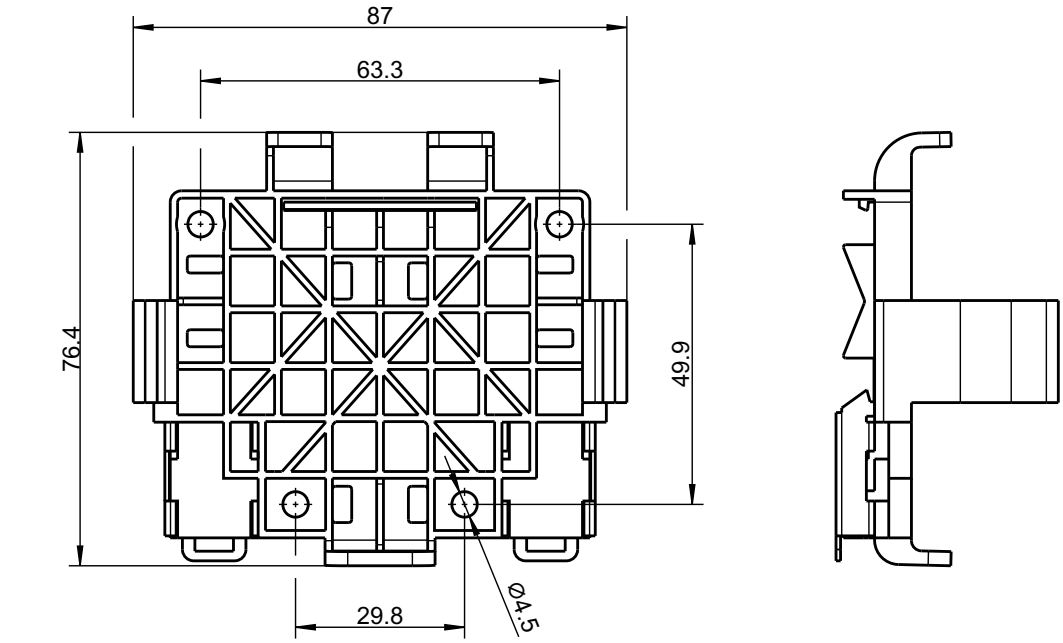

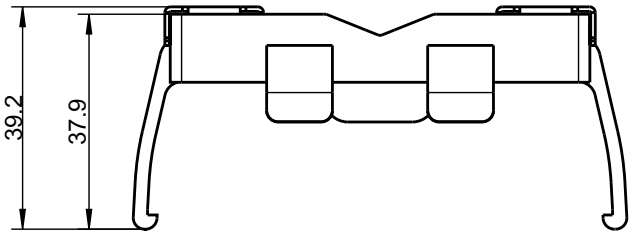

5.2.2 Device versions with stainless steel case

Dimensions of the JUMO digiLine electronic components

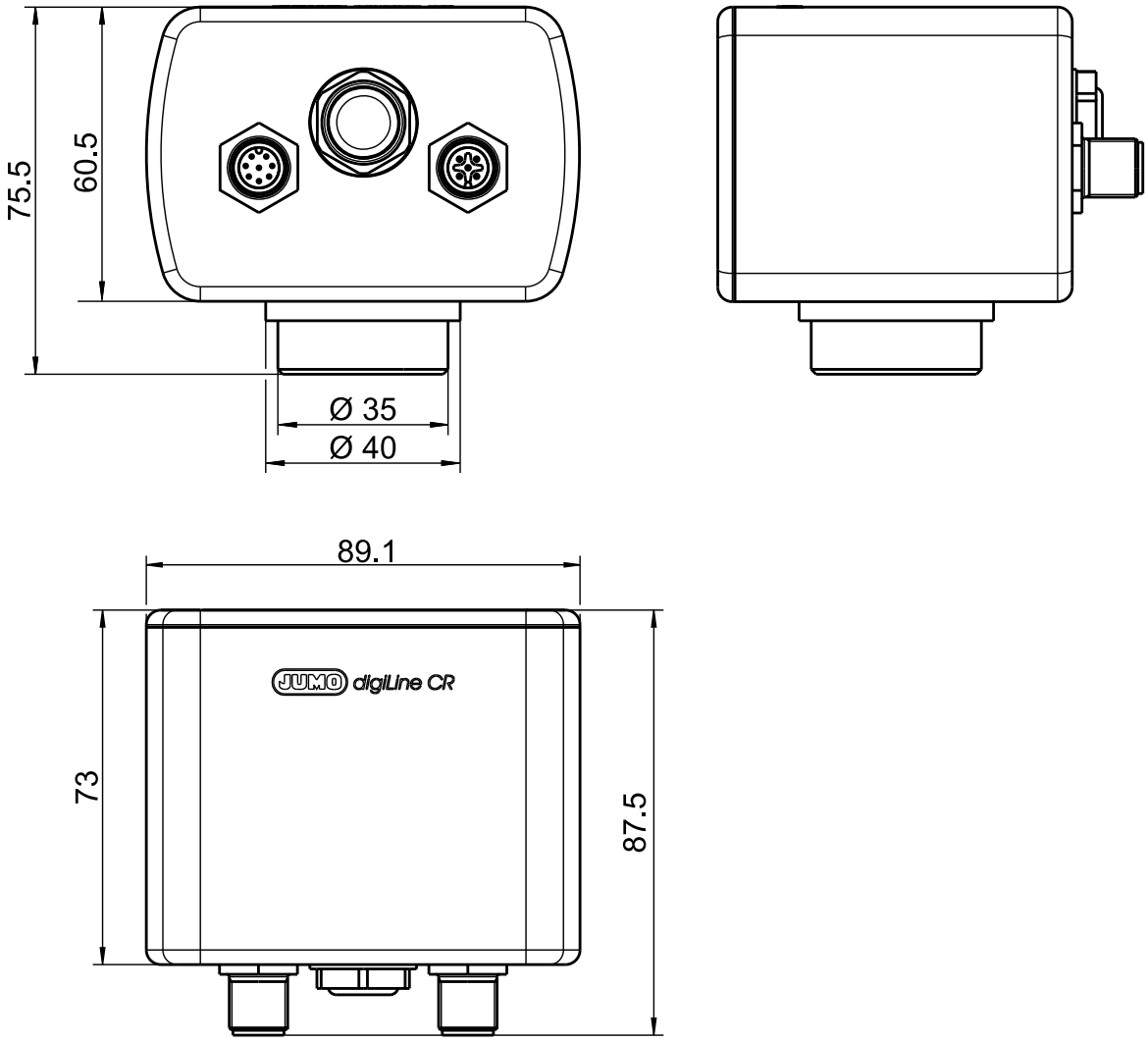

5 Mounting

Mounting plate dimensions

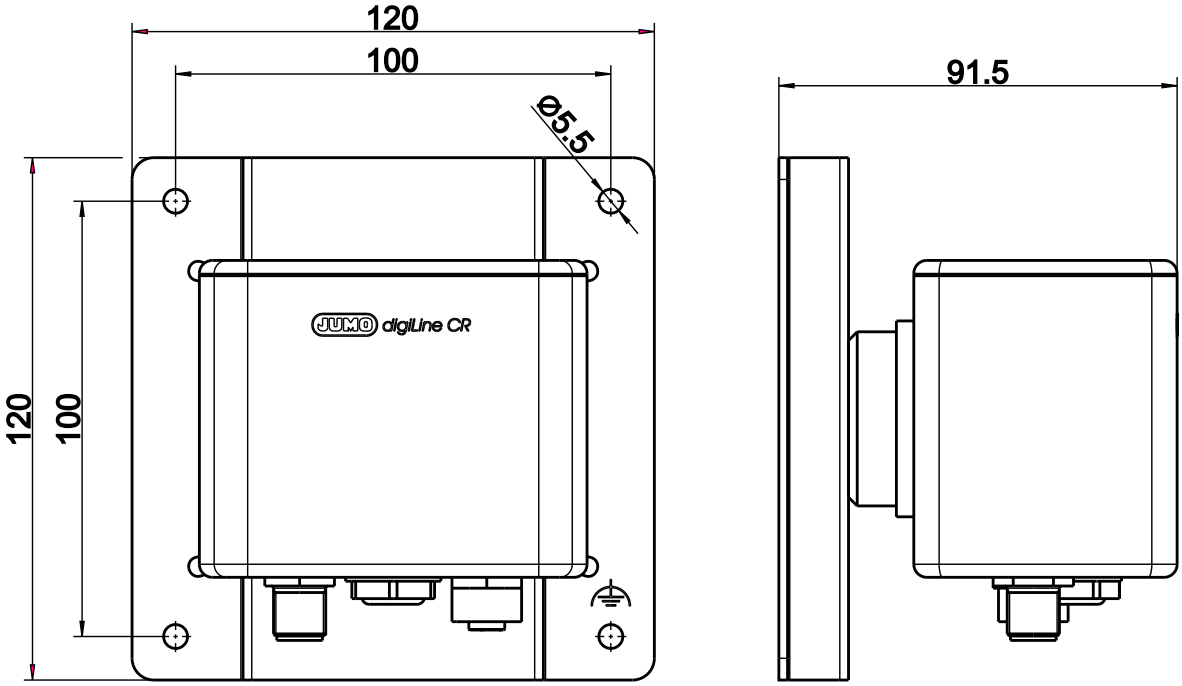

5.3 Dimensions of head transmitter

Dimensions of the JUMO digiLine electronic components with plastic housing and digital interfaces

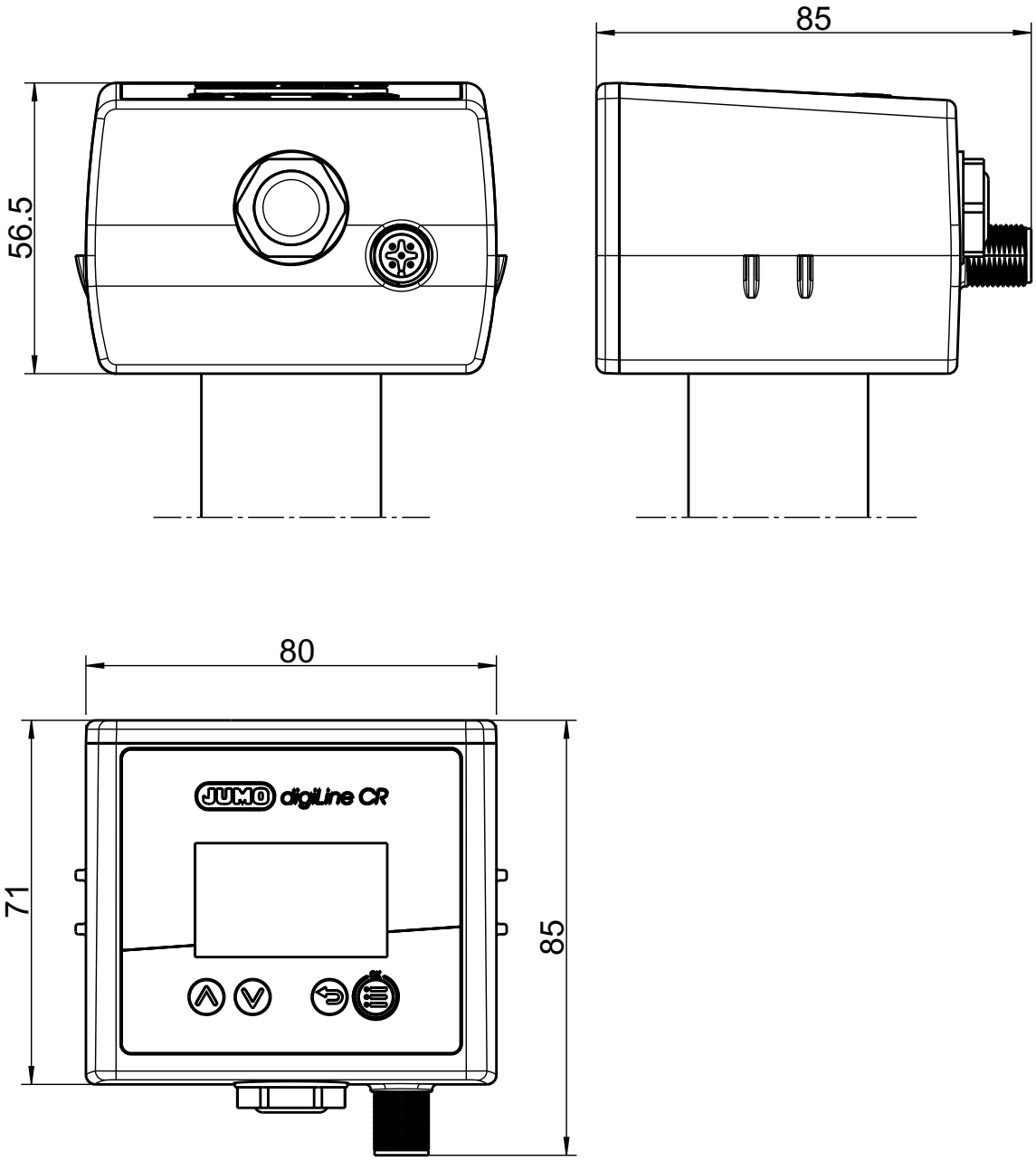

Dimensions of the JUMO digiLine electronic components with stainless steel case and digital in-

terfaces

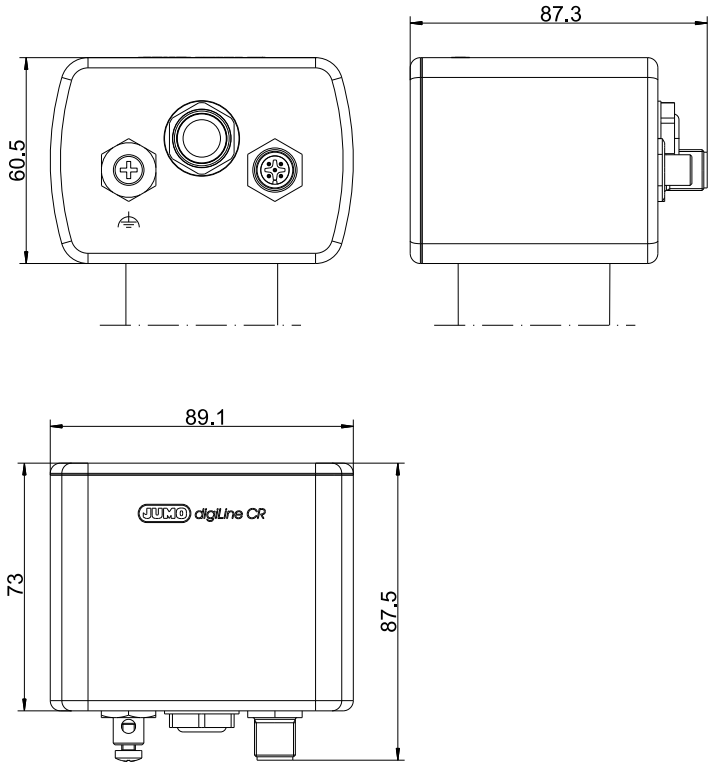

The following dimensional drawings show head transmitters with plastic housing as an example. The dimensions specified apply for all available device versions with plastic housing and stainless steel case.

202763 Process connection 104: Threads G 1/2A; cell constant 0.01 1/cm	202763 Process connection 104: Threads G 1/2A; cell constant 0.1 1/cm
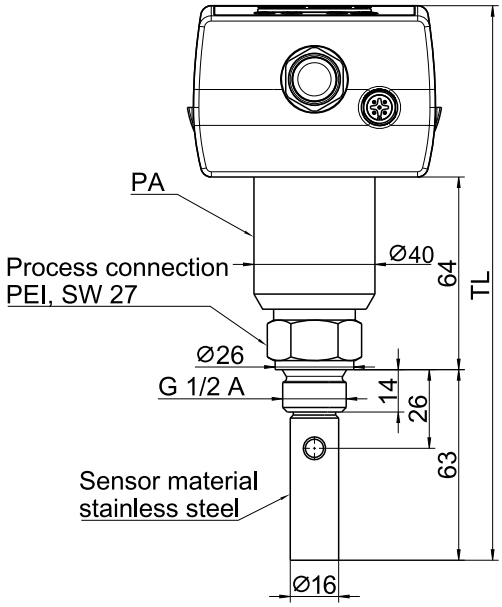	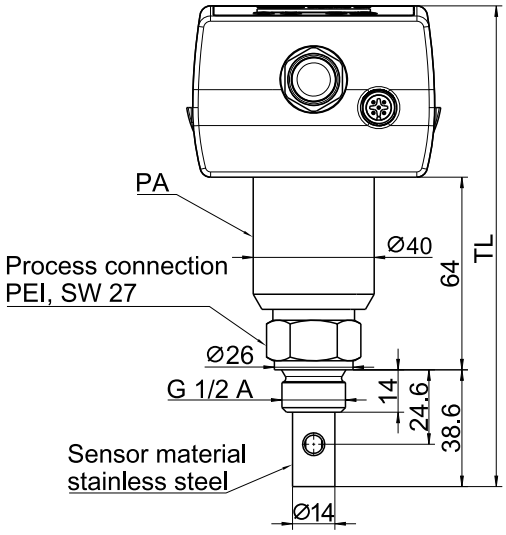
Plastic housing: TL = 183 Stainless steel case: TL = 187	Plastic housing: TL = 159 Stainless steel case: TL = 163

202763 Process connection 104: Threads G 1/2A; cell constant 1.0 1/cm	202764 Process connection 105: Threads G 3/4A; cell constant 0.1 1/cm
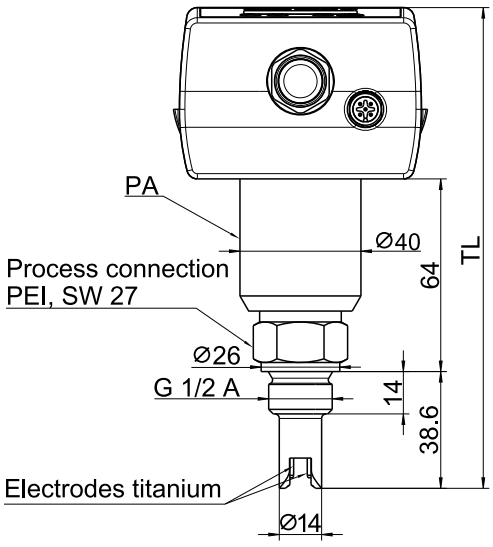	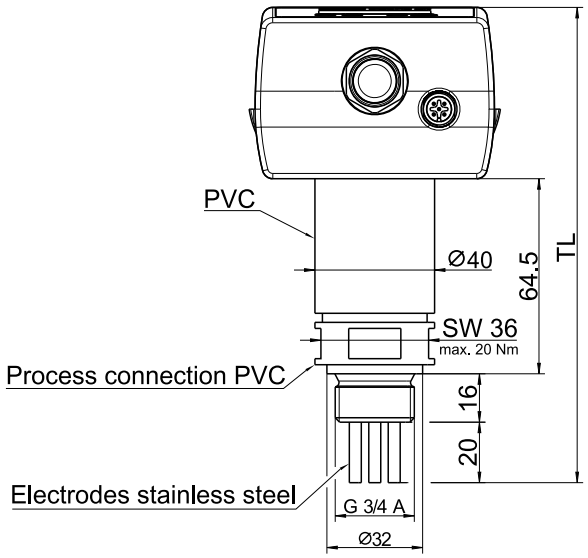
Plastic housing: TL = 159 Stainless steel case: TL = 163	Plastic housing: TL = 157 Stainless steel case: TL = 161

202764 Process connection 105: Threads G 3/4A; cell constant 1.0 1/cm	202764 Process connection 687, PVC: Stepped collar PVC DN 25; cell constant 0.1 1/cm
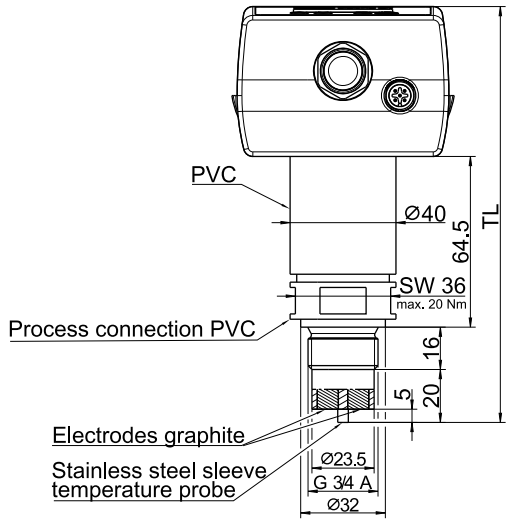	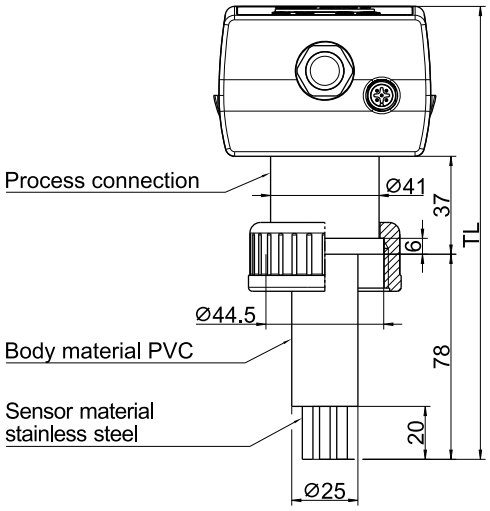
Plastic housing: TL = 157 Stainless steel case: TL = 161	Plastic housing: TL = 171 Stainless steel case: TL = 175

202764 Process connection 687, PVC: Stepped collar PVC DN 25; cell constant 1.0 1/cm	202765 Process connection 104, stainless steel: Screw connection G 1/2; cell constant 0.1 and 0.01 1/cm
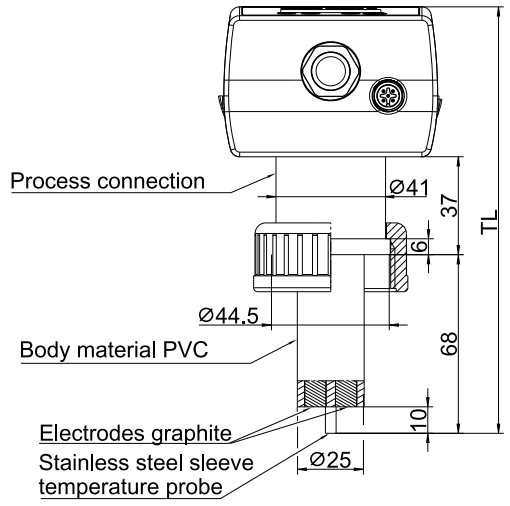	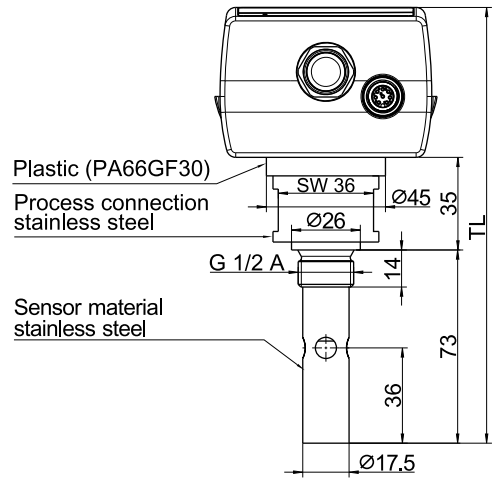
Plastic housing: TL = 161 Stainless steel case: TL = 165	Plastic housing: TL = 165 Stainless steel case: TL = 162

202765 Process connection 104, PVDF: Screw connection G 1/2; cell constant 0.1 and 0.01 1/cm	202765 Process connection 105: Threads G 3/4A; cell constant 0.1 and 0.01 1/cm
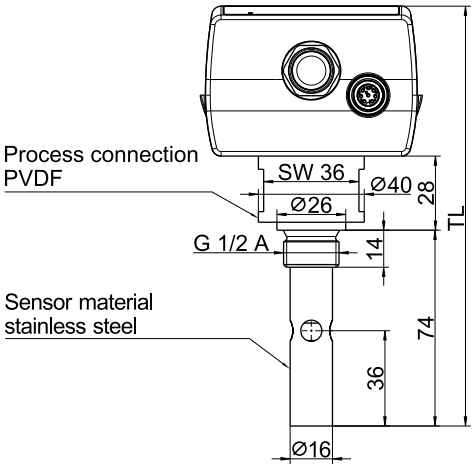	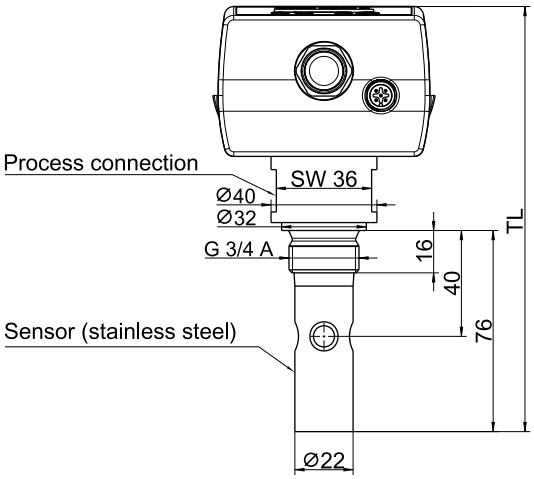
Plastic housing: TL = 159 Stainless steel case: TL = 163	Plastic housing: TL = 161 Stainless steel case: TL = 165

202765 Process connection 604: Taper socket DN 25; cell constant 0.1 and 0.01 1/cm	202765 Process connection 613: Clamping socket (clamp) DN 25; cell constant 0.1 and 0.01 1/cm
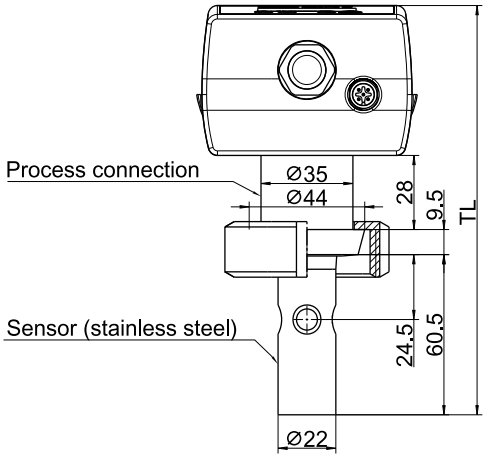	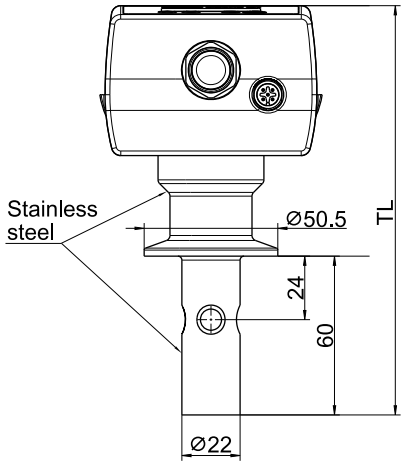
Plastic housing: TL = 155 Stainless steel case: TL = 159	Plastic housing: TL = 154.6 Stainless steel case: TL = 158.6

202766 Process connection 104: Screw connection G 1/2; cell constant 0.1 and 0.01 1/cm	202766 Process connection 613: Clamping socket (clamp); cell constant 0.1 and 0.01 1/cm
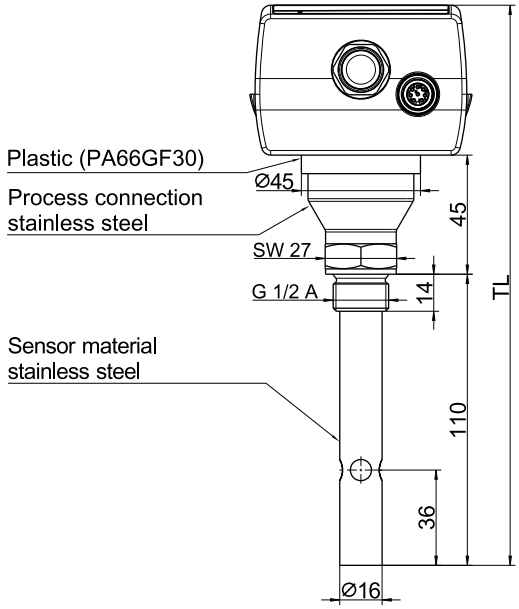	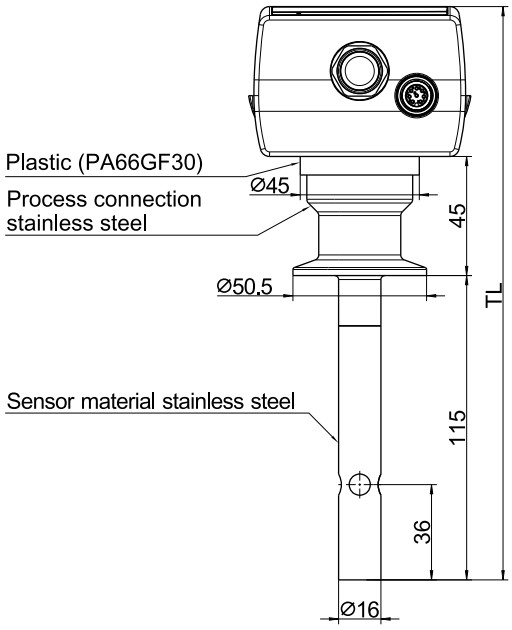
Plastic housing: TL = 212 Stainless steel case: TL = 209	Plastic housing: TL = 217 Stainless steel case: TL = 214

202767 Process connection 997: PEKA adapter system; cell constant 0.1 and 0.01 1/cm	202768 Process connection 105: Screw connection G 3/4; cell constant 1.0 1/cm
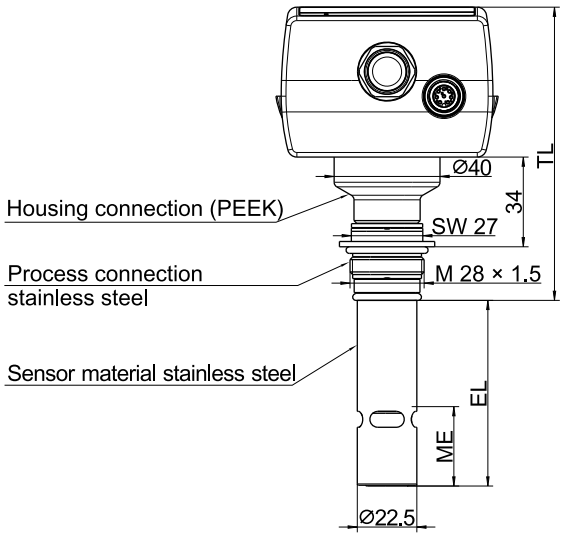	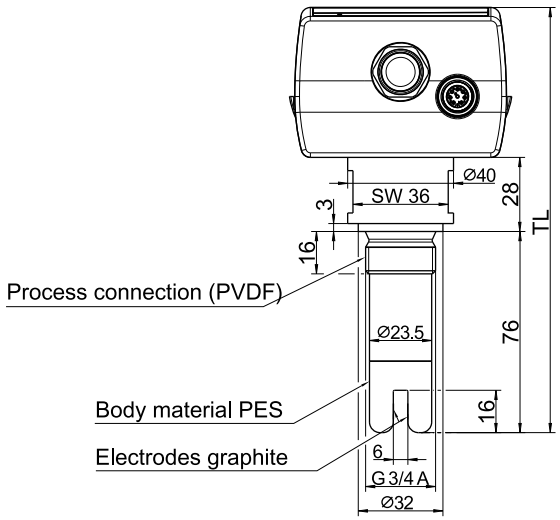
Plastic housing: TL = 111 Stainless steel case: TL = 115	Plastic housing: TL = 161 Stainless steel case: TL = 165
Available insertion length: EL = 40 mm EL = 70 mm	-
Minimum immersion depth: ME = 30 mm	-

202768 Process connection 106: Screw connection G 1; cell constant 1.0 1/cm	202769 Process connection 997: PEKA adapter system; cell constant 0.35 1/cm
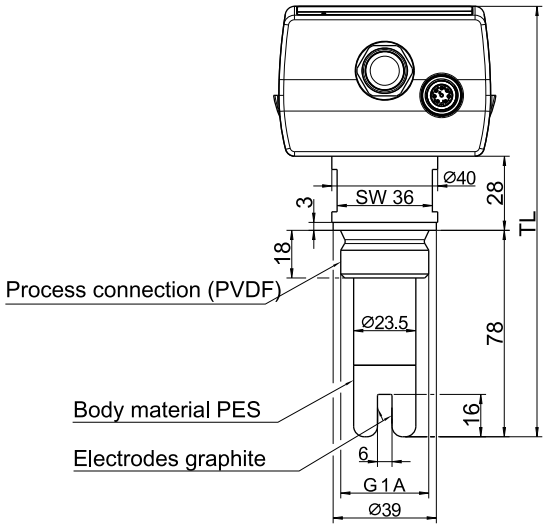	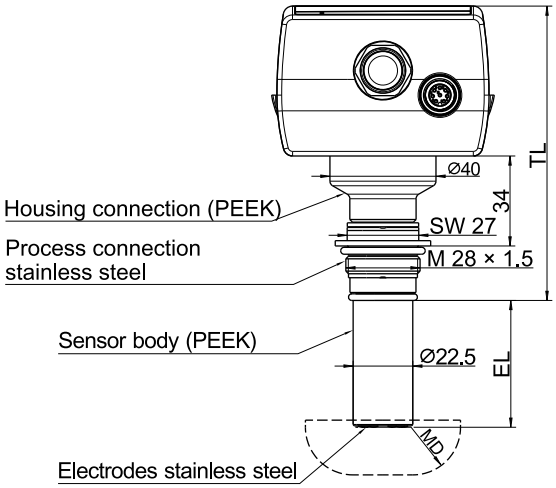
Plastic housing: TL = 163 Stainless steel case: TL = 167	Plastic housing: TL = 111 Stainless steel case: TL = 115
-	Available insertion lengths: EL = 18 mm EL = 38 mm EL = 48 mm
-	Minimum distance to container wall: MD = 18 mm

202781 Process connection 104: Screw connection G 1/2; cell constant 0,1 1/cm
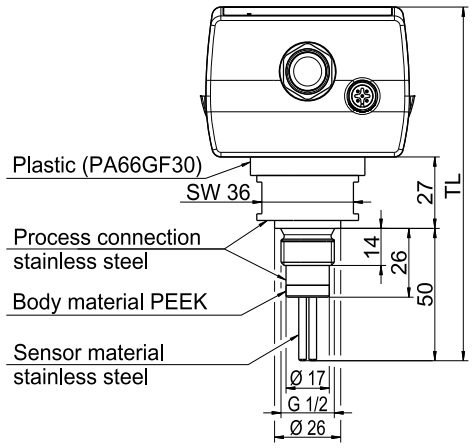
Plastic housing: TL = 134 Stainless steel case: TL = 131

5 Mounting

5.4 Mounting devices with a separate sensor

5.4.1 JUMO digiLine CR with plastic housing

Wall mounting

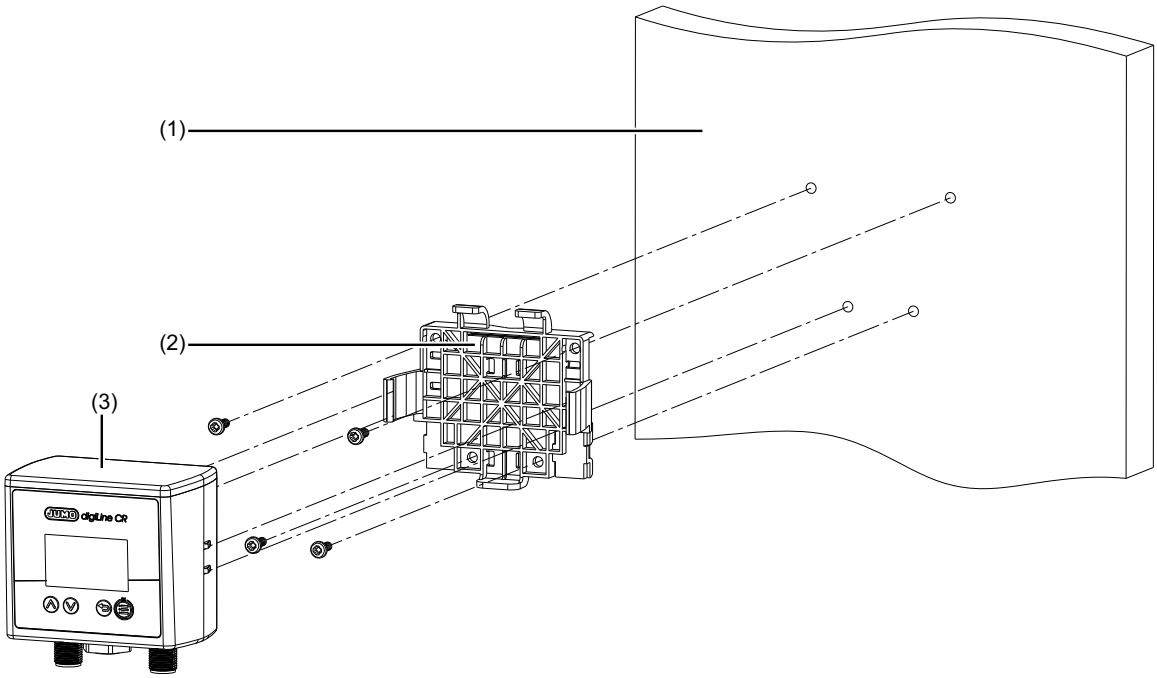

1 Wall/mounting surface
2 Mounting plate included in the scope of delivery of the JUMO digiLine CR
3 JUMO digiLine CR

DIN-rail mounting

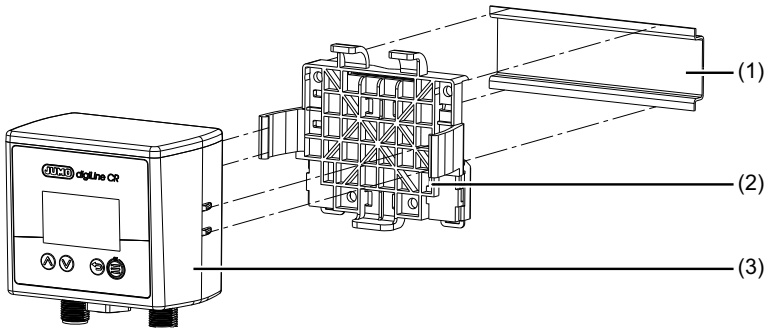

1 DIN rail
2 Mounting plate included in the scope of delivery of the JUMO digiLine CR
3 JUMO digiLine CR

Pipe mounting

When used in conjunction with cable ties, the mounting plate allows mounting of the device on horizontal and vertical pipes or masts.

This type of device installation has not been tested for UL-compliant applications and is therefore not permitted!

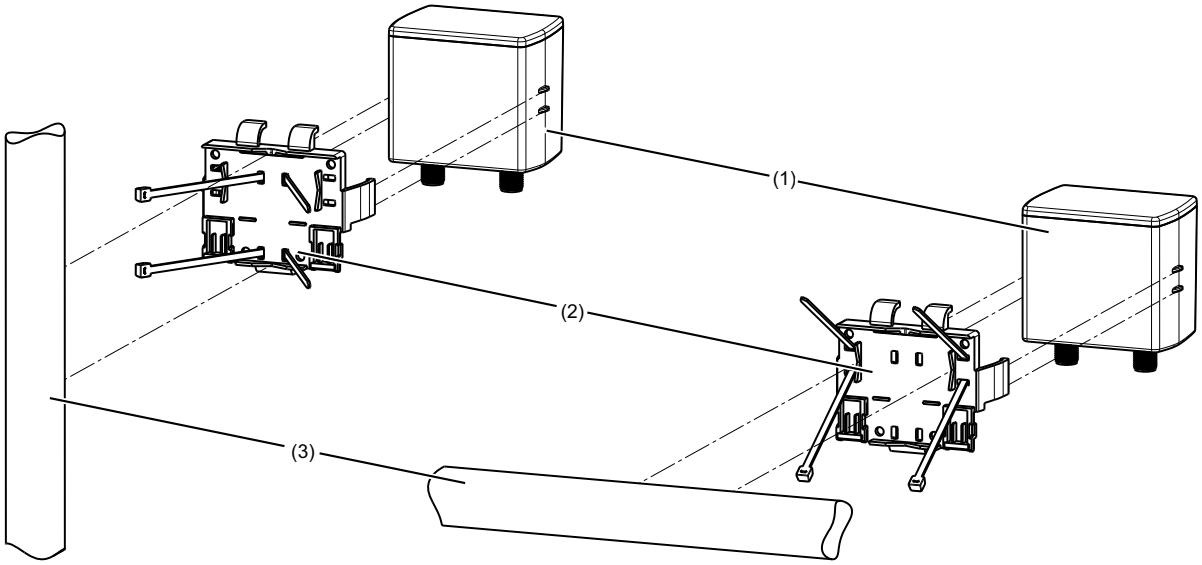

1 JUMO digiLine CR
2 Mounting plate from the scope of delivery of the JUMO digiLine CR with installed cable ties
3 Pipe/mast (at customer's site); cable ties are not included in the scope of delivery of the device.

5.4.2 JUMO digiLine CR with stainless steel case

Wall mounting

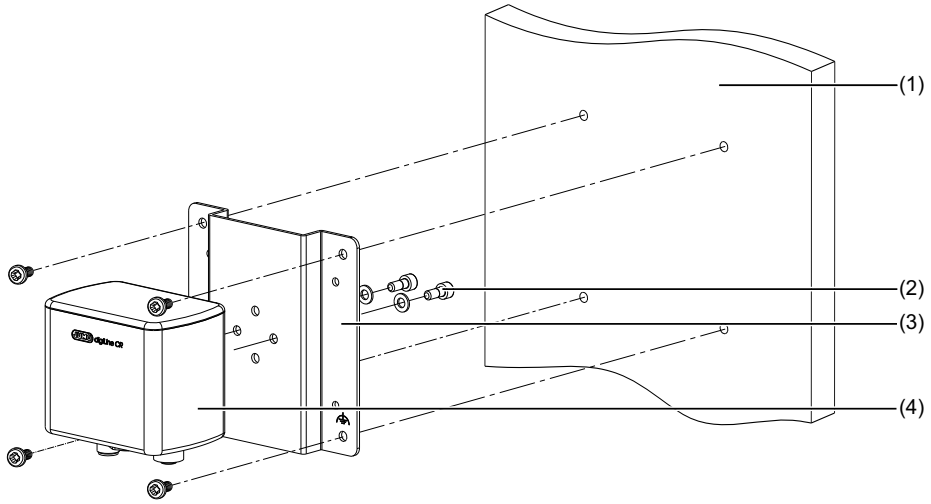

1 Wall/mounting surface
2 Screws and washers from the scope of delivery of the JUMO digiLine CR
3 Mounting plate included in the scope of delivery of the JUMO digiLine CR
4 JUMO digiLine CR

Pipe mounting

The pipe-mounted kit is available as an accessory and is suitable for mounting the device on horizontal or vertical pipes or masts.

chapter 4.2 "Accessories", Page 30

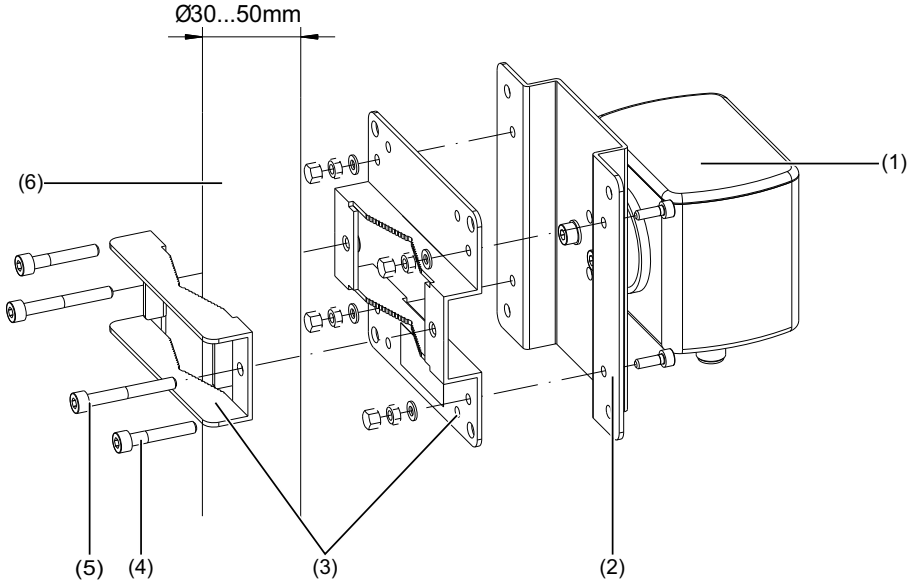

1 JUMO digiLine CR
2 Mounting plate included in the scope of delivery of the JUMO digiLine CR
3 Pipe-mounted kit (see accessories)
4 Screws M5 × 30 for pipe diameters of 30 to 40 mm
5 Screws M5 × 40 for pipe diameters of 40 to 50 mm
6 Pipe/mast (customer provision)

5.5 Mounting of head transmitters

JUMO digiLine CR Head transmitters are installed in suitable fittings, process connections or holders that accommodate the corresponding sensor type for your device. Given the variety of different sensor types available in conjunction with the JUMO digiLine CR as head transmitter, there is a corresponding variety of mounting possibilities. Please refer to the operating manual for the specific conductivity sensor to mount the various sensor types. You can determine the sensor type for your device from the order code on the nameplate and the order details in this operating manual. The operating manuals for the sensor type appropriate for your device can be found on the JUMO website using the product group number in the order details.

⇨ chapter 4 "Identifying the device version", Page 17

5 Mounting

6.1 Installation notes

CAUTION!

The JUMO digiLine and IO-Link systems operate with different voltages and connection assignments on the M12 sockets for the interface connection.

If a device is connected to an interface not intended for it, the device may be damaged.

▶ Make sure that devices are connected only to interface types for which they are intended!

6.2 Connection diagram

General information

The line connections of JUMO sensors with JUMO digiLine electronics are, with few exceptions, made using preassembled cables. The union nuts on the cable connecting sockets are tightened to a maximum torque of 0.5 Nm. The pin assignment shown here is intended primarily to provide an overview and serve as an aid when troubleshooting.

Connection	Terminal assignment	
	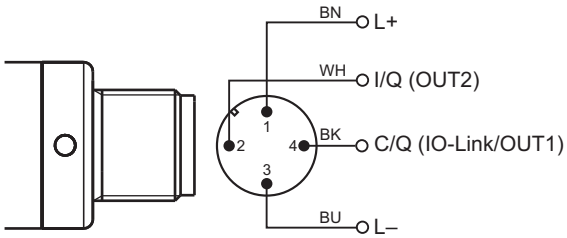	
	M12 x 1 round plug (A-coded, non-rotating)	
Switch operation		
Voltage supply[a] DC 18 to 30 V	1 BN (brown)[b] 3 BU (blue)	L+ L-
Switching output 1	4 BK (black)	C/Q = OUT1
Switching output 2	2 WH (white)	I/Q = OUT2
IO-Link operation		
Voltage supply[a] DC 18 to 30 V	1 BN (brown) 3 BU (blue)	L+ L-
IO-Link	4 BK (black)	C/Q = IO-Link
Switching output 2	2 WH (white)	I/Q = OUT2

[a] The voltage supply for the JUMO digiLine electronic components must comply with SELV requirements; alternatively, an energy-limited electrical circuit according to DIN EN 61010-1 and UL 61010-1 can be applied.

[b] The color coding is **only** valid for A-coded standard cables!

6 Electrical connection

Sensor connection

A connecting cable with wire end ferrules on the sensor end is available for the JUMO digiLine CR in device versions with a separate sensor (see accessories). This cable must be provided with a cable socket suitable for the sensor selected.
An 8-pole M12 connector is available for connecting JUMO sensors with a 5-wire fixed cable (see accessories).
Connect your JUMO sensor in line with the following tables.

CAUTION!

▶ The connection lines must be routed **directly** to the transmitter, not over terminal blocks.

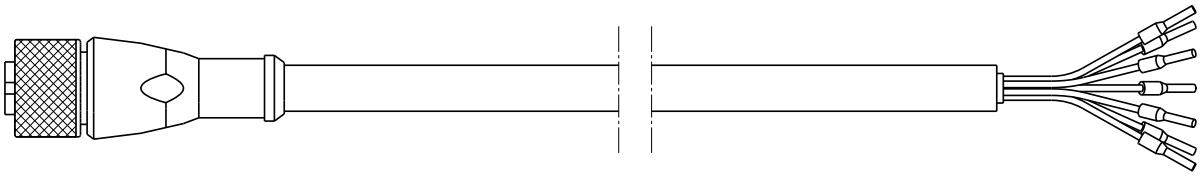

8-pole sensor connection

Pin	Wire color	Function	Symbol
1	Red	Outer electrode 1	Socket 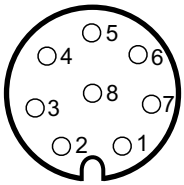 Connection side 
2	Gray	Inner electrode 1	
3	Yellow	Temperature 1	
4	Green	Temperature 2	
5	Pink	Inner electrode 2	
6	blue	Outer electrode 2	
7	Brown	Temperature 3	
8	White	Shield	

5-pole sensor connections – 8-pole sensor connecting cable

Sensor connecting cable 8-pole			Sensor-side connections	
Pin	**Wire color**	**Function**	**Angular connector**	**M12 connector 5-pole**
1	Red	Outer electrode 1	⏚	1
2	Gray	Inner electrode 1		
3	Yellow	Temperature 1	1[a]	3[b]
4	Green	Temperature 2	3[a]	4[b]
5	Pink	Inner electrode 2	2	2
6	blue	Outer electrode 2		
7	Brown	Temperature 3	3[a]	5[b]
8	White	Shield	-	-

[a] Two-wire circuit

[b] 3-wire circuit

5-pole sensor-side fixed connecting cable with 8-pole M12 connector

M12 connector 8-pole		Fixed cable on the sensor
Pin	**Function**	**Wire color**
1	Outer electrode 1	White
2	Inner electrode 1	
3	Temperature 1	Yellow[a]
4	Temperature 2	Green[a]
5	Inner electrode 2	Brown
6	Outer electrode 2	
7	Temperature 3	-
8	Shield	Shield

[a] Two-wire circuit

6.2.1 Functional ground connection for device versions with stainless steel case

Device version with separate sensor

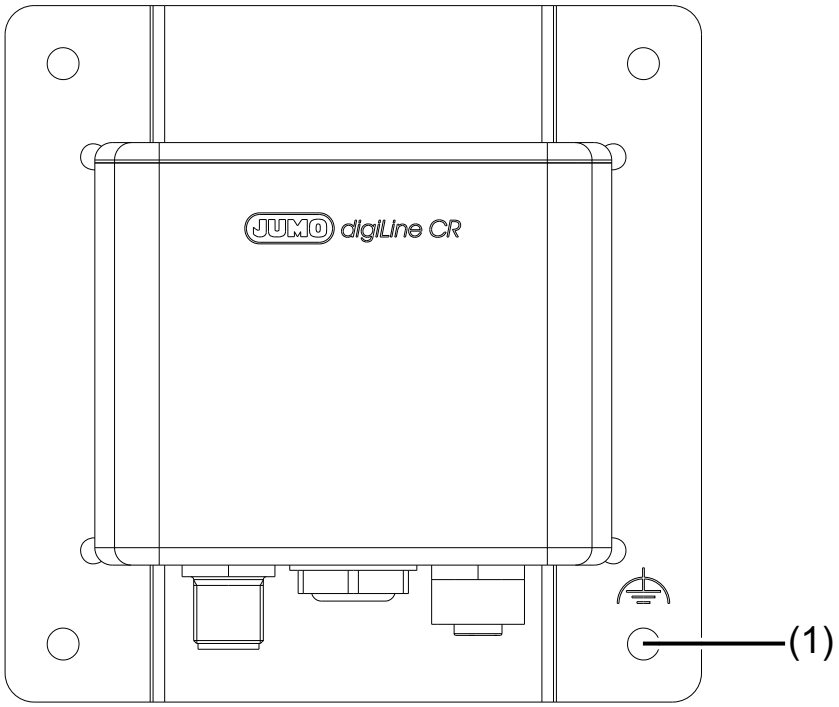

1 Connection of functional earth via fastening screw on the mounting plate

Head transmitters

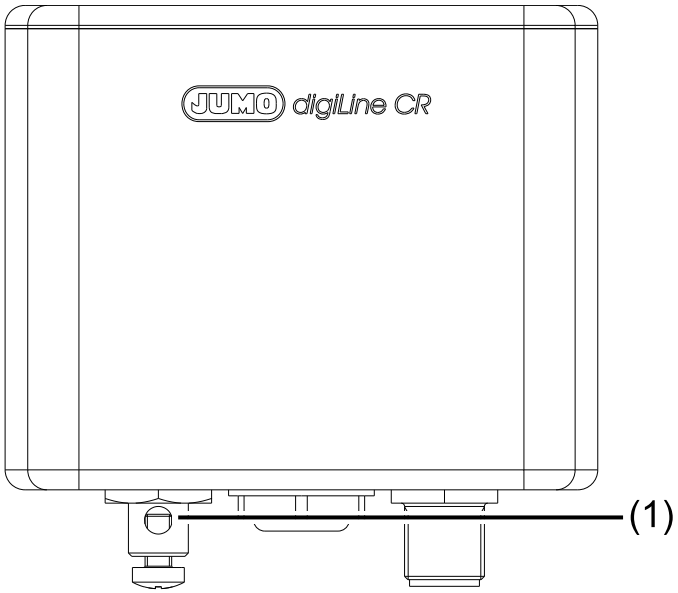

1 Functional earth terminal

6.2.2 Galvanic isolation

JUMO digiLine CR with IO-Link interface

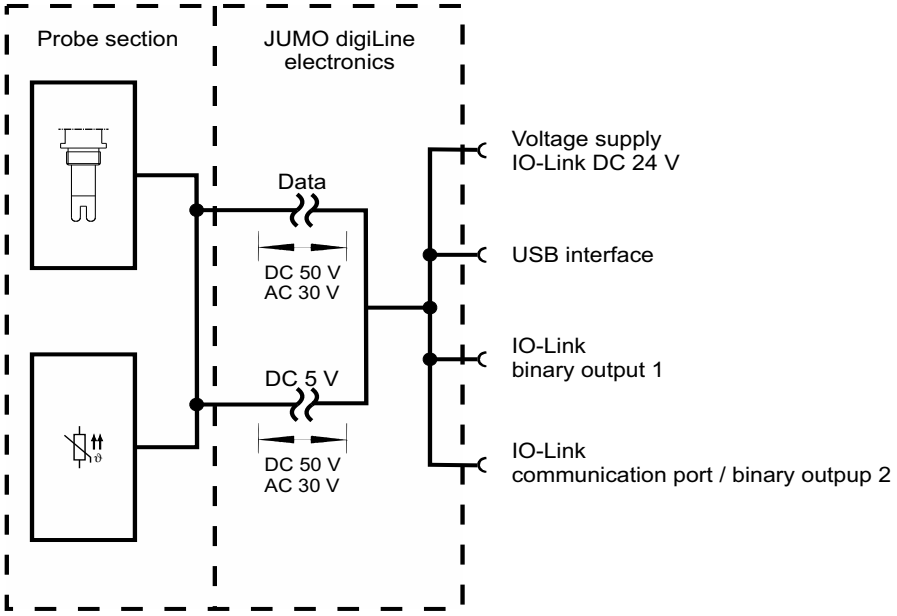

6 Electrical connection

6.2.3 Connection examples

IO-Link operation with 1 switching output	Switch operation with 2 switching outputs
p switching (PNP)	p switching (PNP)
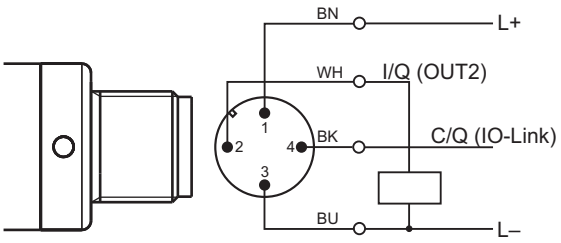	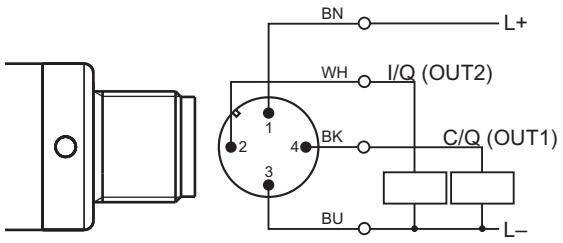
n switching (NPN)	n switching (NPN)
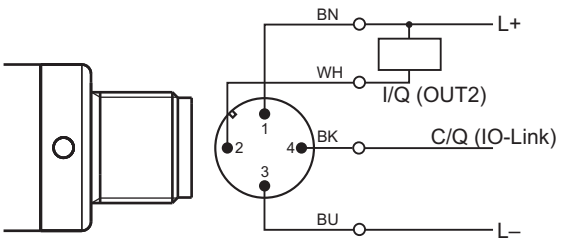	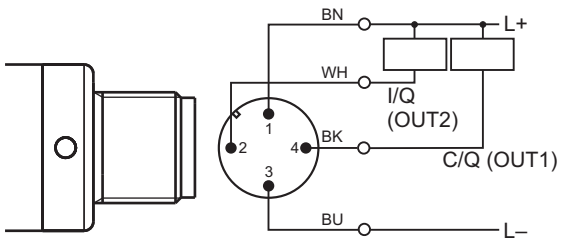

7.1 General Information

Operating the JUMO digiLine CR

The JUMO digiLine CR is available in device versions with or without display and membrane keyboard for local operation (see "Display and control elements of the JUMO digiLine CR", Page 14).

All device versions have a status LED inside the housing which shines through the transparent housing threaded coupling. The device versions with plastic housing without a display also have a status LED on the front of the device.

Depending on the date of manufacture of the device, the status is displayed either via the status LED on the front or the internal status LED.

The status LEDs show the operating statuses of the device. The operating statuses are signaled as follows:

- **Flashing green in one-second interval:** Measuring mode
- **Flashing red in one-second interval:** Error (see chapter 10 "Troubleshooting in the event of faults", Page 67)
- **Flashing red very quickly (5× per second):** Serious error (see chapter 10 "Troubleshooting in the event of faults", Page 67)

Device versions with display and operating panel show their measured values and operating status (e. g. error status) locally and allow local access to some settings, device information and calibration functions of the device. There are 4 operating keys on the membrane keyboard:

Explanation	Operating key
"OK" Opens submenus and confirms entries	
"Back" Returns to the previous menu level; leaves Settings and discards entries and setting changes	
"Up" Move cursor up in the current menu level, scroll up or adjust setting values higher When the "Up" operating key is held down while adjusting numerical values, the change in the value accelerates.	
"Down" Move cursor down in the current menu level, scroll down or adjust setting values lower When the "Down" operating key is held down while adjusting numerical values, the change in the value accelerates.	

Configuration and calibration via interfaces

All device versions can be connected to a PC using USB. The device can be configured and calibrated on a PC using the **JUMO DSM software**. Refer to the operating manual for the JUMO DSM software for more details.

The USB interface is located behind the device's housing threaded coupling. Remove the housing threaded coupling to access the USB interface. Note that the protection type of the device is given for the sealed housing. Once you have finished working on the PC, the housing threaded coupling must be screwed into the housing opening of the device again.

Device versions with an **IO-Link interface** can be configured by means of the JUMO DSM software as well as **IO-Link Engineering Tools**.

7 Operation

Measuring mode

After the JUMO digiLine has been switched on CR the JUMO logo appears briefly on the display in device versions with a display. The device then switches to the measuring mode. The "Up" and "Down" operating keys can be used to navigate through 3 different display screens:

- Main display screen with electrolytic conductivity and temperature
- Detailed measurement display with compensated and uncompensated measured values
- Bar graph display of the sensor stress level (for degree of current sensor stress, seechapter 13.5 "CIP/SIP", Page 92)

In device versions without a display, the flashing green status LED indicates that the device is operating and there are no errors.

7.2 Device menu

The device menu is opened from the measuring mode by pressing the "OK" operating key. The submenus listed in the following table are available here.

Submenu	Explanation
Log-on/Log-out	The user logs on and out here. In addition, passwords can be changed here. ⇨ chapter 7.2.1 "Log-on/Log-out", Page 55
Calibration	Functions for calibrating the JUMO digiLine CR with the currently connected sensor ⇨ chapter 7.2.3 "Calibration", Page 56
Configuration	Device settings ⇨ chapter 13 "Configuration", Page 89
Device info	Information on device hardware and software. ⇨ chapter 7.2.4 "Device information", Page 56
Service	Functions and information on diagnosis and maintenance of the device hardware ⇨ chapter 7.2.5 "Service", Page 56

To navigate through the menu hierarchy, use the "Up" and "Down" operating keys to move the cursor to the submenu you wish to open. You can recognize the position of the cursor by the inverted appearance of the highlighted menu entry. Pressing the "OK" operating key opens the submenu marked by the cursor. Arrow symbols (pointed brackets) at the end of the line after menu entries indicate that additional submenus are available. If the number of menu entries in a menu exceeds the number of display lines, a scroll bar appears at the right edge of the display.

To change setting values (e.g. configuration settings or parameters in the Service menu) proceed through the menu structure to the desired setting item. Press the "OK" operating key. The setting value now starts to flash. While it is flashing, you can change the value with the "up" and "down" operating keys. To apply the new setting value, press the "OK" operating key again. The value stops flashing and is applied in the device.

7.2.1 Log-on/Log-out

You can log on to the device in the "Log-on/Log-out" submenu. Depending on the rights required, this is necessary to change device settings and to perform calibrations. When you are logged in, the logged-in user is shown in the header of the measurement display.

In addition, you can log out again or change passwords in the "Log-on/Log-out" submenu. The password for a user can be changed only when the user is logged in.

Factory-set passwords

Users	Administrator	User
Factory-set password	9200	300
Default rights	• General operation (measuring mode and device information)	• General operation (measuring mode and device information)
	• Calibration rights • Administrator rights	

Logon

Accessing a menu: Device menu > Log-on/Log-out > Logon

After Logon opens, the device requires that a user be selected (flashing user name). Use the "Up" and "Down" operating keys to select the desired user and confirm by pressing the "OK" operating key. The password is requested next (flashing display). The password is a numerical value. You use the "Up" and "Down" operating keys to change the password. Press the "OK" operating key to confirm the entry.

After successful logon, the logged-in user appears in the header (flashing) in the measuring mode.

Logoff

Accessing a menu: Device menu > Log-on/Log-out > Logout

Opening the menu item "Logoff" logs off logged in users from the device. The device then signals successful logoff in the display and you can return to the menu hierarchy or measured-value display by means of the "Back" key.

Change the password

Accessing a menu: Device menu > Log-on/Log-out > Change password

Log on the user for whom the password is to be changed and then open "Change password".

Once you have accessed "Change password", you are requested to enter a new password for the logged-in user (flashing password value "0"). You now use the "Up" and "Down" operating keys to change the password value to the desired value. Finally, you confirm the new password by pressing "OK" operating key. The device then indicates successful acceptance of the new password and you can use the "Back" operating key to return to the menu hierarchy or measured value display.

7.2.2 User level

The user level consists of a user-defined list of parameters and configuration settings. Up to 10 parameters can be saved. You need the JUMO DSM software to configure the user level. Using this software, the user level can be created in the configuration menu of the JUMO digiLine electronics connected to the JUMO DSM software.

The user level can be opened from the device menu only if it has been configured beforehand with the aid of the JUMO DSM software. If this is not possible, there is no user level present in the device menu. Opening the user level provides easy and uncomplicated access to the selected parameters and settings. These can be edited from here.

7.2.3 Calibration

You can find all functions for calibrating your sensor in this menu. A detailed description of the calibration procedure can be found in chapter 9 "Calibration", Page 59.

7.2.4 Device information

In device versions with a display, the "Device info" submenu is available for checking and diagnosis purposes. Information on the device hardware and software is shown here:

- **Version:** Version information on device hardware and software
- **Device version:** Description of your device version
- **Sensor information (for head transmitters only):** Information and data regarding the sensor section of the head transmitter
  ⇨ chapter 11.2 "Sensor data", Page 69

7.2.5 Service

Maintenance functions and functions for setting the device hardware are found in the "Service" menu:

- **Contrast:** Sets the display contrast in 10 steps - adjustable by means of the "Up" and "Down" operating keys
- **CIP/SIP counter:** Display of the number of CIP/SIP cycles already performed in response to exceeding the CIP/SIP temperatures and status display of the CIP/SIP alarms. The CIP/SIP temperatures are set in the configuration data (see chapter 13.5 "CIP/SIP", Page 92).

General information

Startup of the JUMO digiLine CR with IO-Link interface is described in the following.



CAUTION!

The electrical characteristics of analysis sensors are dependent upon numerous factors, e.g. aging and wear.

For accurate measurements, analysis sensors must be calibrated.

▶ In the course of startup, it is necessary to ensure that the sensor was calibrated correctly. This can be done either during startup or also in advance on a PC with the JUMO DSM software.
⇨ chapter 9 "Calibration", Page 59



WARNING!

Errors during installation, mounting, or configuration of sensors with JUMO digiLine electronics can disrupt proper execution of the downstream process or cause damage.

▶ For this reason, it is always necessary to provide safety devices that are independent of the device and to allow settings to be made only by technical personnel.

Startup of a JUMO digiLine CR with IO-Link interface

You use the engineering system of your automation system to start up IO-Link devices. Incorporate the JUMO digiLine C with IO-Link interface into your automation system in the usual way. Configuring and setting parameters is also possible here. Calibrating from the IO-Link master is not possible.

Alternatively, the JUMO digiLine CR with IO-Link interface can be connected to a USB port on a PC and configured, parameterized and calibrated here using the JUMO DSM software.

Language selections on device versions with display

With the device switched on and in the measuring mode, press and hold the menu key until the display on the device changes to language selection. Using the "up" and "down" operating keys, you can now select one of the operating languages displayed with the cursor and then confirm your selection with the "OK" operating key.

8 Startup

8.1 Functional test

Functional check on the PC

The JUMO DSM software enables a sensor with JUMO digiLine electronics to be checked for proper operation. The software provides the ability to display current measured values on a PC.

⇨ JUMO DSM software operating manual

Functional check on an IO-Link master

The JUMO digiLineCRfunctions can be checked with the aid of a PLC and appropriate software on a PC. The JUMO DSM software can assist here by testing operation of the JUMO digiLineCRin advance if it becomes necessary to limit problems to the functionality of the interface when testing on the IO-Link master.

9.1 General information

The actual electrical characteristics of analysis sensors always deviate somewhat from the nominal specifications. The reasons for this include:

- Like every measuring instrument, analysis sensors always have a certain uncertainty of measurement that results from manufacturing tolerances.
- During use, analysis sensors are exposed to chemical processes. Deposits and wear phenomena caused by these processes result in changes of the electrical characteristics of sensors.

To optimize the accuracy of measurements, analysis sensors must be calibrated. Calibrations are required:

- during installation or when changing a sensor
- regularly at time intervals that must be specified by the user
- if implausible measured values are displayed
- if process conditions change (e. g. as the result of equipment modification)

Each successfully completed calibration of the relative cell constant and TC calibration is recorded in the calibration logbook. The calibration logbook can be viewed on the PC using the JUMO DSM software.

9.2 Calibration methods for CR conductivity sensors (conductive)

Rel. cell constant

The deviation from the nominal cell constant of a CR sensor is described by the relative cell constant. The relative cell constant is determined by making a measurement in a test solution with a defined conductivity.

Depending on the mode set for the relative cell constant in the configuration of the conductivity input, either a common relative cell constant is used for all 4 measuring ranges or a relative cell constant is determined separately for each measuring range. If "One cell constant per measuring range" has been set, a separate calibration of the cell constant must be performed for each measuring range.

⇨ chapter 13.3.1 "CR input (resistivity conductivity)", Page 89

Temperature coefficient

The temperature coefficient is a measure of the temperature dependence of the electrolytic conductivity of a liquid. It is used to compensate for the effect of temperature when measuring the electrolytic conductivity. When performing a temperature-compensated conductivity measurement, the conductivity value measured is always indicated with reference to the fixed reference temperature. With the aid of the temperature coefficient, the value of the electrolytic conductivity displayed at the reference temperature is calculated from the current measured values of conductivity and temperature of the liquid.
The reference temperature is set in the configuration.

⇨ chapter 13.3.1 "CR input (resistivity conductivity)", Page 89

The temperature coefficient is determined from 2 measurements in a sample of the process medium from your system at different temperatures (reference temp. and operation temp.). The reference temperature is obtained from the configuration. The operation temp. (usual temperature of the process in your system) is entered by the user during the calibration or acquired automatically. The two temperatures must differ from each other by more than 6 °C.

TC curve (for nonlinear temperature coefficients)

If the conductivity of a liquid whose temperature coefficient changes with temperature has to be measured, this method can determine 6 temperature coefficients for 6 temperature intervals. In this way, it is possible to determine a good approximation of the temperature coefficient curve. While the operator brings the sample solution to the temperature values requested by the device, the device determines the

temperature coefficient for each interval. This requires installation of a temperature sensor that the device can use to sense the temperature of the sample solution. The series of temperature values consists of 7 values in total:

- "Starting temperature and end temperature of the TC-curve" (see "Calibrating the temperature coefficient curve (TC-curve)", Page 63)
- Reference temp. (see chapter 13.3.1 "CR input (resistivity conductivity)", Page 89)
- 4 additional temperature values between the "starting temperature and end temperature of the TC curve"

The "end temperature of the TC-curve" be at least 20 °C higher than the "starting temperature of the TC-curve". The two values are requested at the start of the TC-curve calibration and must be entered by the user.

The reference temperature must lie between the "starting temperature and end temperature of the TC-curve" and must differ from the starting temperature and end temperature by at least 1 °C. It is set in the configuration of the CR conductivity input.

The intervals between the starting, reference-and end temperature are automatically divided into 6 intervals by the device. The remaining 4 temperatures are determined in this way.

The TC curves for the individual measuring ranges can also be edited in the configuration menu of each measuring range by means of the JUMO DSM software.

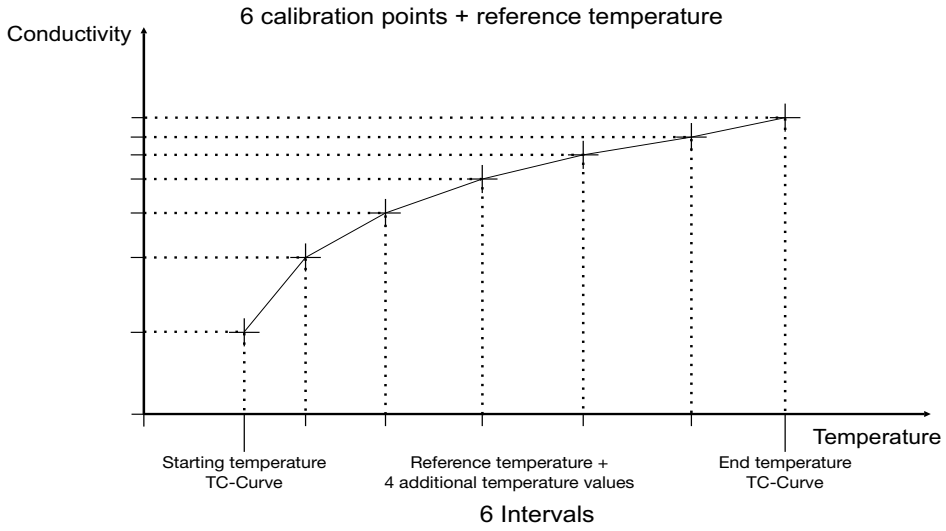

9.3 Calibration default settings

The calibration routines of the device can be enabled//locked in the calibration default settings for the "User". To do this, you must first log in on the device as "Admin".

⇨ chapter 7.2.1 "Log-on/Log-out", Page 55

In addition, the way the temperature is acquired can be set:

- **Automatic temperature acquisition:** During the calibration, the device acquires the calibration measuring points automatically by scanning past the operation or reference temperature. This is only possible when the JUMO digiLine CReither measures the temperature itself with an integrated sensor or acquires the temperature of the test solution from a master via an interface.
- **Manual temperature acquisition:** This setting can be selected if you wish to trigger acquisition of the calibration measuring points manually by pressing a key during calibration of the temperature coefficient.

9.4 Calibration of the JUMO digiLine CR with IO-Link interface

JUMO digiLine electronics can be calibrated using the JUMO DSM software on the PC in the case of device versions with an IO-Link interface or via local operation in the case of a device versions with a display. The calibration values are calculated in the JUMO digiLine electronics. The calculated calibration values and the data in the calibration logbook are saved in the JUMO digiLine electronics following successful calibration.

The procedure for calibrating with a PC is described in the operating manual of the JUMO DSM software.

9.5 Calibration via local operation in device versions with a display



CAUTION!

The conductivity measurement by the device has 4 measuring ranges.

During calibration, it is necessary to ensure that all measuring ranges used are taken into account.

▶ Calibrate all 4 measuring ranges individually. For the relative cell constant, the mode for the relative cell constant can also be set to 1 cell constant for all measuring ranges in the configuration of the conductivity input. If you select this setting, you only need to calibrate the relative cell constant once for all of the 4 measuring ranges.
⇨ chapter 13.3.1 "CR input (resistivity conductivity)", Page 89



NOTE!

To perform calibrations, you must log in on the device as a user with calibration rights. By default, the "Administrator" has calibration rights.
⇨ chapter 7.2.1 "Log-on/Log-out", Page 55

Calibrating the relative cell constant



NOTE!

Depending on the mode set for the relative cell constant in the configuration of the conductivity input, either a common relative cell constant is used for all 4 measuring ranges or a relative cell constant is determined separately for each measuring range
⇨ chapter 9.2 "Calibration methods for CR conductivity sensors (conductive)", Page 59

Procedure for calibrating the relative cell constant

1. Start calibration of the relative cell constant:

   Device menu > Calibrate > Calibration of relative cell constant

2. If in the configuration of the conductivity input the mode is set to "One CC for all MR", this step can be skipped.

   Use the "Up" and "Down" operating keys to select the measuring range to calibrate from measuring ranges 1 to 4 and confirm by pressing the "OK" operating key.

3. Make sure that the sensor has been cleaned and is immersed in the test solution.

   Wait until the measured value displayed stabilizes and then confirm the result of the measurement by pressing the "OK" operating key.

4. Use the "Up" and "Down" operating keys to set the conductivity value to the reference conductivity of your test solution and confirm the entry by pressing the "OK" operating key.

5. The device displays the relative cell constant determined. The relative cell constant is accepted if you press the "OK" operating key or discarded if you press the "Back" operating key. This completes the calibration.

Calibrating the temperature coefficient (TC)

NOTE!

In the calibration default settings, the "Temperature acquisition" item can be set for automatic acquisition of calibration values when the calibration temperatures are reached. This requires either an integrated temperature sensor or transmission of the measured temperature from a master via an interface.
⇨ chapter 9.3 "Calibration default settings", Page 61
⇨ chapter 13.3.1 "CR input (resistivity conductivity)", Page 89

Procedure for calibrating the temperature coefficient (TC)

1. Start calibration of the temperature coefficient:

   Device menu > Calibrate > Calibration of temperature coefficient

2. Use the "Up" and "Down" operating keys to select the measuring range to calibrate from measuring ranges 1 to 4 and confirm by pressing the "OK" operating key.

3. Use the "Up" and "Down" operating keys to change the displayed operation temp. to the temperature value normally encountered in the process in your system and confirm by pressing the "OK" operating key. The operation temp. must differ from the configured reference temp. by at least 6 °C (see display of allowed temperature ranges on the display). The device accepts the operation temp. only if this difference exists.

4. **with "automatic" temperature acquisition (integrated temperature sensor required)**

   The current measured values for conductivity and temperature as well as operation temp. and reference temp. are shown on the display. Bring the temperature of your sample in succession to the values of the operation temp. and reference temp. The order does not matter. Value acquisition takes place automatically.

   with "manual" temperature acquisition

   The current measured values for conductivity are shown on the display. The measured temperature value is only shown if the temperature input is activated. If the temperature input is not activated, you must measure the temperature of the sample during the calibration with the aid of a separate, appropriate temperature measuring device.

   Bring the temperature of your sample in succession to the values of the operation temp. and reference temp. The order does not matter. When each of the temperatures is reached, press the "OK" operating key to trigger value acquisition.

5. The device displays the temperature coefficient determined. The temperature coefficient is accepted if you press the "OK" operating key or discarded if you press the "Back" operating key. This completes the calibration.

Calibrating the temperature coefficient curve (TC-curve)

NOTE!

To calibrate the TC-curve, a temperature measurement must be available at the device (integrated temperature sensor or temperature from a master via an interface). Without acquisition of the temperature of the process medium sample, the TC-curve cannot be calibrated.
⇨ chapter 13.3.1 "CR input (resistivity conductivity)", Page 89

Procedure for calibrating the temperature coefficient curve (TC-curve)

1. Start calibration of the temperature coefficient curve:

   Device menu > Calibrate > Calibration of TC-curve

2. Use the "Up" and "Down" operating keys to select the measuring range to calibrate from measuring ranges 1 to 4 and confirm by pressing the "OK" operating key.

3. Use the "Up" and "Down" operating keys to change the displayed starting temperature and confirm entry of the value by pressing the "OK" operating key.

   Keep in mind that the starting and end temperature must differ by at least 20 °C.

4. Use the "Up" and "Down" operating keys to change the displayed end temperature and confirm entry of the value by pressing the "OK" operating key.

   Keep in mind that the starting and end temperature must differ by at least 20 °C.

5. The device now displays in succession the calibration points of all 7 temperature values from the starting to the end temperature. Each of the temperature values to be approached and the currently measured conductivity value are displayed. Bring the temperature of your process medium sample to the each temperature displayed. When each of the temperature values is reached, automatic value acquisition takes place for the requested temperature.

6. After successful value acquisition at all 7 calibration points, a summary of the temperature coefficients determined for the individual temperature intervals is displayed. The temperature coefficients are accepted if you press the "OK" operating key, or discarded if you press the "Back" operating key. This completes the calibration.

9 Calibration

9.6 Calibration values

General information

In the Calibration > Calibration values menu, you can view the current calibration values and also edit them manually. To enter calibration values manually, you must log in on the device as "Administrator" (see chapter 7.2.1 "Log-on/Log-out", Page 55).

Manual entry of calibration values



CAUTION!

Incorrect calibration values result in incorrect measured values!

This can disrupt proper execution of the downstream process and cause damage.

▶ Make sure that you enter the correct calibration values!

If the calibration values are known, you can enter them manually in the ***Calibration > Calibration values*** menu. This may be the case with temperature-compensated conductivity measurements, for instance, when the temperature coefficient of a liquid is known. Another important application case is the manual entry of relative cell constants of conductivity sensors. If an ASTM test certificate showing precisely measured cell constants is available, in addition to entering the nominal cell constants in the configuration of the conductivity sensor concerned (cf. chapter 13.3.1 "CR input (resistivity conductivity)", Page 89), the relative cell constants of all measuring ranges in the calibration values must be entered manually.

9.7 Calibration logbook

The calibration logbook is saved in the JUMO digiLine electronics. The last 10 successful calibrations are saved in the calibration logbook. After a connection to the digital sensor has been established successfully by the JUMO DSM software, the calibration logbook entries in the digital sensor connected to the PC are read by the JUMO DSM software and saved on the PC. There is no limit to the number of calibration logbook entries that can be saved on the PC. Canceled or failed calibrations (calibrations outside the admissible limits) are not saved in the logbook. Manual changes of calibration values are also documented. The following data are retained in the logbook:

- Date and time (only available when calibrating with the JUMO DSM software)
- Calibration values determined or entered
- Calibration mode (true calibration/manual entry of calibration values)
- Calibration assessment (assessment of the calibration values determined during the true calibration)
- Sensor replacement counter reading (to assign the calibration logbook entries to the individual sensors in the sensor replacement history of the JUMO digiLine electronics)

The calibration logbook can be viewed on the PC using the JUMO DSM software.

9.8 Evaluation criteria for calibration

Evaluation criteria for calibration of relative cell constant

Calibration value [unit]	**invalid**			**Warning**		**OK**	**Warning**				**invalid**
Relative cell constant [%]	...	<	50	≤ ...	<	75 to 125	<	...	≤	150	< ...

Evaluation criteria for calibration of temperature coefficient

Calibration value [unit]	**invalid**		**Warning**	**OK**	**Warning**	**invalid**
Temperature coefficient [%/K]	...		<	0 to 8	<	...

9 Calibration

General troubleshooting

If problems occur at an IO-Link interface during operation, check the following items:

- All plug-in and terminal connections must be made correctly and be tight. You can use a PLC together with your engineering system for a function check of communication via the interface. You can find more information on this in the documentation for your PLC and your engineering system.
- The voltage supply must meet the requirements in the IO-Link specification.

Status LED on device versions without display

The status LED indicates the operating/fault status of the device.

LED indication	Explanation
Flashing green in one-second interval	The device is in the measuring mode (no faults).
Flashing red in one-second interval	A valid temperature value and/or conductance could not be determined. Connect the device to a PC and check its operation and configuration with the aid of the JUMO DSM software.
Flashing red very quickly (5× per second)	A serious fault has occurred (data loss in device-internal data). Load the configuration into the device again with the aid of the JUMO DSM software and then switch the device off for a restart and then back on again. If the fault is still present, calibrate the device. If the fault persists, the device must be returned and repaired by JUMO Service.

10 Troubleshooting in the event of faults

11.1 General Information

Information about the device and its process/operating data is stored in the JUMO digiLINE electronics. This information can be viewed using the JUMO DSM software.

The operating data includes signals such as alarms, measured values and sensor monitoring data. The measured values can be displayed and the status of sensor operation observed using the JUMO DSM software.

11.2 Sensor data

The sensor data provides an overview of sensor characteristics and settings. No data can be edited here. All data that can be saved in the device (depending on the device version) is listed in the following.

Data point	Explanation
Manufacturer's data	
Device name	Type information as well as software and hardware version of the JUMO digiLine CR
Software version of the main processor	
Software version of the input processor	
Hardware version	
Sensor type	Article information on the sensor mounted on the JUMO digiLine electronics is entered in these fields by the manufacturer during production. The data are displayed in the JUMO DSM software.
Sensor subtype	
Manufacturers	
Customer order number	
VK job number	
Part no.	
Customer type	
Order code	
Customer item number	
Customer number	
Serial number	
Hardware address	
Date of manufacture	
Cal. status	
Sensor information	
Minimum ambient temperature	These fields hold data on the sensor type currently in use.
Maximum ambient temperature	
Minimum medium temperature	
Maximum medium temperature	
Minimum conductivity	
Maximum conductivity	
Maximum pressure at 25 °C	
Material in medium	
Material not in contact with medium	
Process connection	
Tests / approvals	
Cell constant	

Data point	Explanation
	Measuring point information
Description	Text field for a description of the measuring point. The description can be edited only with the JUMO DSM software.

11.3 Process values

Data point	Explanation
Uncomp. actual value	Electrolytic conductivity in the unit set in the configuration data and without consideration of the effect of temperature
Compensated actual value	Measured value of the electrolytic conductivity in the unit set in the configuration data and with correction for the effect of temperature
Compensation temperature interface	Temperature value received via the interface This value is used for temperature compensation when the setting "Via interface" was selected in the parameter "Compensation signal" in the configuration.
Conductivity invalid	In the event of a fault during the conductivity measurement (e. g. as the result of a measuring range violation or compensation error), this alarm is triggered. It can also be retrieved by the IO-Link master.
Temperature	**only for conductivity sensors with an integrated temperature probe:** current value measured by the integrated temperature probe
Temperature alarm signal	In the event of a fault during the temperature measurement (e. g. as the result of a measuring range violation), this alarm is triggered. It can also be retrieved by the IO-Link master.
Sensor stress	The "Sensor stress" value reflects the current level of stress on the sensor from rapidly changing temperatures and aggressive media (high conductivity values measured in the high-purity water measurement or elevated reactivity at high temperatures). The JUMO digiLineCRthe following sensor stress alarm states in the status of word of the IO-Link process data when specified limit values are reached: • Pre-alarm for sensor stress above sensor stress level 3 • Alarm for sensor stress above sensor stress level 7
Sensor stress pre-alarm state	This pre-alarm is generated at a sensor stress level greater than 3.
Sensor stress alarm state	In addition to the "Sensor stress pre-alarm", this alarm is triggered at a sensor stress level greater than 7. It can also be retrieved by the IO-Link master.
CIP counter	Number of previous CIP cycles identified as having exceeded the CIP temperature The CIP temperature is set in the configuration data. ⇨ chapter 13 "Configuration", Page 89
SIP counter	Number of previous CIP cycles identified as having exceeded the SIP temperature The SIP temperature is set in the configuration data. ⇨ chapter 13 "Configuration", Page 89
CIP/SIP pre-alarm signal	On reaching the maximum number of CIP or SIP cycles set for this pre-alarm signal, this pre-alarm is triggered. It can be retrieved by the IO-Link master. The maximum number of CIP/SIP cycles for this pre-alarm is set in the configuration data. ⇨ chapter 13 "Configuration", Page 89

Data point	Explanation
CIP/SIP alarm signal	On reaching the maximum number of CIP or SIP cycles set for this alarm signal, this alarm is triggered. It can be retrieved by the IO-Link master. The maximum number of CIP/SIP cycles for this alarm is set in the configuration data. ⇨ chapter 13 "Configuration", Page 89

11.4 Operating data

Data point	Explanation
Operating Hours Counter	The operating hours counter records the total operating time of the JUMO digiLine electronics to the second. It cannot be configured or reset.
Sensor replacement counter	The sensor replacement counter records how often sensors on the JUMO digiLineCRwere replaced. It provides a history on the PC of archived sensor information and calibration logbook entries for every sensor with which the JUMO digiLine electronics were operated. The sensor replacement counter is incremented by the JUMO DSM software. ⇨ JUMO DSM software operating manual
Initial startup date	Initial startup date
Operating hours counter reading at initial startup	Operating hours counter reading at startup on a JUMO digiLine master
Drag indicator for temperature	
Lowest temperature value	Data on the highest or lowest temperature values that occurred inside the device in the course of operation to date.
Highest temperature value	
Time of lowest temperature value	
Time of highest temperature value	
Operating hours counter reading at lowest temperature	
Operating hours counter reading at lowest temperature	
Extreme conditions[a]	
Total time below the minimum temperature	Total time violating the admissible min./max. values of temperature and electrolytic conductivity The min./max. values of temperature and electrolytic conductivity depend on the sensor used and are stored in the "Sensor information".
Total time above the maximum temperature	
Total time above the maximum conductivity value	
Number of times below the minimum temperature	Number of times above or below the admissible min./max. values of temperature and electrolytic conductivity The min./max. values of temperature and electrolytic conductivity depend on the sensor used and are stored in the "Sensor information".
Number of times above maximum temperature	
Number of times above the maximum conductivity value	

[a] only available on device versions as head transmitter

11 Data overview

11.5 Calibration data

Data point	Explanation
Rel. cell constant	The deviation from the nominal cell constant is described by the relative cell constant. It is established by the calibration.
Remaining running time on calibration timer	Elapsed time on calibration timer When this time has elapsed, the calibration alarm is triggered to signal that a calibration is due.
Calibration alarm	The calibration alarm is triggered when the time set on the calibration timer has elapsed and generates a corresponding signal on the device. On device versions with a display, the calibration alarm flashes in the header of the display.

12.1 Process data

The data is transferred in a cycle via the IO-Link interface to the IO-Link master (PDI = Process Data Input). The entire process data can be extracted via index 40 and subindex 0. The "Data format" configuration parameter can be used to select the cyclically transferred process data structure (1 or 2).

Process data input 1 (process values as TFLOAT)

Designation	Data type	Value range	Default	Description
Uncompensated conductivity process value	TFLOAT	Sensor measuring range	0	
Compensated conductivity process value	TFLOAT	Sensor measuring range	0	
Temperature process value	TFLOAT	Sensor measuring range	0	
Measuring range selection	TUINT8 (bit field)	0x00 = MR 1 0x01 = MR 2 0x02 = MR 3 0x03 = MR 4	0	
Status	TUINT16 (bit field)	Bit 0: Invalid conductivity process value Bit 1: Invalid temperature process value Bit 2: Compensation temperature range left Bit 3: Max. CIP/SIP cycles pre-alarm Bit 4: Max. CIP/SIP cycles alarm Bit 5: Sensor stress pre-alarm Bit 6: Sensor stress alarm Bit 7: Calibration timer expired Bit 8: Operating data acquisition alarm Bit 9: - Bit 10 to Bit 13: reserved Bit 14: Configuration data error Bit 15: Calibration data error or device defective	0	
Limit value switch status	TUINT8 (bit field)	Bit 0: Limit value switch 1 Bit 1: Limit value switch 2	0	

Process data input 2 (process values as TINT32)

Designation	Data type	Value range	Default	Description
Uncompensated conductivity process value	TINT32	Sensor measuring range	0	This value must be divided by 1000 to obtain the process value.
Compensated conductivity process value	TINT32	Sensor measuring range	0	
Temperature process value	TINT32	Sensor measuring range	0	This value must be divided by 10 to obtain the process value.
Measuring range selection	TUINT8 (bit field)	0x00 = MR 1 0x01 = MR 2 0x02 = MR 3 0x03 = MR 4	0	
Status	TUINT16 (bit field)	Bit 0: Invalid conductivity process value Bit 1: Invalid temperature process value Bit 2: Compensation temperature range left Bit 3: Max. CIP/SIP cycles pre-alarm Bit 4: Max. CIP/SIP cycles alarm Bit 5: Sensor stress pre-alarm Bit 6: Sensor stress alarm Bit 7: Calibration timer expired Bit 8: Operating data acquisition alarm Bit 9: - Bit 10 to Bit 13: reserved Bit 14: Configuration data error Bit 15: Calibration data error or device defective	0	
Limit value switch status	TUINT8 (bit field)	Bit 0: Limit value switch 1 Bit 1: Limit value switch 2	0	

Process data output 1 (process values as TFLOAT)

Designation	Data type	Value range	Default	Description
Measuring range selection	TUINT8	0x00 = MR 1 0x01 = MR 2 0x02 = MR 3 0x03 = MR 4	-	
Compensation temperature	TFLOAT	-	-	

Process data output 2 (process values as TINT32)

Designation	Data type	Value range	Default	Description
Measuring range selection	TUINT8	0x00 = MR 1 0x01 = MR 2 0x02 = MR 3 0x03 = MR 4	-	
Compensation temperature	TFLOAT	-	-	Compensation temperature acquired by IO-Link master for transfer to the JUMO digiLine CR This process value must be transferred after multiplication by a factor of 10.

12.2 Configuration data

The configuration is stored in the parameter manager and is transferred via the IO-Link interface in an acyclic process.

General information

Designation	Index	Subindex	Data type	Value range	Default	Access right[a]	Description
Data format	64	0	TENUM (1 byte)	0 = Floating point 1 = Integer	Floating point	RW	
Standard command	2	0	Button	0x82 = Reset to default setting	-	WO	The default data is loaded.

[a] RW = Read and write access
RO = Read access only
WO = Write access only

CR input

Designation	Index	Subindex	Data type	Value range	Default	Access right[a]	Description
Compensation source	120	0	TENUM	**TENUM values:** 0x00: Manual temperature 0x01: Temperature input 0x02: Via interface	Temperature input	RW	
Rel. cell constant mode	121	0	TENUM	**TENUM values:** 0x00: One CC for all MR 0x01: One CC for each MR	0x00	RW	
Contamination detection	122	0	TENUM	**TENUM values:** 0x00: Off 0x01: On	0x00	RW	
Cable break detection	123	0	TENUM	**TENUM values:** 0x00: Off 0x01: On	0x00	RW	
Manual temperature	124	0	TFLOAT	-50 to +250 °C	25	RW	
Reference temperature for TC/ TC-curve	125	0	TFLOAT	15 to 30 °C	25	RW	
Conductivity filter time	126	0	TFLOAT	0 to 25 s	2	RW	
Nominal cell constant	127	0	TFLOAT	0.01 to 10 cm^{-1}	1	RW	

CR input

Unit for calculation	128 to 131 for MR 1 to 4	1	TENUM	**TENUM values:** 0x00: µS/cm 0x01: mS/cm 0x02: kΩ × cm 0x03: MΩ × cm	0x01	RW	
Compensation		2	TENUM	**TENUM values:** 0x00: None 0x01: TC linear 0x02: TC-curve 0x03: nat. waters 0x04: nat. waters extended 0x05: TDS 0x06: ASTM neutral 0x07: ASTM acidic 0x08: ASTM alkaline	0x01	RW	
Temperature coefficient		3	TFLOAT	0 to 8 %/K	2.4	RW	
Offset		4	TFLOAT	-9999 to +9999	0	RW	
TDS factor		5	TFLOAT	0.01 to 2.00	0.67	RW	
Unit		6	TSTRING	up to 5 text characters	"ppm"	RW	

[a] RW = Read and write access
RO = Read access only
WO = Write access only

TC curve

Designation	Index	Subindex	Data type	Value range	Default	Access right[a]	Description
Temperature[0]	170 to 173 for MR 1 to 4	1	TFLOAT	-20 to 150 °C	0	RW	
Temperature coefficient[0]		2	TFLOAT	0 to 8	0	RW	
Temperature[1]		3	TFLOAT	-20 to 150 °C	0	RW	
Temperature coefficient[1]		4	TFLOAT	0 to 8	0	RW	
Temperature[2]		5	TFLOAT	-20 to 150 °C	0	RW	
Temperature coefficient[2]		6	TFLOAT	0 to 8	0	RW	
Temperature[3]		7	TFLOAT	-20 to 150 °C	0	RW	
Temperature coefficient[3]		8	TFLOAT	0 to 8	0	RW	
Temperature[4]		9	TFLOAT	-20 to 150 °C	0	RW	
Temperature coefficient[4]		10	TFLOAT	0 to 8	0	RW	
Temperature[5]		11	TFLOAT	-20 to 150 °C	0	RW	
Temperature coefficient[5]		12	TFLOAT	0 to 8	0	RW	

[a] RW = Read and write access
RO = Read access only
WO = Write access only

Temperature input

Designation	Index	Subindex	Data type	Value range	Default	Access right[a]	Description
Filter time constant	180	0	TFLOAT	0 to 25	2	RW	
Offset	181	0	TFLOAT	-10 to+10 °C	0	RW	
Connection type	182	0	TENUM	**TENUM values:** 0x00: 2-wire 0x01: 3-wire	0x00	RW	
Temperature input activation	183	0	TENUM	**TENUM values:** 0x00: inactive 0x01: active	0x01	RW	

[a] RW = Read and write access
RO = Read access only
WO = Write access only

Calibration timer

Designation	Index	Subindex	Data type	Value range	Default	Access right[a]	Description
Calibration interval	280	0	TUINT16	0 to 9999 d	0	RW	d = days

[a] RW = Read and write access
RO = Read access only
WO = Write access only

Sensor stress

Designation	Index	Subindex	Data type	Value range	Default	Access right[a]	Description
Alarm activation	300	0	TENUM	**TENUM values:** 0x00: inactive 0x01: active	0x00	RW	d = days

[a] RW = Read and write access
RO = Read access only
WO = Write access only

CIP/SIP cycle acquisition

Designation	Index	Subindex	Data type	Value range	Default	Access right[a]	Description
CIP temperature	320	0	TFLOAT	-20 to 150 °C	80	RW	
CIP cycle duration	321	0	TUINT16	0 to 65535 s	1800	RW	
SIP temperature	322	0	TFLOAT	-20 to 150 °C	121	RW	
SIP cycle duration	323	0	TUINT16	0 to 65535 s	1800	RW	
Alarm	324	0	TENUM	**TENUM values:** 0x00: Active 0x01: Inactive	0x01	RW	
Max. number of CIP cycles alarm	325	0	TUINT16	0 to 999	50	RW	
Max. number of SIP cycles alarm	326	0	TUINT16	0 to 999	50	RW	
Max. number of CIP cycles pre-alarm	327	0	TUINT16	0 to 999	45	RW	
Max. number of SIP cycles pre-alarm	328	0	TUINT16	0 to 999	45	RW	

[a] RW = Read and write access
RO = Read access only
WO = Write access only

Display

Designation	Index	Subindex	Data type	Value range	Default	Access right[a]	Description
Language	340	0	TENUM	**TENUM values:** 0x00: German 0x01: English 0x02: French 0x03: Spanish	0x00	RW	
Automatic logout	341	0	TINT16	0 to 15 min	0	RW	
Actual value display	342	0	TENUM	**TENUM values:** 0x00: Normal 0x01: Large display 0x02: Bargraph	0x00	RW	
Temperature Unit	343	0	TENUM	**TENUM values:** 0x00: °C 0x01: °F	0x00	RW	
Display start scaling	344 to 347 for MR 1 to 4	1	TFLOAT	0 to display end scaling	0	RW	
Display end scaling		2	TFLOAT	Display start to 9999	100	RW	
Conductivity display format		3	TENUM	**TENUM values:** 0x00: XXXX 0x01: XXX.x 0x02: XX.xx 0x03: X.xxx	0x01	RW	
Administrator password	348	0	TINT16	0 to 9999	9200	RW	
User password	349	0	TINT16	0 to 9999	300	RW	
Contrast	350	0	TUINT16	0 to 10	5	RW	
Main value signal	351	0	TENUM	**TENUM values:** 0x00: No value 0x01: Temperature input 0x02: Compensation temperature 0x03: Uncompensated conductivity 0x04: Compensated conductivity	0x04		

Display

Sig. sec. value	352	0	TENUM	**TENUM values:** 0x00: No value 0x01: Temperature input 0x02: Compensation temperature 0x03: Uncompensated conductivity 0x04: Compensated conductivity	0x01		

[a] RW = Read and write access
RO = Read access only
WO = Write access only

Calibration

Designation	Index	Subindex	Data type	Value range	Default	Access right[a]	Description
Enable calibration of relative time constant	360	0	TENUM	**TENUM values:** 0x00: Locked 0x01: Enabled	0x00	RW	
Enable calibration of temperature coefficient	361	0	TENUM	**TENUM values:** 0x00: Locked 0x01: Enabled	0x00	RW	
Enable calibration of TC-curve	362	0	TENUM	**TENUM values:** 0x00: Locked 0x01: Enabled	0x00	RW	
Temperature acquisition during calibration	363	0	TENUM	**TENUM values:** 0x00: Manual 0x01: Automatic	0x00	RW	

[a] RW = Read and write access
RO = Read access only
WO = Write access only

Switching output 1 and 2

Designation	Index	Subindex	Data type	Value range	Default	Access right[a]	Description
Output signal	200 and 201 each switching output	1	TENUM	**TENUM values:** 0x00: No value 0x01: Limit value 1 0x02: Limit value 2 0x03: Sensor fault 0x04: Calibration timer 0x05: Calibration active	Switching output 1:0x01 Switching output 2:0x02	RW	
Inversion	361	2	TENUM	**TENUM values:** 0x00: No 0x01: Yes	0x00	RW	
Output mode	362	3	TENUM	**TENUM values:** 0x00: p-switching 0x01: n-switching 0x02: push/pull	0x00	RW	
Switching operations limit value	363	4	TUINT32	0 to 99999	0	RW	0 = Limit value monitoring inactive
Limit value ON period	363	4	TUINT32	0 to 99999 s	0	RW	

[a] RW = Read and write access
RO = Read access only
WO = Write access only

Limit value switches 1 and 2

Designation	Index	Subin-dex	Data type	Value range	Default	Ac-cess right[a]	Description
Actual value	260 and 265 per limit value	1	TENUM	**TENUM values:** 0x00: Temperature 0x01: Uncomp. con-ductivity 0x02: Comp.conduct ivity	0x02		
Lock		2	TENUM	**TENUM values:** 0x00: Off 0x01: Acknowledg-ment if inactive 0x02: Acknowledgm ent always	0x00		
Startup alarm suppression mode after power on		3	TENUM	**TENUM values:** 0x00: Off 0x01: Time-limited 0x02: On	0x00		
Startup alarm suppression time after power on		4	TUINT32	0 to 99999 s	0		
Response during calibration		5	TENUM	**TENUM values:** 0x00: inactive 0x01: Active 0x02: Frozen 0x03: Standard oper-ation	0x02		

Limit value switches 1 and 2

Function	261 to 264 for MR 1 to 4 of LV 1	1	TENUM	**TENUM values:** 0x00: No function 0x01: Min. 0x02: Max. 0x03: Window 0x04: Inverse range 0x05: USP645 0x06: Cleaned water	0x00	RW	
limit value	266 to 269 for MR 1 to 4 of LVS 2	2	TFLOAT	-9999 to +9999	0	RW	
Hysteresis		3	TFLOAT	0 to 9999	0	RW	
Window range		4	TFLOAT	-9999 to +9999	0	RW	
Pre-alarm lim.		5	TFLOAT	0 to 100 %	0	RW	
Switch-on delay		6	TUINT16	0 to 9999 s	0	RW	
Switch-off delay		7	TUINT16	0 to 9999 s	0	RW	
Pulse time		8	TUINT16	0 to 9999 s	0	RW	
Response at hold		9	TENUM	**TENUM values:** 0x00: inactive 0x01: Active 0x02: Frozen	0x02	RW	
Response in case of a fault		10	TENUM	**TENUM values:** 0x00: inactive 0x01: Active 0x02: Frozen	0x01	RW	
Startup alarm suppression mode after measuring range change		11	TENUM	**TENUM values:** 0x00: Off 0x01: Time-limited 0x02: On	0x00	RW	
Startup alarm suppression time after measuring range change		12	TUINT32	0 to 99999 s	0	RW	

[a] RW = Read and write access
RO = Read access only
WO = Write access only

Events

Designation	Index	Subindex	Data type	Value range	Default	Access right[a]	Description
Event Settings	111	0	TUINT8 (bit field)	Bit 0: PD invalid Bit 1: PD overrange Bit 2: PD underrange Bit 3: Device hardware fault Bit 4: Events from application	2	RW	

[a] RW = Read and write access
RO = Read access only
WO = Write access only

12.3 Service data

The service data are written to the EEPROM cyclically (every 15 minutes).

Designation	Index	Subindex	Data type	Value range	Access right	Description
Operating Hours Counter	3000	0	TUINT32		RO	
Drag indicator temperature process value min.	3040	0	TFLOAT	-50 to +250 °C	RO	
Drag indicator temperature process value max.	3041	0	TFLOAT	-50 to +250 °C	RO	
Number of CIP cycles	3042	0	TUINT16		RO	
Number of SIP cycles	3043	0	TUINT16		RO	
Number of switch operations at switching output 1	3044	0	TUINT32		RO	
ON period of switching output 1	3045	0	TUINT32		RO	
Number of switch operations at switching output 2	3046	0	TUINT32		RO	
ON period of switching output 2	3047	0	TUINT32		RO	

12 IO-Link data

12.4 Fault signaling

IO-Link offers a range of fault signaling options (device status, event codes, PDValid-Flag). Furthermore, malfunctions can also be signaled within the process data via the process value itself or the status of the process value.

Overview

Designation	Signaling via process value in PDI[a]	Process value status in PDI (1 byte)	Device status	Event code (Standard event)	Event activation or deactication possible	Event error type
No error	-	-	0 (device is working properly)	-	-	-
Process value invalid	Yes	Bit0 (Process data invalid)	4 (failure)	0x1000 (Standard event)	Yes	Error
Overrange	No			0x8C20 (Standard event)	Yes	Error
Underrange	No				Yes	Error
Temperature input invalid	Yes	Bit1 (Process data invalid)	4 (failure)	0x1000 (Standard event)	Yes (a common switch: Application-specific events)	Error
Compensation temperature invalid	Yes	Bit2	4 (failure)	0x8C20 (Standard event)		Error
CIP/SIP cycles pre-alarm	Yes	Bit3	1 (Maintenance required)	0x8CA0 (JUMO-specific)		Warning
CIP/SIP cycles alarm	Yes	Bit4	1 (Maintenance required)	0x8CA1 (JUMO-specific)		Warning
Sensor stress pre-alarm	Yes	Bit5	1 (Maintenance required)	0x8CA2 (JUMO-specific)		Warning
Sensor stress alarm	Yes	Bit6	1 (Maintenance required)	0x8CA3 (JUMO-specific)		Warning
Calibration timer expired	Yes	Bit7	1 (Maintenance required)	0x8CA4 (JUMO-specific)		Warning
Operating data acquisition alarm	Yes	Bit8	2 (Outside the specification)	0x8CA5 (JUMO-specific)		Warning
Error in configuration data	No	Bit14 (Parameter error)	4 (failure)	0x6320 (Standard event)	No	Error
Error in calibration data	Yes	Bit15 (Device is defective)	4 (failure)	0x5000 (Standard event)	Yes	Error
Device is defective (Probe break, probe short circuit)	No					

Undervoltage	No	-	2 (Outside the specification)	0x5111 (Standard event)	No	Warning

[a] PDI = Process Data Input

Device status and event codes

Various events can be activated or deactivated via configuration parameters.

PD-Valid Flag

If the device status is 4 (failure), the PDValid-Flag is set to zero (false). This means that all of the process data is invalid. In order to determine the precise cause, the process value or status bits can be evaluated.

Process value status

⇨ See chapter 12.1 "Process data", Page 73

12 IO-Link data

13.1 General Information

Device versions of the JUMO digiLineCR with a display can be configured directly on the device using the operating keys and the display. To change configuration settings, you must log on to the device as "Administrator" beforehand (see chapter 7.2.1 "Log-on/Log-out", Page 55).

In addition, JUMO digiLine electronics in device versions with an IO-Link interface can also be configured using the engineering system for your automation device, or on a PC using the JUMO DSM software. You can find more information on this in the documentation for your engineering system or in the operating manual for the JUMO DSM software.

The tables in this chapter explain all of the configuration parameters of the JUMO digiLine electronics.

13.2 Important information



CAUTION!

Incorrect configurations can cause sensor malfunctions.

The consequence may be erroneous measured values.

▶ Prior to startup, check all information in the configuration.

13.3 Input

13.3.1 CR input (resistivity conductivity)

Configuration item	Selection/setting option	Explanation
Compensation temperature	Manual temperature via temperature input interface	Selects the source for the compensation temperature **Manual temperature:** Compensation using a fixed temperature value entered in the "Manual temperature" configuration item. **Via interface:** Compensation temperature is transferred by master. **Temperature input:** The integrated temperature probe of the sensor supplies the compensation temperature.
Manual temperature	-50 to +250 °C	Constant compensation temperature value If the **"Compensation temperature"** configuration item is set to **"Manual temperature"**, this value is used for temperature compensation of the measured conductivity value.
Reference temperature for linear TC	15 to 30 °C	**required only for conductivity measurement with "TC linear", "TC-curve" and TDS temperature compensation:** The temperature at which the conductivity value displayed was set
Wire break detection	Off On	A sensor alarm is activated in the event of a sensor wire break when this function is activated.
Filter time const.	0.0 to 25.0 s	Optimization of measured value updating The larger the value of the filter time constant, the slower is the change in measured value at the output.
Rel. cell constant mode	One CC for all MR One CC for each MR	This parameter can be used to specify whether one relative cell constant should be used for all 4 measuring ranges, or whether each measuring range should have its own cell constant and that is used for the measured value calculation. ⇨ "Calibrating the relative cell constant", Page 61

Configuration item	Selection/setting option	Explanation
Nominal cell constant	0.01 to 10 cm^{-1}	**only for device versions with a separate sensor** nominal cell constant of the conductivity sensor (can be read from the sensor nameplate) If an ASTM test certificate showing precisely measured cell constants is available, in addition to entering the nominal cell constants in the configuration the relative cell constants in the calibration values must be entered manually (cf. chapter 9.6 "Calibration values", Page 64).

13.3.2 Measuring ranges 1 to 4 for the CR input

Measuring range selection

On device versions with an IO-Link interface, the individual measuring ranges are activated by the IO-Link master (PLC). The IO-Link master must be programmed appropriately by the user.

Configuration data for measuring ranges 1 to 4

Configuration item	Selection/setting option	Explanation
Compensation	None, TC linear, TC curve, natural waters, natural waters with expanded temperature range, TDS ASTM neutral, ASTM acidic, ASTM alkaline	Type of temperature compensation
Temperature coefficient	0.0 to 8.0 %/K	**applicable only to "TC linear" and "TDS" compensation** The temperature coefficient is a measure of the temperature dependence of the electrolytic conductivity of a liquid. It is used to compensate for the effect of temperature when measuring the electrolytic conductivity. If it is known, the temperature coefficient can be entered here or, if it is not yet known, determined by the calibration. ⇨ chapter 9.2 "Calibration methods for CR conductivity sensors (conductive)", Page 59

Configuration item	Selection/setting option	Explanation
Unit (for calculation)[a]	µS/cm mS/cm **only without TDS:** kΩ×cm MΩ×cm	Unit in which the electrolytic conductivity is displayed when the parameter "Compensation" is set to "TDS" and/or the customer-specific linearization is active, the unit text set in the parameter "Unit" appears in the measured-value display instead of the unit for the electrolytic conductivity. The electrolytic conductivity in µS/cm or mS/cm multiplied by the TDS factor (see below in this table) yields the TDS measured value. The unit for the electrolytic conductivity is selected in the parameter "Unit for calculation" as the basis for the TDS calculation. Because of the text length, the parameter "Unit for calculation" appears only as "Unit" in the configuration of the device.
Unit[a]	up to 5 text characters	**only for TDS compensation or customer-specific linearization** Unit for the process variable to be displayed for TDS measurements or when using customer-specific linearization (e.g. ppm or mg/l) The unit must be edited with the JUMO DSM software. It is not possible to change texts on the unit.
Temperature coefficient		
Offset	-9999 to +9999	Correction value added to measured value
TDS factor	0.01 to 2.00	**only for TDS compensation:** Conversion factor from measured conductivity to display unit (see configuration item "Unit" in this table) for TDS compensation, see configuration item "Compensation" in this table

[a] Because of the text length, the parameter "Unit for calculation" appears only as "Unit" in the configuration menu of the device. The parameter "Unit" can only be set with the JUMO DSM software and is not listed in the configuration menu.

13.3.3 Temperature input

Configuration item	Selection/setting option	Explanation
Temperature input function	active inactive	**only device versions with a separate sensor:** Activation of the temperature input
Filter time const.	0.0 to 25.0 s	Optimization of measured value updating The larger the value of the filter time constant, the slower is the change in measured value at the output.
Offset	-10 to+10 °C	Correction value added to measured value
Connection type	2-wire 3-wire	**only for device versions with a separate sensor** Connection variants for the connected resistance thermometer

13 Configuration

13.4 IO-Link interface

13.4.1 SIO mode (switching outputs)

Configuration item	Selection/setting option	Explanation
output signal	Limit value 1 Limit value 2 Sensor fault Calibration timer Calibration active	Digital signal source for the output
Inversion	Yes No	Switching status inverted or not inverted
Output mode	p-switching n-switching Push/Pull	Output driver mode in the SIO mode In the SIO mode, the IO-Link output allows the circuit variants PNP (p-switching), NPN (n-switching) and Push/Pull. The output driver must be set to the desired mode using this configuration item.
Switching operations limit value	0 to 99999 ×1000	The switching operations of the binary outputs are counted in the device. When the limit value is reached, a service message is shown **on device versions with a display**. Setting 0 = Limit value monitoring inactive
Limit value ON period	0 to 99999 h	The total ON period of the binary outputs is counted in the device. When the limit value is reached, a service message is shown **on device versions with a display**. Setting 0 = Limit value monitoring inactive

13.5 CIP/SIP

NOTE!

Sensor monitoring requires plant-specific empirical values for the sensor stress caused by process conditions. Configure the sensor monitoring parameters on the basis of these empirical values.

CIP/SIP

Configuration item	Selection/setting option	Explanation
Minimum CIP temperature	-20 to+150 °C	Temperature thresholds for identifying CIP/SIP cycles If the CIP/SIP cycle takes place above one of these values for the set duration of a CIP/SIP cycle, the values identify a successfully completed CIP/SIP cycle and the CIP or SIP counter is incremented. The respective counter is reset only after the value has dropped below the CIP/SIP temperature.
Minimum SIP temperature		
CIP cycle duration	0 to 65535 s	Duration of a CIP/SIP cycle
SIP cycle duration		
CIP/SIP alarming	Inactive Active	Activates/deactivates the CIP/SIP alarm on reaching the maximum number of CIP/SIP cycles

Configuration item	Selection/setting option	Explanation
Alarm limit value CIP cycles	0 to 999	Specifies the number of CIP/SIP cycles at which the CIP/SIP alarm and pre-alarm are triggered[a]
Alarm limit value SIP cycles		
Pre-alarm limit value CIP cycles		
Pre-alarm limit value SIP cycles		

[a] The counters for CIP and SIP cycles are automatically incremented by the JUMO digiLine electronics each time a CIP or SIP process is recognized on the basis of the configured CIP/SIP temperatures and duration of the CIP/SIP cycle.

13 Configuration

13.6 Calibration timer

Calibration timer

Configuration item	Selection/setting option	Explanation
Calibration interval	0 to 9999 days	Time from one calibration to the next. The time at which a calibration is due is indicated by the calibration alarm on device versions with a display. In addition, the calibration alarm from the IO-Link master can be read and processed in the status word of the process data (see chapter 12.1 "Process data", Page 73).

13.7 Sensor stress

Configuration item	Selection/setting option	Explanation
Sensor stress	Inactive Active	Activates/deactivates the sensor stress alarm The "Sensor stress" value reflects the current level of stress on the sensor from high temperatures and high conductivity values. The following sensor stress alarm states are signaled on the device display (only on device versions with a display) on reaching the specified limit values: • Pre-alarm for sensor stress above sensor stress level 3 • Alarm for sensor stress above sensor stress level 7

13.8 Display

General information

Configuration item	Selection/setting option	Explanation
Language	German English French Spanish	Selects the operating language for the JUMO digiLine CR As an alternative to manual configuration, the language setting can also be accessed by pressing the "OK" operating key for a longer period of time (see "Language selections on device versions with display", Page 57).
Automatic logoff time	0 to 15 min.	The automatic logoff time can be set here. The logged-in user is logged off as soon as no key has been pressed on the device during the set time. If the automatic logoff time is set to the value 0 s, then automatic logoff is inactive. The user then remains logged in until he logs off again or the device is restarted. ⇨ chapter 7.2.1 "Log-on/Log-out", Page 55

Configuration item	Selection/setting option	Explanation
Display type	Standard display Large display Bargraph	In the normal and large display, 2 values are shown on the display in the measuring mode (main and secondary value). In the bargraph display, the main value is shown as a numerical value at the center in the measuring mode and visualized underneath as a bargraph display. In contrast to the normal and large display, the secondary value is not shown in this case. The value range of the main value for the bargraph can be set (see next table). The compensated conductivity is the main value and the temperature is the secondary value in the default setting. However, this setting can also be changed to meet your requirements (see further below in this table).
Temperature Unit	°C °F	Temperature unit setting for the device
Sign. main value	No signal Temperature input Compensation temp. Uncomp. conductivity Compens. Conductivity	Signal source for the main value display In the measuring mode, the main value is shown on the display as the central value (upper display value). The appearance of the display can be set in the display type (higher up in this table).
Sig. sec. value	No signal Temperature input Compensation temp. Uncomp. conductivity Compens. Conductivity	Signal source for the secondary value display In the measuring mode, the secondary value is shown on the display as an additional value accompanying the main value (below the main value). The appearance of the display can be set in the display type (higher up in this table).

Measuring ranges 1 to 4

Configuration item	Selection/setting option	Explanation
Bargraph start	0 to < bargraph end	Measured value of the main value at the start of the bargraph display
Bargraph end	> bargraph start up to 9999	Measured value of the main value at the end of the bargraph display
Comma format	XXXX XXX.x XX.xx X.xxx	Number of desired decimal places The number of decimal places can be set from 0 to 3.

13 Configuration

14.1 Cleaning

The front of devices with plastic housings (front foil) can be cleaned with standard detergents, rinsing and cleaning agents.



CAUTION!

The front of devices with plastic housings is not resistant to aggressive acids and lyes or scouring agents.

Use of these media can cause damage to devices with plastic housing.

▶ Only clean the front of devices with plastic housing with suitable agents.

14.2 Sensor replacement on device versions with a separate sensor



NOTE!

Sensor replacement is not possible on JUMO digiLine electronics in device versions as a head transmitter. Here, replacement of the entire module with sensor and electronics is required.

Replacement of the sensor with retention of the JUMO digiLine electronics

On device versions with a separate sensor, the sensor can be disconnected from the JUMO digiLine electronics. If the sensor needs to be replaced, the JUMO digiLine electronics can be connected to a new sensor and re-inserted. The "Sensor replacement function" must be used in this case to reset the corresponding data in the JUMO digiLine electronics and increment the "sensor counter".

⇨ JUMO DSM software operating manual

14 Operation, maintenance and care

15.1 IO-Link interface

Communication interface	IO-Link device V 1.1 (downward compatible to V 1.0)
Communication mode (data transfer rate)	COM 3 (230.4 kBaud)
IO Device Description (IODD)	The IODD can be localized and downloaded on the JUMO website in the product area for this device or at www.io-link.com with the "IODDfinder".
Max. line length acc. to IO-Link standard	20 m
Output mode	
Switching output type	Transistor switching output can be configured as NPN, PNP, or Push/Pull
Short-circuit proof	Yes (clocked)
Resistant to overload	Yes
Protected against polarity reversal	Yes
Ampacity of the switching outputs	100 mA in each case
Voltage drop of the switching outputs	Max. 2 V in each case

15.2 Analog inputs (sensor connection side)

Input for temperature sensor

Measuring range	
Pt100	-50 to +250 °C
Pt1000	-50 to +250 °C
Connection types	2-wire/3-wire
Measuring accuracy	±0.25 % of MR[a]
Ambient temperature influence	0.1 % / 10 K
Sampling rate	500 ms

[a] MR: measuring range span

Input for CR conductivity sensor

Units	µS/cm mS/cm kΩ × cm MΩ × cm
Display ranges[a]	0.000 to 9.999 00.00 to 99.99 000.0 to 999.9 0000 to 9999
Temperature compensation	TK linear[b] for -50 to +250 °C and over 0,045 µS/cm TC curve[b] for -20 to +150 °C and over 0.055 µS/cm TDS[c] for -50 to +250 °C Natural water DIN EN 27888 for 0 to 36 °C Natural water with expanded range for 0 to 100 °C ASTM D1125-95 neutral impurities for 0 to 100 °C and over 0.045 µS/cm ASTM D1125-95 alkali and acid impurities for 0 to 100 °C and over 0.055 µS/cm

15 Technical data

Measuring accuracy	
0 to 20 µS	±(0.5 % of the MRE[d] + 0.3 µS) × cell constant
0 to 100 µS	±(0.6 % of the MRE[d] + 0.3 µS) × cell constant
0 to 1000 µS	±(0.6 % of the MRE[d] + 0.3 µS) × cell constant
0 to 10 mS	±(0.6 % of the MRE[d] + 0.3 µS) × cell constant
0 to 100 mS	±(0.6 % of the MRE[d] + 0.3 µS) × cell constant
0 to 1000 mS	±1 % of MRE[d]
Cell constant	0.01 to 10 cm^{-1}
Measuring range selection	4 configurable measuring ranges
Ambient temperature influence	0.2 % / 10 K
Sampling rate	500 ms

[a] The measuring/display range is scalable. The decimal place is user configurable.

[b] TC: temperature coefficient

[c] TDS (**T**otal **D**issolved **S**olids)

[d] MRE: Measuring range end value

15.3 Electrical data

Device versions with IO-Link

Voltage supply[ab]	DC 24 V ±25 %
Power/current consumption	< 7,5 W
Electromagnetic compatibility (EMC)	
for all device versions	DIN EN 61326-1
for head transmitters only	DIN EN 61326-2-3
Interference emission	Class B[c]
Interference immunity	Industrial requirements
Protection rating	Protection rating III

[a] The voltage supply for the JUMO digiLine electronics must be provided with SELV or PELV and must meet the requirements for energy-limited electrical circuits to DIN EN 61010-1.

[b] The power supply current must be limited to 2 A. If the voltage supply allows higher current consumption, a fuse must be provided.

[c] The product is suitable for industrial use as well as for households and small businesses.

15.4 Case

Plastic housing material	Plastic (ABS)
Stainless steel case material	1.4301
Protection type	IP66, IP67, IP69K
Operating position	any, with due consideration for the viewing angle of the display

15.5 Environmental influences

15.5.1 Device version as head transmitter

Ambient temperature	-20 to +60 °C
Storage temperature	-25 to +80 °C
Site altitude	Max. 2000 m (6562 ft) above sea level
Shock resistance Acceleration Dur.	DIN EN 60654-3 40 m/s^2 Duration 5 ms
Vibration resistance for device versions with **plastic housing** Frequency range Amplitude Acceleration	IEC 61298-3 10 to 1000 Hz 0.35 mm 50 m/s^2
Vibration resistance for device versions with **stainless steel case** Frequency range Amplitude Acceleration	IEC 61298-3 10 to 1000 Hz 0.15 mm 20 m/s^2
Resistance to climatic conditions	Climate class 4K4H to EN 60721-3-4 Relative humidity ≤ 100 % condensing

15.5.2 Device version with separate sensor

Ambient temperature	-20 to +60 °C
Storage temperature	-25 to +80 °C
Site altitude	Max. 2000 m (6562 ft) above sea level
Shock resistance Acceleration Dur.	DIN EN 60654-3 40 m/s^2 Duration 5 ms
Vibration resistance Frequency range Amplitude Acceleration	IEC 61298-3 10 to 150 Hz 0.75 mm 2 m/s^2
Resistance to climatic conditions	Climate class 4K4H to EN 60721-3-4 Relative humidity ≤ 100 % condensing

15 Technical data

15.6 Approvals

15.6.1 Head transmitter (202763...)

GOST	
Test facility	-
Certificate/test no.	Approval submitted
Inspection basis	IEC 60079-0, IEC 60079-1
Valid for	-
EAC	
Test facility	RU
Certificate/test no.	Approval submitted
Inspection basis	IEC 60079-0, IEC 60079-1
Valid for	-

15.6.2 Devices for separate sensors (202762)

c UL us	
Test facility	Underwriters Laboratories
Certificate/test no.	E201387
Inspection basis	UL 61010-1 (3rd Edition), CAN/CSA-C22.2 No. 61010-1-12 (3rd Edition)
Valid for	All versions with plastic housing
GOST	
Test facility	-
Certificate/test no.	Approval submitted
Inspection basis	IEC 60079-0, IEC 60079-1
Valid for	-
EAC	
Test facility	RU
Certificate/test no.	Approval submitted
Inspection basis	IEC 60079-0, IEC 60079-1
Valid for	-

15.7 Sensor properties in head transmitters

The technical data for each of the sensors for the individual device versions, which are combined with the head transmitter, must be obtained from their data sheets. The relevant sensor types for the individual device versions of the JUMO digiLine CR can be obtained from the following table.

JUMO digiLine CR device versions	Sensor data sheet
202763	202922
202764	202923
202765	202924 (data for sensor 202924/10 are relevant)
202766	202924 (data for sensor 202924/20 are relevant)
202767	202924 (data for sensors 202924/30 and 202924/31 are relevant)
202768	202925
202769	202930
202781	202928



CAUTION!

In the case of head transmitters, heat emitted from the system can exceed the admissible ambient temperature of the head transmitter.

Make sure that the head transmitter used is operated within the limits of its technical data.

▶ Observe the specifications on the data sheet! It may be necessary to select a device version with a separate sensor and mount the transmitter at an adequate distance from the heat source.

15 Technical data

16.1 China RoHS

	JUMO More than sensors + automation				
产品组别 Product group: 202760 – 202769	产品中有害物质的名称及含量 China EEP Hazardous Substances Information				
部件名称 Component Name					
	铅 (Pb)	汞 (Hg)	镉 (Cd)	六价铬 (Cr(VI))	多溴联苯 (PBB)	多溴二苯醚 (PBDE)
外壳 Housing (Gehäuse)	X	○	○	○	○	○
过程连接 Process connection (Prozessanschluss)	○	○	○	○	○	○
螺母 Nuts (Mutter)	○	○	○	○	○	○
螺栓 Screw (Schraube)	○	○	○	○	○	○

本表格依据SJ/T 11364的规定编制。
This table is prepared in accordance with the provisions SJ/T 11364.
○：表示该有害物质在该部件所有均质材料中的含量均在GB/T 26572规定的限量要求以下。
Indicate the hazardous substances in all homogeneous materials' for the part is below the limit of the GB/T 26572.

×：表示该有害物质至少在该部件的某一均质材料中的含量超出GB/T 26572规定的限量要求。
Indicate the hazardous substances in at least one homogeneous materials' of the part is exceeded the limit of the GB/T 26572.

16 Annex

JUMO GmbH & Co. KG
Street address:
Moritz-Juchheim-Straße 1
36039 Fulda, Germany
Delivery address:
Mackenrodtstraße 14
36039 Fulda, Germany
Postal address:
36035 Fulda, Germany
Phone: +49 661 6003-0
Fax: +49 661 6003-607
Email: mail@jumo.net
Internet: www.jumo.net

JUMO UK LTD
JUMO House
Temple Bank, Riverway
Harlow, Essex, CM20 2DY, UK
Phone: +44 1279 63 55 33
Fax: +44 1279 62 50 29
Email: sales@jumo.co.uk
Internet: www.jumo.co.uk

JUMO Process Control, Inc.
6724 Joy Road
East Syracuse, NY 13057, USA
Phone: +1 315 437 5866
Fax: +1 315 437 5860
Email: info.us@jumo.net
Internet: www.jumousa.com