JUMO digiLine CR

Transmitter with analog or binary outputs for connection of conductive conductivity sensors in automation systems



Operating Manual

20276320T90Z001K000

V2.00/EN/00691330/2024-02-20

Table of contents

1 Safety information 7

1.1 Safety signs 7
1.1.1 Warning symbols 7
1.1.2 Note symbols 7
1.2 Intended use 8
1.3 Qualification of personnel 8

2 Acceptance of goods, storage, and transport 9

2.1 Checking the delivery 9
2.2 Important information about storage and transport 9
2.3 Returning goods 9
2.3.1 Accompanying letter for repair 9
2.3.2 Decontamination Statement 9
2.3.3 Protection against electrostatic discharge 10
2.4 Disposal 10

3 Device Description 11

3.1 Introduction 11
3.2 Block diagram 12
3.3 Device setup 13
3.4 Description 16

4 Identifying the device version 19

4.1 Order details 19
4.1.1 Head transmitter (202763...) 19
4.1.2 Devices for separate sensors (202762) 31
4.2 Accessories 32

5 Mounting 33

5.1 Mounting site and climatic conditions 33
5.2 Dimensions of device versions with separate sensor 33
5.2.1 Device versions with plastic housing 33
5.2.2 Device versions with stainless steel case 35
5.3 Dimensions of head transmitter 37
5.4 Mounting devices with a separate sensor 44
5.4.1 JUMO digiLine CR with plastic housing 44
5.4.2 JUMO digiLine CR with stainless steel case 46
5.5 Mounting of head transmitters 47

Table of contents

6 Electrical connection 49

6.1 Installation notes 49
6.2 Connection diagram 49
6.2.1 Functional ground connection for device versions with stainless steel case 52
6.2.2 Galvanic isolation 53
6.2.3 Connection examples 54

7 Operation 57

7.1 General Information 57
7.2 Device menu 58
7.2.1 Log-on/Log-out 59
7.2.2 User level 59
7.2.3 Calibration 60
7.2.4 Device information 60
7.2.5 Service 60

8 Startup 63

8.1 Functional test 63

9 Calibration 65

9.1 General information 65
9.2 Calibration methods for CR conductivity sensors (conductive) 65
9.3 Calibration default settings 67
9.4 Calibrating the JUMO digiLine CR with analog/binary outputs 68
9.5 Calibration via local operation in device versions with a display 68
9.6 Calibration values 70
9.7 Calibration logbook 70
9.8 Evaluation criteria for calibration 71

10 Troubleshooting in the event of faults 73

11 Data overview 75

11.1 General Information 75
11.2 Sensor data 75
11.3 Process values 76
11.4 Operating data 78
11.5 Calibration data 79

Table of contents

12 Configuration 81

12.1 General Information 81
12.2 Important information 81
12.3 Input 81
12.3.1 CR input (resistivity conductivity) 81
12.3.2 Measuring ranges 1 to 2 for the CR input 83
12.3.3 Temperature input 84
12.3.4 Binary inputs 1 and 2 85
12.4 Binary outputs 85
12.5 Analog outputs 85
12.6 CIP/SIP 87
12.7 Limit value monitoring function 88
12.8 Calibration timer 91
12.9 Sensor stress 92
12.10 Alarm buzzer (only on device version with binary outputs) 92
12.11 Display 92

13 Operation, maintenance and care 95

13.1 Cleaning 95
13.2 Sensor replacement on device versions with a separate sensor 95

14 Technical data 97

14.1 Analog outputs 4 to 20 mA 97
14.2 Binary outputs 97
14.3 Analog inputs (sensor connection) 97
14.4 Binary inputs 98
14.5 Electrical data 99
14.6 Case 99
14.7 Environmental influences 99
14.7.1 Device version as head transmitter 99
14.7.2 Device version with separate sensor 100
14.8 Approvals 100
14.8.1 Head transmitter (202763...) 100
14.8.2 Devices for separate sensors (202762) 101
14.9 Sensor properties in head transmitters 101

15 Annex 103

15.1 China RoHS 103

Table of contents

1.1 Safety signs

1.1.1 Warning symbols



DANGER!

This symbol indicates that **personal injury from electrocution** may occur if the appropriate precautionary measures are not taken.



WARNING!

This symbol in connection with the signal word indicates that **personal injury** may occur if the respective precautionary measures are not carried out.



CAUTION!

This symbol in connection with the signal word indicates that **material damage or data loss** will occur if the respective precautionary measures are not taken.



CAUTION!

This symbol indicates that **components could be destroyed** by electrostatic discharge (ESD = Electro Static Discharge) if the respective cautionary measures are not taken.

Only use the ESD packages intended for this purpose to return device inserts, assembly groups, or assembly components.



READ THE DOCUMENTATION!

This symbol, which is attached to the device, indicates that the associated **documentation for the device** must be **observed**. This is necessary to identify the nature of the potential hazard, and to take measures to prevent it.

1.1.2 Note symbols



NOTE!

This symbol refers to **important information** about the product, its handling, or additional benefits.



REFERENCE!

This symbol refers to **additional information** in other sections, chapters, or other manuals.



FURTHER INFORMATION!

This symbol is used in tables and indicates that **further information** is provided after the table.



DISPOSAL!

At the end of its service life, the device and any batteries present do not belong in the trash! Please ensure that they are **disposed of** properly and in an **environmentally friendly** manner.

1 Safety information

1.2 Intended use

The device described in these instructions is used to measure analytical process variables in liquids in an industrial environment as specified in the technical data. Other uses beyond those defined are not viewed as intended uses.

The device is built according to the relevant standards and directives as well as to the applicable safety regulations. Nevertheless, improper use, incorrect installation or configuration can result is erroneous measurements. Depending on the plant, this may cause unwanted control actions (e. g. overmetering) in the plant. Personal injury and property damage must be prevent through appropriate safety measures and safety devices provided by the customer.

To avoid danger, only use the device:

- for the intended use
- when in good order and condition
- In compliance with these instructions



WARNING!

Error during installation, mounting, or configuration of JUMO sensors with digiLine electronics can disrupt proper execution of the downstream process or cause damage.

▶ For this reason, it is always necessary to provide safety devices that are independent of the device and to allow settings to be made only by technical personnel.



CAUTION!

JUMO sensors with digiLine electronics must be calibrated correctly to prevent measurement errors.

1.3 Qualification of personnel

This manual contains the necessary information for the intended use of the device described therein.

It is intended for technically qualified personnel who have received special training or have the appropriate knowledge in the field of automation technology (measuring and control technology).

Understanding and technically correct observance of the safety instructions and warnings contained in this manual are prerequisites for safe mounting, installation, and startup as well as safety during operation of the described device. Only qualified individuals have the required technical knowledge to interpret and put into practice the safety instructions and warnings used in this manual in any given situation.

2 Acceptance of goods, storage, and transport

2.1 Checking the delivery

- On delivery, ensure that the packaging and its contents are undamaged.
- Check the delivery for completeness against the packing slip and order confirmation.

Proceed as follows if external transport damage is visible:

- Do not accept the delivery or only conditionally.
- Note the extent of damage on the transport documents or on the delivery note of the freight forwarder.
- File a complaint.

2.2 Important information about storage and transport

- Store the device in a dry, clean environment. Observe the admissible environmental influences (see chapter 14 "Technical data", Page 97).
- Protect the device from shock during transport. The original packaging offers optimal protection.

2.3 Returning goods

If repairs are needed, return the device in clean condition and in its entirety.

Use the original packaging when returning the device.

2.3.1 Accompanying letter for repair

Please include the completed accompanying letter for repair when returning goods. Do not forget to state the following:

- Description of the application
- Description of the error that has occurred

The letter of transmittal accompanying product returns can be downloaded on the Internet at www.jumo.de under Services > Repair service.

2.3.2 Decontamination Statement

As a certified company and in compliance with legal requirements, JUMO is required to handle all incoming products that come into contact with liquids in compliance with statutory regulations.

Before returning a device for repair or calibration:

- Remove all adhering residues of the substance measured.
  Pay special attention to grooves for seals and cracks where residues of the material being measured may adhere. This is especially important when the material being measured is a hazardous substance.

A returned device can only be accepted if the information regarding protection against contamination has been completed correctly on the letter of transmittal accompanying the product returned. If the device has come into contact with hazardous substances, state this and attach the appropriate safety data sheets to the letter of transmittal.

2.3.3 Protection against electrostatic discharge

(ESD = **e**lectro **s**tatic **d**ischarge)

To prevent damage from ESD, electronic assemblies, or components with a high internal resistance must be handled, packaged, and stored in an environment that protects against ESD. Measures that protect against electrostatic discharge and electric fields are described in DIN EN 61 340-5-1 and DIN EN 61 340-5-2 "Electrostatics – Part 5-2 – Protection of electronic devices from electrostatic phenomena".

If you are returning electronic assemblies or components for repair:

- Pack sensitive components only in an environment providing protection against ESD. Workspaces such as this divert electrostatic charges to ground in a controlled manner and prevent static charges due to friction.
- Use only packaging intended specifically for ESD-sensitive assemblies/components. These must consist of conductive plastics.

Keep in mind that the manufacturer assumes no liability for damage caused by ESD.



CAUTION!

Electrostatic charges occur in non-ESD-protected environments.

Electrostatic discharges can damage modules or components.

▶ For transport purposes, use only the ESD packaging provided.

2.4 Disposal



- Do not dispose of the device or replaced parts in the trash after use.
- Delete programs and data stored on the device.
- Remove batteries, if any, if this can be done without damaging the device.
- Dispose of the device and the packaging material in a responsible and environmentally friendly manner.
- Observe the country-specific laws and regulations for waste treatment and disposal.

In accordance with Directive 2012/19/EU on Waste from Electrical and Electronic Equipment, manufacturers are obliged to offer the option of returning waste equipment. Request the return from the manufacturer.

3.1 Introduction

General

The JUMO digiLine CR has an 8-pole M12 plug connector for electrical connection to your system in both of its versions (analog or binary outputs). In the analog device version, 2 standard signals (4 to 20 mA) for the measured temperature and conductivity values are transmitted via this interface. The device version with binary outputs has instead two solid-state relay outputs for switching functions based on the temperature and conductivity values measured by the JUMO digiLine CR. The binary device versions are suitable for switching control of system controls and equipment without their own measurement and control technology (e.g. dosing pumps or relay/contactor-based control systems). Threshold values can be set in the JUMO digiLine electronics.

Installation and connection

The JUMO digiLine CR with analog or binary outputs is available in two versions in terms of design type:

- **Device version as head transmitter:** JUMO digiLine electronics and sensor form an integrated module. The module is installed in a suitable fitting.
- **Device version with separate sensor:** JUMO digiLine electronics and sensor are separate modules and are connected to one another by a cable. The sensor is installed in a suitable fitting. The JUMO digiLine electronics are mounted in the vicinity of the sensor using the supplied wall/pipe/DIN rail holder.

If it becomes necessary to replace the sensor due to a defect or wear, in the device versions with a separate sensor, the JUMO digiLine electronic components can be disconnected from the sensor and the intact components reused. In the device version as head transmitter, disconnecting the sensor from the JUMO digiLine electronics is not possible. For connection to the analog or binary signal interface on your system, 8-pole M12 cable sockets are available from JUMO for on-site configuration.

Configuration, parameterization and calibration

The JUMO digiLine CR with analog or binary outputs, is configured and parameterized from a PC using the JUMO DSM software (**D**igital **S**ensor **M**anagement software). It is only necessary to connect the device to the PC via its USB interface.

3 Device Description

3.2 Block diagram

JUMO digiLine CR with analog outputs

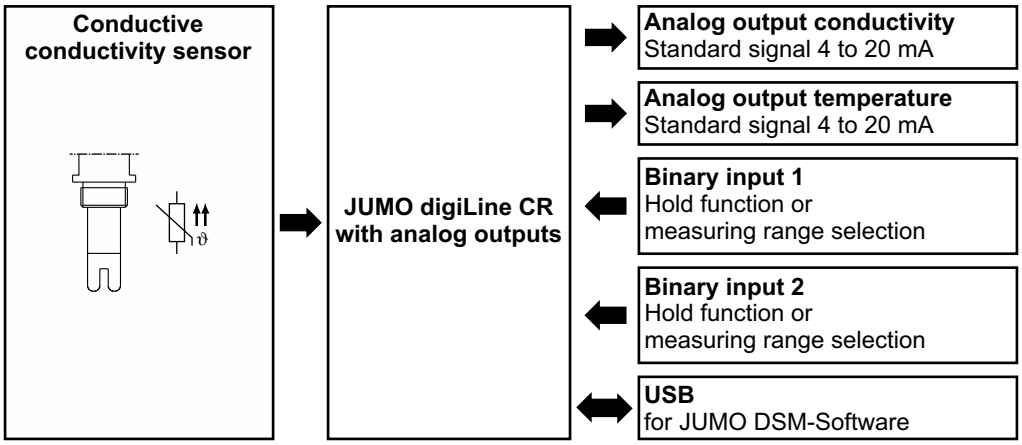

JUMO digiLine CR with binary outputs

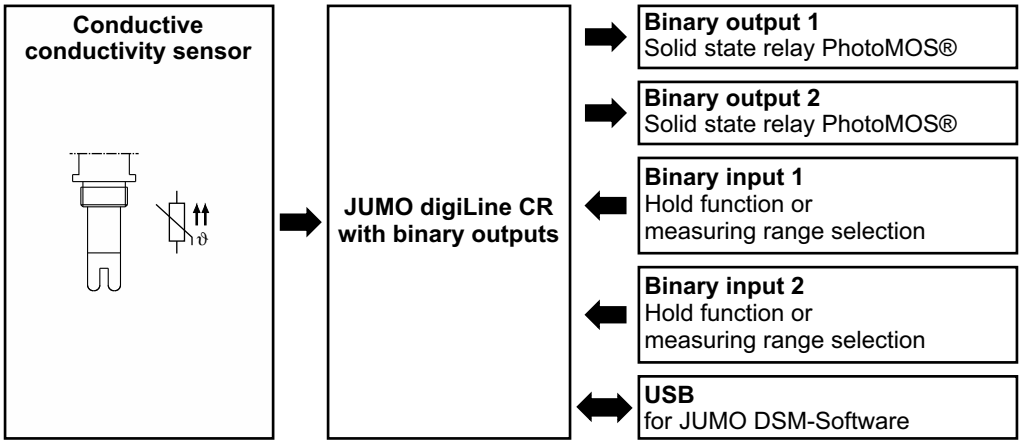

3.3 Device setup

JUMO digiLine electronic components with plastic housing for separate CR sensors

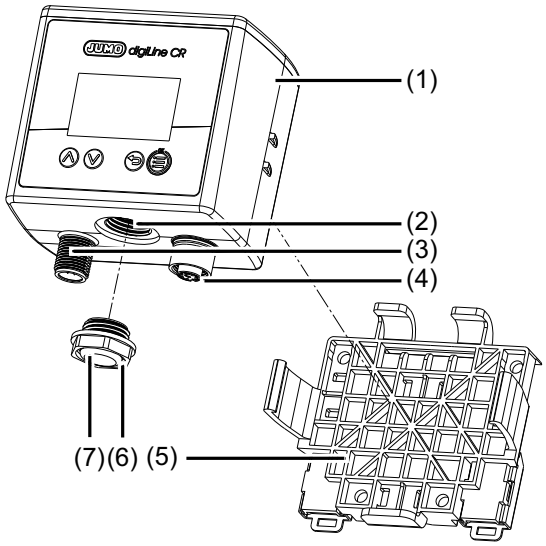

1) JUMO digiLine electronics for CR sensors
2) Housing opening for USB interface and status LED
3) M12 plug connector, 8-pole for sensor connection
4) 8-pole M12 socket for output/input signals and voltage supply
5) Holder for wall, pipe, and DIN-rail mounting
6) Transparent threaded coupling for housing opening
7) Venting element (embedded in threaded coupling)

JUMO digiLine CR head transmitter with plastic housing

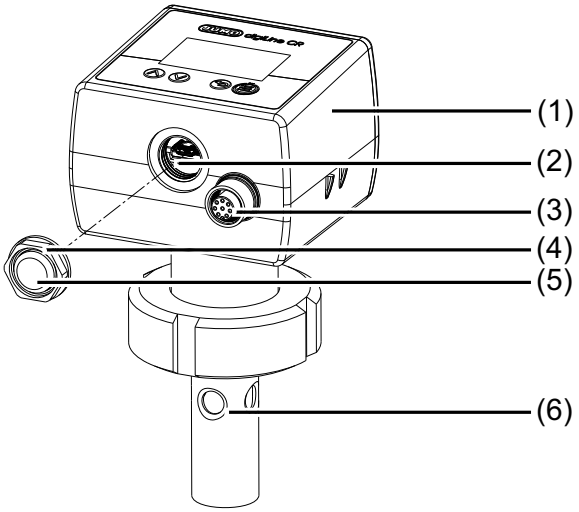

1) JUMO digiLine electronics for CR sensors
2) Housing opening for USB interface and status LED
3) 8-pole M12 socket for output/input signals and voltage supply
4) Transparent threaded coupling for housing opening
5) Venting element (embedded in threaded coupling)
6) CR sensor

3 Device Description

JUMO digiLine electronic components with stainless steel case for separate CR sensors

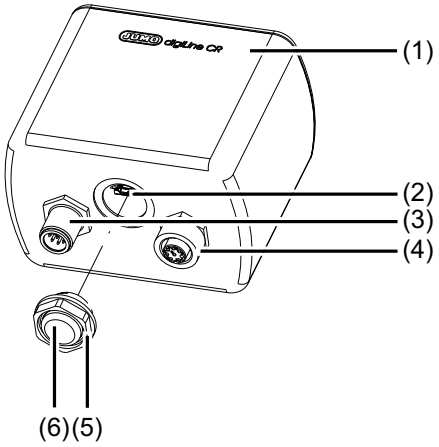

1) JUMO digiLine electronics for CR sensors
2) Housing opening for USB interface and status LED
3) M12 plug connector, 8-pole for sensor connection
4) 8-pole M12 socket for output/input signals and voltage supply
5) Transparent threaded coupling for housing opening
6) Venting element (embedded in threaded coupling)

JUMO digiLine CR head transmitter with stainless steel case

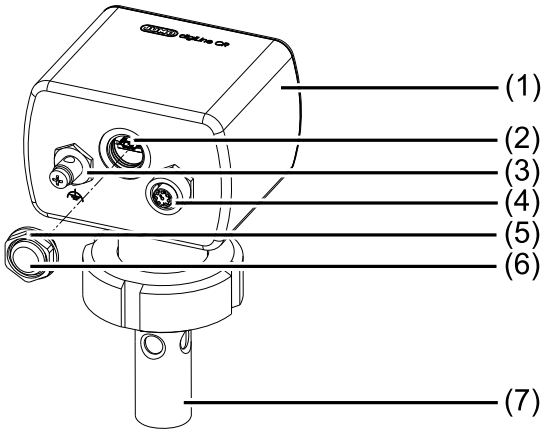

1) JUMO digiLine electronics for CR sensors
2) Housing opening for USB interface and status LED
3) Functional earth terminal
4) 8-pole M12 socket for output/input signals and voltage supply
5) Transparent threaded coupling for housing opening
6) Venting element (embedded in threaded coupling)
7) CR sensor

Display and control elements of the JUMO digiLine CR

Device version with display and membrane keyboard in plastic housing

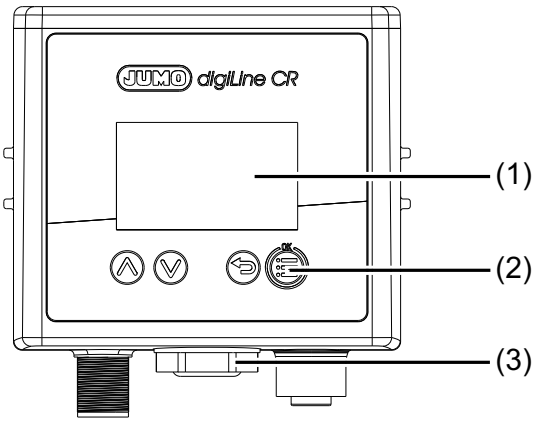

1) Display
2) Operating keys
3) Status display via transparent housing threaded coupling with internal status LED

The status is always indicated via the display (1) and – depending on the the date of manufacturing of the device – additionally via the internal status LED (3).

Device version without display or membrane keyboard in plastic housing

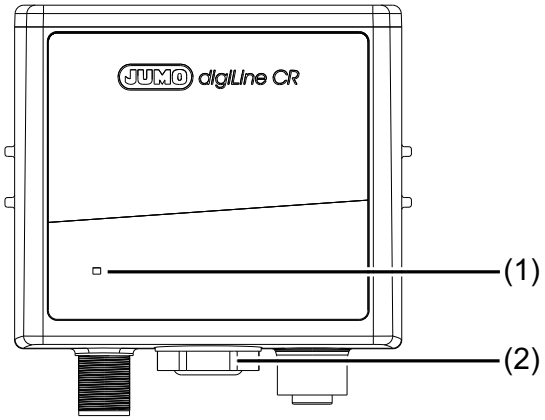

1) Status indication via status LED
2) Status display via transparent housing threaded coupling with internal status LED

Depending on the date of manufacture of the device, the status is displayed either via the status LED (1) on the front or the internal status LED (2).

Device version without display or membrane keyboard in stainless steel case

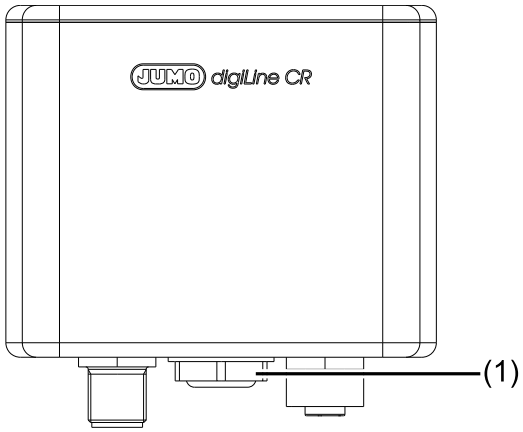

1) Status display via transparent housing threaded coupling with internal status LED

3 Device Description

3.4 Description

Device version with analog outputs for standard signal 4 to 20 mA

The analog device version has 2 analog outputs and 2 binary inputs for actuation via external switching signals. At the analog outputs, conductivity and temperature measured values are output as freely-scalable standard signals 4 to 20 mA. The binary inputs can be actuated to actuate hold functions or measuring range selection, either with potential-free contacts or with 24-Volt logic signals.

Device version with binary outputs solid state relay PhotoMOS®

The device version with binary outputs has 2 switching outputs with PhotoMOS® solid-state relays and 2 binary inputs for actuation via external switching signals. The binary outputs output the states of internal functions of the JUMO digiLine electronic components (e.g. limit value monitoring or sensor malfunction) as switching signals. The binary inputs can be actuated to actuate hold functions or measuring range selection, either with potential-free contacts or with 24-Volt logic signals.

Temperature compensation

Temperature compensation is handled by the digiLine electronics. When JUMO sensors with an integrated temperature probe are used, the JUMO digiLine electronics can obtain the temperature compensation directly from the sensor. Alternatively, a fixed temperature can be specified in the configuration of the JUMO digiLine electronics.

Calibration

Calibration can be performed either in the field on the JUMO AQUIS touch S/P or, if available, via the operating panel of the JUMO digiLine electronic components. It is also possible to calibrate at a lab workstation using the JUMO DSM software. The calibration data are saved in the JUMO digiLine electronics of the sensor. The sensor calibration can therefore be performed ahead of commissioning, so that the sensor with its JUMO digiLine electronics can then simply be mounted on the system. This reduces the plant downtime to a minimum when it becomes necessary to replace the sensor.

Calibration logbook

The JUMO digiLine electronics contain a calibration logbook in which the last 10 calibration operations are saved with the date, time, and calibration values. This logbook provides an overview of the calibration history of the sensor. The calibration logbook can be read out using the JUMO DSM software on the PC. There is no limit to the number of saved calibration logbook entries for JUMO digiLine electronics in the JUMO DSM software.

Sensor information

Numerous data such as type information, operating data, information on measuring point identification etc. are stored in the JUMO digiLine electronics. This information allows clear identification and optimal management of each sensor. All of this data can be viewed using the JUMO DSM software.

Sensor monitoring

To monitor the stress on the sensor from sensor cleaning, counters are implemented for CIP and SIP cycles. CIP and SIP cycles are recognized automatically on the basis of the criteria specified in the configuration for sensor monitoring. The counters for the CIP and SIP cycles each retain the number of cleaning processes performed. The counter readings can be displayed on the JUMO AQUIS touch S/P in order to assess the wear status of the sensor. Upon reaching a configured counter reading, an alarm is signaled on the JUMO digiLine master device and - if available - on the local display of the JUMO digiLine CR. After a sensor has been replaced, the counters are reset with the JUMO DSM software.

Limit value monitoring function

On device versions with binary outputs or an IO-Link interface, 2 limit value monitoring functions with 4 selectable basic mathematical switching functions each (Min. alarm, Max. alarm, Alarm window and Alarm window inverted) are available The limit value can be permanently configured. In addition, it is also possible to set limit value alarms acc. to USP <645> or the European Pharmacopoeia (Ph. Eur.) for purified water.

If necessary, suppression of limit value alarms that occur when switching the device on and when changing the measuring range can be configured.

Limit value monitoring can be used to monitor the analog values of the temperature and conductivity measurement inputs. The limit value alarm signals can be configured as the signal source for the binary inputs and, on device versions with binary outputs, also for the alarm buzzer of the device.

Alarm buzzer

For audible signaling of alarms, the device version with binary outputs features an alarm buzzer.

It can be linked simultaneously to 3 internal binary signals. If one of these signals triggers an alarm, an audible alarm is generated, either for a limited period of time or until all alarms are acknowledged, depending on the configuration.

Sensor stress

To assess the stress on the sensor from the thermal, the current "sensor stress" is calculated on the basis of the measurement data provided by the sensor. In the JUMO digiLine electronic components, a sensor stress alarm signal can be configured. If a critical sensor stress level is reached, this signals a sensor stress alarm on the master device and, where available, on the display of the JUMO digiLine electronic components.

Customer-specific characteristic lines

For each measuring range, a linearization table with up to 30 value pairs each can be activated in the JUMO digiLine electronic components. These show the measured electrolytic conductance to any unit (e.g. a concentration value derived from the conductance). In device versions with analog or binary outputs, the linearization tables can be used to provide customer-specific linearization of the conductivity values measured by the device.

JUMO Digital Sensor Management Software for the PC

The JUMO DSM software (DSM stands for **D**igital **S**ensor **M**anagement) can be used to manage, calibrate, and test JUMO digiLine electronics on the PC. In addition, it serves as a configuration tool for the JUMO digiLine electronics. The connection to the PC is made via the USB interface. The JUMO DSM software adds data from the memory of JUMO digiLine electronics to its sensor database. The sensor database holds calibration logbook entries, histories about replaced sensors and configuration changes to the JUMO digiLine electronics. If the JUMO digiLine electronics are to be connected to a new sensor (device versions with a separate sensor only), data for the new sensor can be reset via the JUMO DSM software and the information from the old sensor archived on the PC.

3 Device Description

4.1 Order details

4.1.1 Head transmitter (202763...)

	(1)	**Basic type**
202763		JUMO digiLine CR HT10 (head transmitter with sensor type JUMO BlackLine CR-EC)
	(2)	**Basic type extension**
10		Digital operation, plastic housing (JUMO digiLine)
15		Digital operation, metal case (JUMO digiLine)
20		Analog operation, plastic housing (with analog outputs)
25		Analog operation, metal case (with analog outputs)
40		Digital operation, plastic housing (IO-Link)
45		Digital operation, metal case (IO-Link)
50		Analog operation, plastic housing (with solid-state relays)
55		Analog operation, metal case (with solid state relay)
	(3)	**Display**
00		without display
10		With display
	(4)	**Version**
8		Standard with default settings
9		Customer-specific configuration (specification in plain text)
	(5)	**Language**
01		German
02		English
	(6)	**Cell constant**
0001		0.01 1/cm
0010		0.1 1/cm
0100		1.0 1/cm
	(7)	**Measuring insert**
1003		1× Pt100 in two-wire circuit
1005		1× Pt1000 in two-wire circuit
	(8)	**Process connection**
104		Screw connection G 1/2
144		Screw connection 1/2-14 NPT
	(9)	**Process connection material**
85		Plastic
	(10)	**Electrode material**
26		CrNi 1.4571
60		Ti (titanium)

4 Identifying the device version

	(1)		(2)		(3)		(4)		(5)		(6)	
Order code		/		-		-		-		-		-
Order example	202763	/	10	-	10	-	8	-	01	-	0010	-

(7)		(8)		(9)		(10)
	-		-		-	
1005	-	104	-	85	-	26

	(1)	**Basic type**
202764		JUMO digiLine CR HT20 (head transmitter with sensor type JUMO ecoLine CR-PVC)
	(2)	**Basic type extension**
10		Digital operation, plastic housing (JUMO digiLine)
15		Digital operation, metal case (JUMO digiLine)
20		Analog operation, plastic housing (with analog outputs)
25		Analog operation, metal case (with analog outputs)
40		Digital operation, plastic housing (IO-Link)
45		Digital operation, metal case (IO-Link)
50		Analog operation, plastic housing (with solid-state relays)
55		Analog operation, metal case (with solid state relay)
	(3)	**Display**
00		without display
10		With display
	(4)	**Version**
8		Standard with default settings
9		Customer-specific configuration (specification in plain text)
	(5)	**Language**
01		German
02		English
	(6)	**Cell constant**
0010		0.1 1/cm
0100		1.0 1/cm
	(7)	**Measuring insert**
1003		1× Pt100 in two-wire circuit
1005		1× Pt1000 in two-wire circuit
	(8)	**Process connection**
105		Screw connection G 3/4
687		Stepped collar PVC Ø 32 / DN 25
	(9)	**Process connection material**
86		Plastic (PVC)
	(10)	**Electrode material**
26		Stainless steel 1.4571
84		Graphite

	(1)		(2)		(3)		(4)		(5)		(6)		(7)		(8)		(9)		(10)
Order code		/		-		-		-		-		-		-		-		-	
Order example	202764	/	10	-	10	-	8	-	01	-	0010	-	1003	-	687	-	86	-	84

4 Identifying the device version

	(1)	**Basic type**
202765		JUMO digiLine CR HT30 (head transmitter with sensor type JUMO tecLine CR-VA)
	(2)	**Basic type extension**
10		Digital operation, plastic housing (JUMO digiLine)
15		Digital operation, metal case (JUMO digiLine)
20		Analog operation, plastic housing (with analog outputs)
25		Analog operation, metal case (with analog outputs)
40		Digital operation, plastic housing (IO-Link)
45		Digital operation, metal case (IO-Link)
50		Analog operation, plastic housing (with solid-state relays)
55		Analog operation, metal case (with solid state relay)
	(3)	**Display**
00		without display
10		With display
	(4)	**Version**
8		Standard with default settings
9		Customer-specific configuration (specification in plain text)
	(5)	**Language**
01		German
02		English
03		French
	(6)	**Cell constant**
0001		0.01 1/cm
0010		0.1 1/cm
	(7)	**Measuring insert**
1003		1× Pt100 in two-wire circuit
1005		1× Pt1000 in two-wire circuit
	(8)	**Process connection**
104		Screw connection G 1/2[ac]
105		Screw connection G 3/4[a]
106		Fitting G 1[b]
144		Screw connection 1/2-14 NPT[a]
145		Screw connection 3/4-14 NPT[b]
604		Taper socket with union nut DN 25 DIN 11851 (dairy pipe fitting)[c]
613		Clamping socket (clamp) DN 25/32/40 DIN32676[d]
	(9)	**Process connection material**
26		CrNi 1.4571
31		CrNi 1.4435
88		PVDF
	(10)	**Electrode material**
26		CrNi 1.4571
31		CrNi 1.4435
60		Ti (titanium)[a]

(11)	Extra codes
000	without extra codes
374	Inspection certificate 3.1 Material DIN EN 10204
864	Inspection certificate 3.1 Surface roughness (Ra)
955	ASTM test report
956	FDA certificate

[a] Only in combination with material process connection PVDF.

[b] At preparation stage

[c] Only in combination with material process connection PVDF and CrNi 1.4571.

[d] Only in combination with material process connection CrNi 1.4435 and CrNi 1.4571.

	(1)		(2)		(3)		(4)		(5)		(6)		(7)		(8)		(9)		(10)		(11)	
Order code		/		-		-		-		-		-		-		-		/		,
Order example	202765	/	10	-	10	-	8	-	01	-	0010	-	1003	-	613	-	31	-	31	/	000	,
													...[a]									
													000									

[a] List extra codes in sequence, separated by commas

4 Identifying the device version

	(1)	**Basic type**
202766		JUMO digiLine CR HT40 (head transmitter with sensor type JUMO tecLine CR-SL)
	(2)	**Basic type extension**
10		Digital operation, plastic housing (JUMO digiLine)
15		Digital operation, metal case (JUMO digiLine)
20		Analog operation, plastic housing (with analog outputs)
25		Analog operation, metal case (with analog outputs)
40		Digital operation, plastic housing (IO-Link)
45		Digital operation, metal case (IO-Link)
50		Analog operation, plastic housing (with solid-state relays)
55		Analog operation, metal case (with solid state relay)
	(3)	**Display**
00		without display
10		With display
	(4)	**Version**
8		Standard with default settings
9		Customer-specific configuration (specification in plain text)
	(5)	**Language**
01		German
02		English
	(6)	**Cell constant**
0001		0.01 1/cm
0010		0.1 1/cm
	(7)	**Measuring insert**
1003		1× Pt100 in two-wire circuit
1005		1× Pt1000 in two-wire circuit
	(8)	**Process connection**
104		Screw connection G 1/2[a]
613		Clamping socket (clamp) DN 25/32/40 DIN32676[a]
	(9)	**Process connection material**
31		CrNi 1.4435
	(10)	**Electrode material**
31		CrNi 1.4435
	(11)	**Extra codes**
000		without extra codes
374		Inspection certificate 3.1 Material DIN EN 10204
864		Inspection certificate 3.1 Surface roughness (Ra)
955		ASTM test report
956		FDA certificate

[a] Only in combination with material process connection CrNi 1.4435.

	(1)		(2)		(3)		(4)		(5)		(6)		(7)		(8)		(9)		(10)		(11)	
Order code		/		-		-		-		-		-		-		-		/		,	...[a]
Order example	202766	/	10	-	10	-	8	-	01	-	0010	-	1003	-	613	-	31	-	31	/	000	,	

[a] List extra codes in sequence, separated by commas

4 Identifying the device version

	(1)	**Basic type**
202767		JUMO digiLine CR HT50 (head transmitter with sensor type JUMO tecLine CR-PK)
	(2)	**Basic type extension**
10		Digital operation, plastic housing (JUMO digiLine)
15		Digital operation, metal case (JUMO digiLine)
20		Analog operation, plastic housing (with analog outputs)
25		Analog operation, metal case (with analog outputs)
40		Digital operation, plastic housing (IO-Link)
45		Digital operation, metal case (IO-Link)
50		Analog operation, plastic housing (with solid-state relays)
55		Analog operation, metal case (with solid state relay)
	(3)	**Display**
00		without display
10		With display
	(4)	**Version**
8		Standard with default settings
9		Customer-specific configuration (specification in plain text)
	(5)	**Language**
01		German
02		English
	(6)	**Cell constant**
0001		0.01 1/cm
0010		0.1 1/cm
	(7)	**Measuring insert**
1003		1× Pt100 in two-wire circuit
1005		1× Pt1000 in two-wire circuit
	(8)	**Process connection**
997		JUMO PEKA adapter system
	(9)	**Insertion length**
40.0		40 mm
70.0		70 mm
	(10)	**Process connection material**
31		CrNi 1.4435
	(11)	**Electrode material**
31		CrNi 1.4435
	(12)	**Extra codes**
000		without extra codes
374		Inspection certificate 3.1 Material DIN EN 10204
864		Inspection certificate 3.1 Surface roughness (Ra)
955		ASTM approval
956		FDA certificate

	(1)		(2)		(3)		(4)		(5)		(6)	
Order code		/		-		-		-		-		-
Order example	202767	/	10	-	10	-	8	-	01	-	0010	-
			(7)		(8)		(9)		(10)		(11)	
				-		-		-		-		-
			1005	-	997	-	40.0	-	31	-	31	-
			(12)									
				,	...[a]							
			000	,								

[a] List extra codes in sequence, separated by commas

4 Identifying the device version

	(1)	**Basic type**
202768		JUMO digiLine CR HT60 (head transmitter with sensor type JUMO tecLine CR-GT)
	(2)	**Basic type extension**
10		Digital operation, plastic housing (JUMO digiLine)
15		Digital operation, metal case (JUMO digiLine)
20		Analog operation, plastic housing (with analog outputs)
25		Analog operation, metal case (with analog outputs)
40		Digital operation, plastic housing (IO-Link)
45		Digital operation, metal case (IO-Link)
50		Analog operation, plastic housing (with solid-state relays)
55		Analog operation, metal case (with solid state relay)
	(3)	**Display**
00		without display
10		With display
	(4)	**Version**
8		Standard with default settings
9		Customer-specific configuration (specification in plain text)
	(5)	**Language**
01		German
02		English
	(6)	**Cell constant**
0100		1.0 1/cm
	(7)	**Measuring insert**
1003		1× Pt100 in two-wire circuit
1005		1× Pt1000 in two-wire circuit
	(8)	**Process connection**
105		Screw connection G 3/4
106		Fitting G 1
145		Screw connection 3/4-14 NPT[a]
604		Taper socket with union nut DN 25 DIN 11851 (dairy pipe fitting)
	(9)	**Process connection material**
88		PVDF
	(10)	**Electrode material**
84		Graphite

[a] At preparation stage

	(1)		(2)		(3)		(4)		(5)		(6)		(7)		(8)		(9)		(10)
Order code		/		-		-		-		-		-		-		-		-	
Order example	202768	/	10	-	10	-	8	-	01	-	0010	-	1003	-	105	-	88	-	84

	(1)	**Basic type**
202769		JUMO digiLine CR HT70 (head transmitter with sensor type JUMO tecLine CR-4P)
	(2)	**Basic type extension**
10		Digital operation, plastic housing (JUMO digiLine)
15		Digital operation, metal case (JUMO digiLine)
20		Analog operation, plastic housing (with analog outputs)
25		Analog operation, metal case (with analog outputs)
40		Digital operation, plastic housing (IO-Link)
45		Digital operation, metal case (IO-Link)
50		Analog operation, plastic housing (with solid-state relays)
55		Analog operation, metal case (with solid state relay)
	(3)	**Display**
00		without display
10		With display
	(4)	**Version**
8		Standard with default settings
9		Customer-specific configuration (specification in plain text)
	(5)	**Language**
01		German
02		English
	(6)	**Cell constant**
0035		0.35 1/cm
	(7)	**Measuring insert**
1005		1× Pt1000 in two-wire circuit
	(8)	**Process connection**
997		JUMO PEKA adapter system
	(9)	**Insertion length**
18.0		18 mm
38.0		38 mm
48.0		48 mm
	(10)	**Process connection material**
79		PEEK
	(11)	**Electrode material**
31		CrNi 1.4435

	(1)		(2)		(3)		(4)		(5)		(6)	
Order code		/		-		-		-		-		-
Order example	202769	/	10	-	10	-	8	-	01	-	0035	-

	(7)		(8)		(9)		(10)		(11)
		-		-		-		-	
	1005	-	997	-	18.0	-	79	-	31

4 Identifying the device version

	(1)	**Basic type**
202781		JUMO digiLine CR HT25 (head transmitter with sensor type JUMO tecLine CR-S01)
	(2)	**Basic type extensio**n
10		Digital operation, plastic housing (JUMO digiLine)
15		Digital operation, metal case (JUMO digiLine)
20		Analog operation, plastic housing (with analog outputs)
25		Analog operation, metal case (with analog outputs)
30		Analog operation II (Junior) plastic housing (with analog outputs)
35		Analog operation II (Junior) metal case (with analog outputs)
40		Digital operation, plastic housing (IO-Link)
45		Digital operation, metal case (IO-Link)
50		Analog operation, plastic housing (with solid-state relays)
55		Analog operation, metal case (with solid-state relays)
60		Analog operation II (Junior) plastic housing (with solid-state relays)
65		Analog operation II (Junior), metal case (with solid-state relays)
	(3)	**Display**
00		Without display
10		With display
	(4)	**Version**
8		Standard with default settings
9		Customer-specific configuration (specification in plain text)
	(5)	**Language**
01		German
02		English
	(6)	**Cell constant**
0010		0.1 1/cm
	(7)	**Measuring insert**
1003		1× Pt100 in two-wire circuit
1005		1× Pt1000 in two-wire circuit
	(8)	**Process connection**
104		Screw connection G 1/2
	(9)	**Process connection material**
24		Stainless steel 1.4404
	(10)	**Electrode material**
24		Stainless steel 1.4404

	(1)		(2)		(3)		(4)		(5)		(6)		(7)		(8)		(9)		(10)
Order code		/		-		-		-		-		-		-		-		-	
Order example	202781	/	10	-	10	-	8	-	01	-	0010	-	1003	-	104	-	24	-	24

4.1.2 Devices for separate sensors (202762)

	(1)	**Basic type**
202762		JUMO digiLine CR ST10 (for separate sensor)
	(2)	**Basic type extension**
10		Digital operation, plastic housing (JUMO digiLine)
15		Digital operation, metal case (JUMO digiLine)
20		Analog operation, plastic housing (with analog outputs)
25		Analog operation, metal case (with analog outputs)
40		Digital operation, plastic housing (IO-Link)
45		Digital operation, metal case (IO-Link)
50		Analog operation, plastic housing (with solid-state relays)
55		Analog operation, metal case (with solid state relay)
	(3)	**Display**
00		without display
10		With display
	(4)	**Version**
8		Standard with default settings
9		Customer-specific configuration (specification in plain text)
	(5)	**Language**
01		German
02		English
	(6)	**Extra codes**
000		Without extra code
061		UL approval[ab]

[a] The approval stipulates use of the device indoors only.

[b] List of device versions with approval: ⇨ Technical data > Approvals and approval marks.

	(1)		(2)		(3)		(4)		(5)		(6)
Order code		/		-		-		-		/	
Order example	202762	/	10	-	10	-	8	-	01	/	061

4 Identifying the device version

4.2 Accessories

The following accessories are **not** UL-approved.

Type	Part no.
JUMO DSM software (**D**igital **S**ensor **M**anagement)	00655787
Sensor connection cable with M12 cable socket, 8-pole, with the ferrules at sensor end, 1.5 m long	00710954
Sensor connection cable with M12 cable socket, 8-pole, with the ferrules at sensor end, 5 m long	00710951
Sensor connection cable with M12 cable socket, 8-pole, with the ferrules at sensor end, 10 m long	00709544
M12 cable socket, 8-pole	00444312
M12 cable socket, 8-pole, shielded	00486503
8-pole M12 connector	00444307
Pipe-mounted kit for device versions with stainless steel case	00515128

5.1 Mounting site and climatic conditions

The installation site should be, as far as possible, free from vibration. Electromagnetic fields, caused by equipment such as motors and transformers, should be avoided. The ambient temperature at the mounting site and the relative humidity must correspond to the technical data. Aggressive gases and vapors have a negative effect on the operating life of the device.

5.2 Dimensions of device versions with separate sensor

5.2.1 Device versions with plastic housing

Dimensions of the JUMO digiLine electronic components

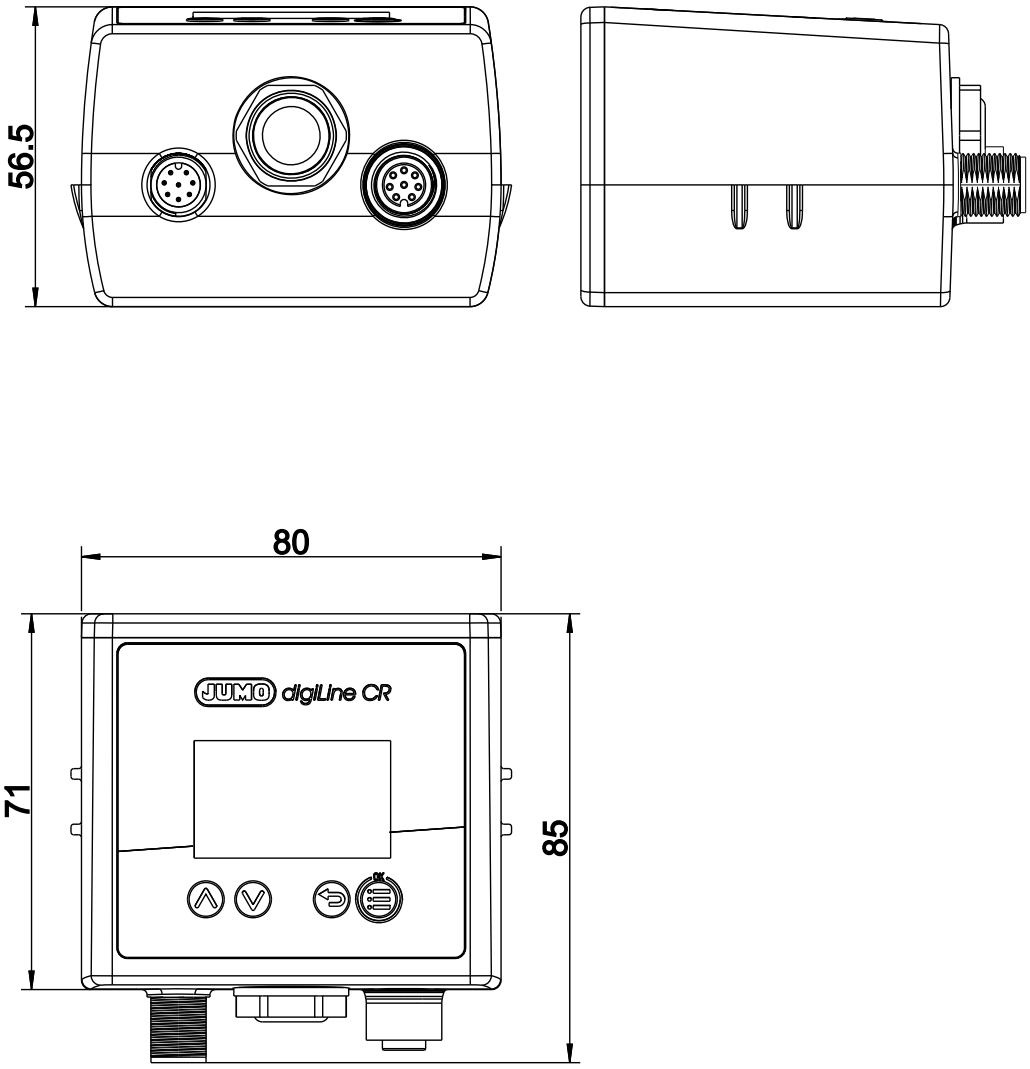

5 Mounting

Dimensions of the mounting plate for wall, pipe and DIN rail mounting

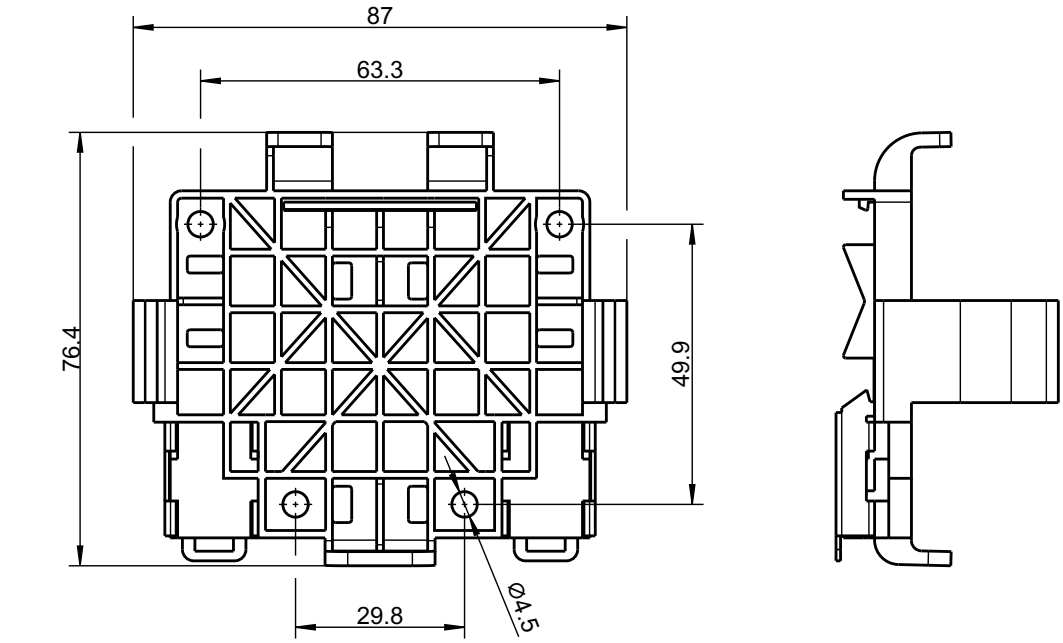

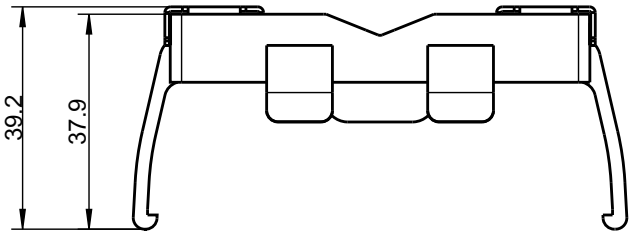

5.2.2 Device versions with stainless steel case

Dimensions of the JUMO digiLine electronic components

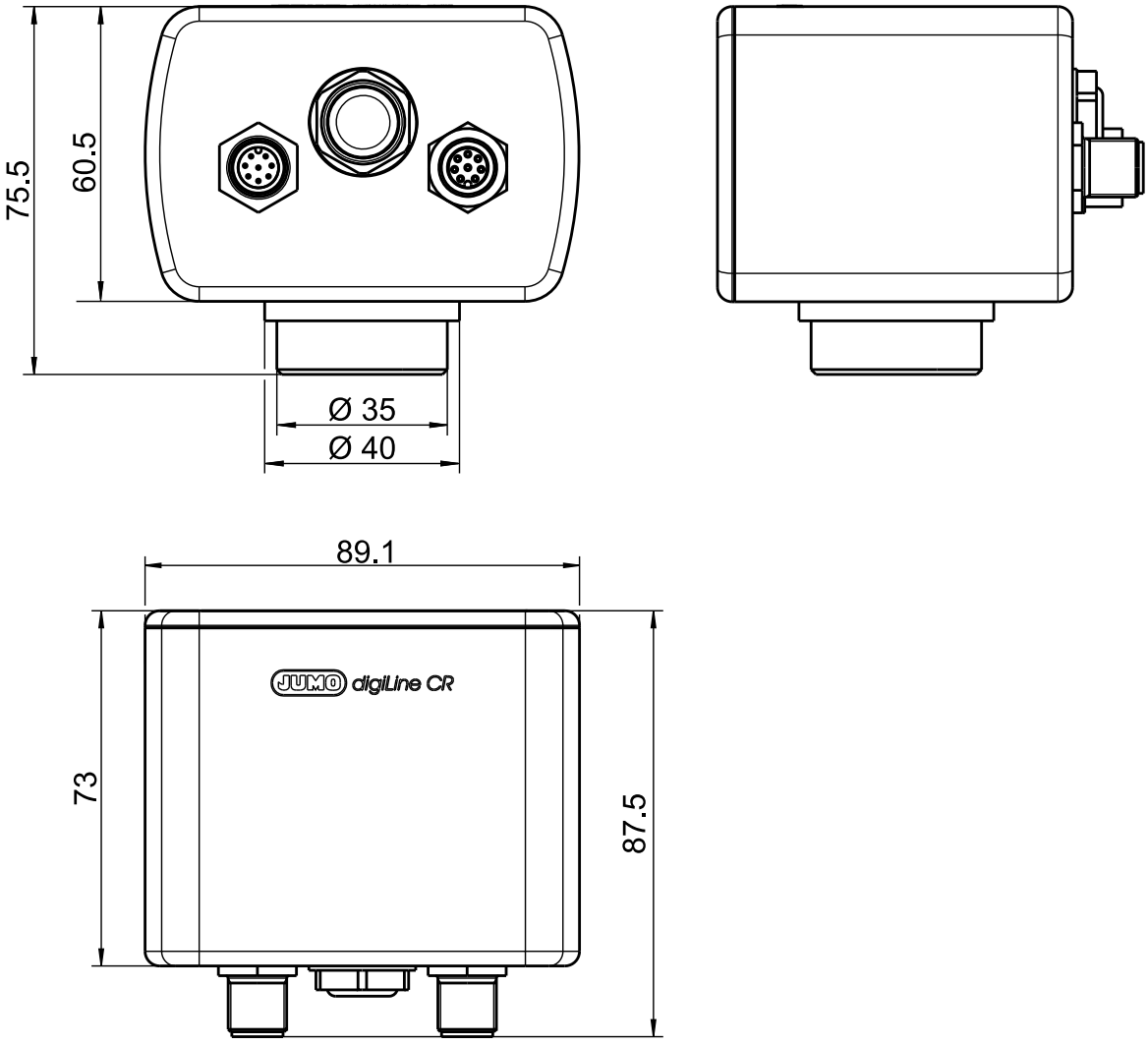

5 Mounting

Mounting plate dimensions

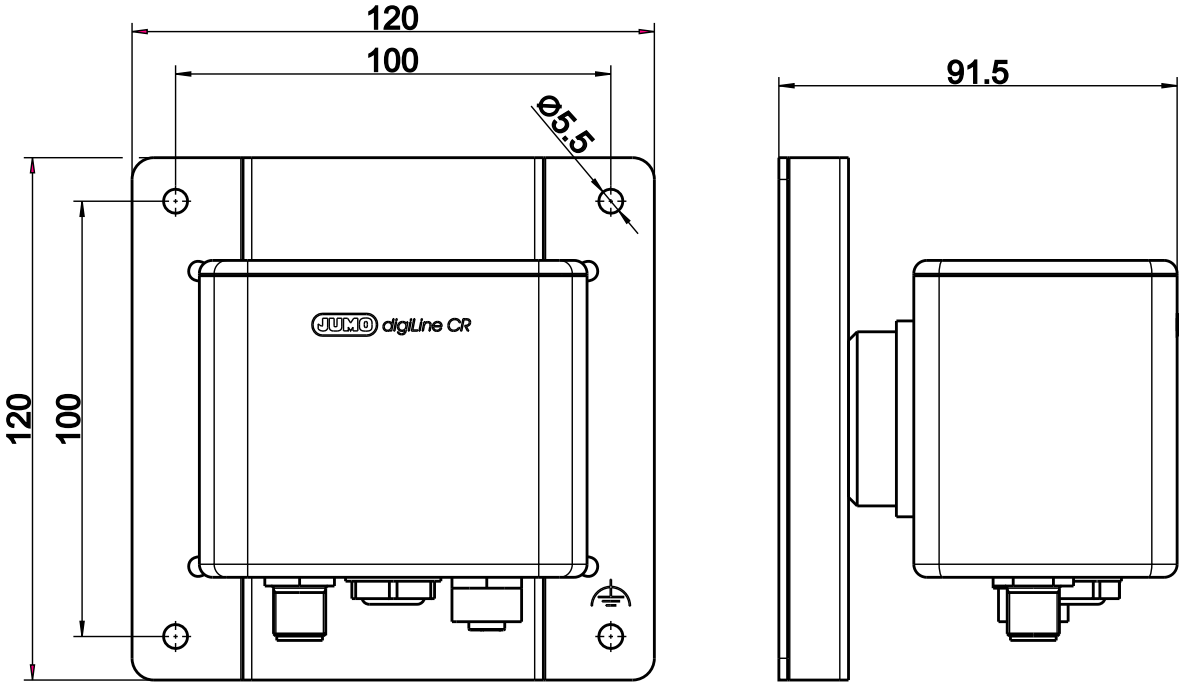

5.3 Dimensions of head transmitter

Dimensions of the JUMO digiLine electronic components with plastic housing and analog/binary outputs

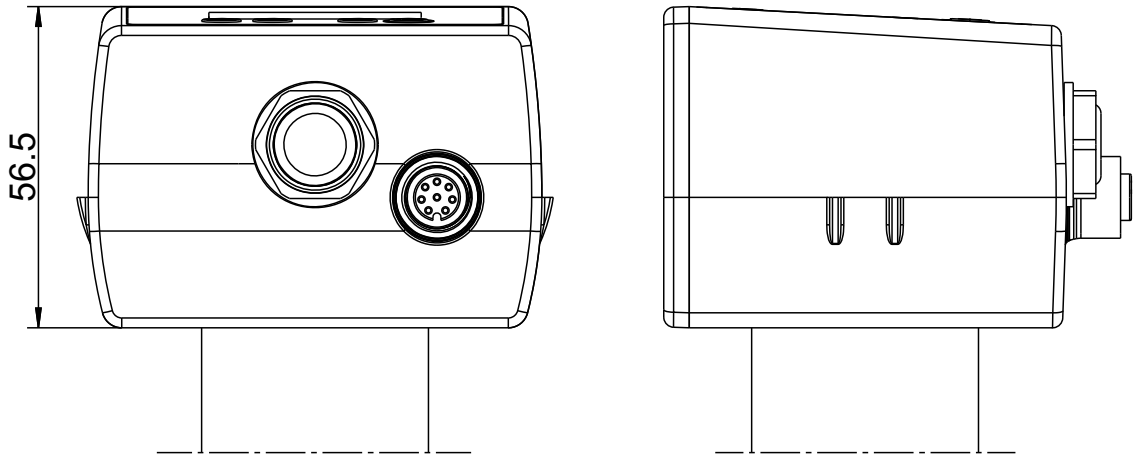

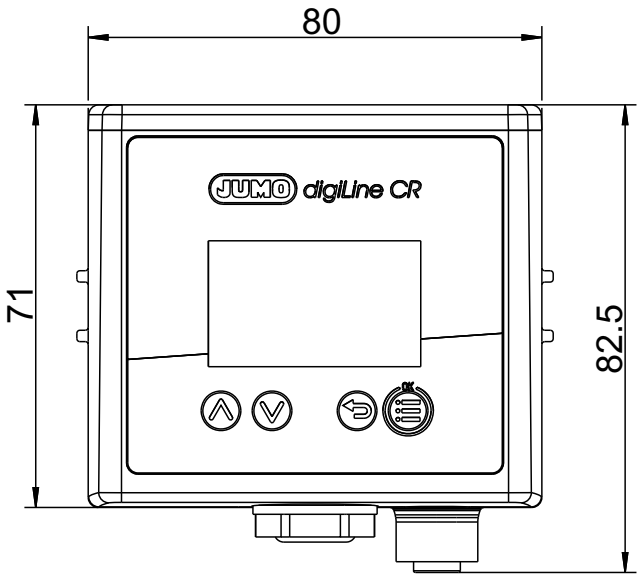

Dimensions of the JUMO digiLine electronic components with stainless steel case and analog/

binary outputs

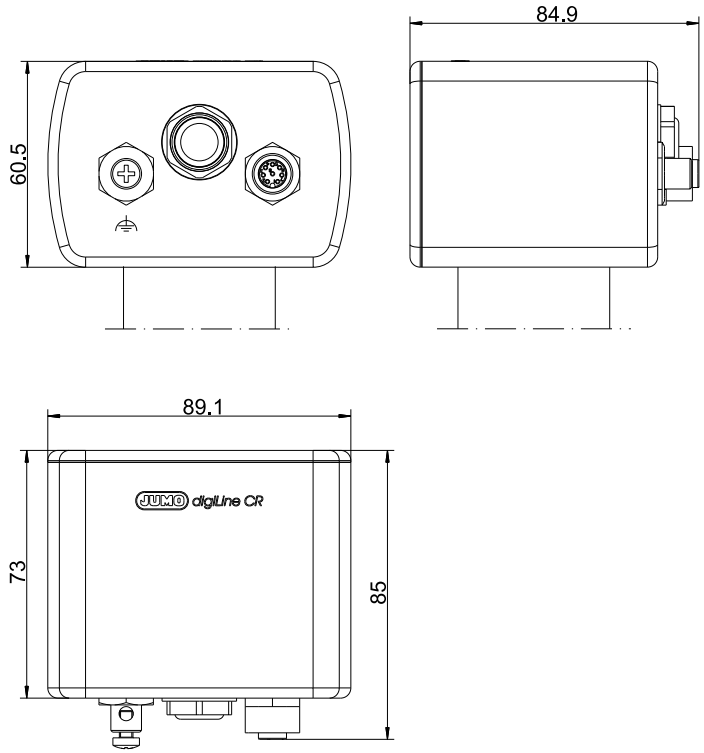

The following dimensional drawings show head transmitters with plastic housing as an example. The dimensions specified apply for all available device versions with plastic housing and stainless steel case.

202763 Process connection 104: Threads G 1/2A; cell constant 0.01 1/cm	202763 Process connection 104: Threads G 1/2A; cell constant 0.1 1/cm
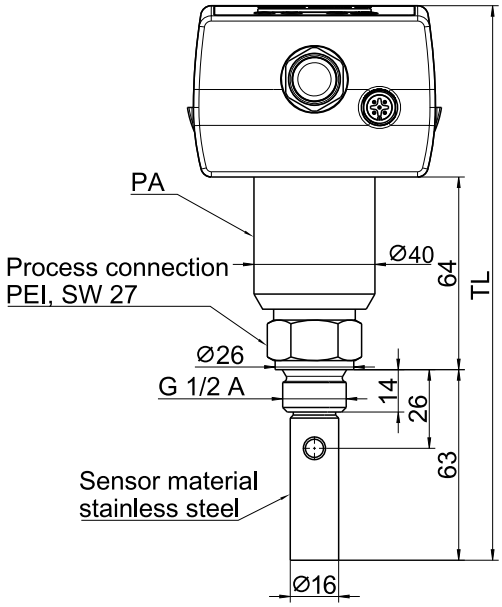	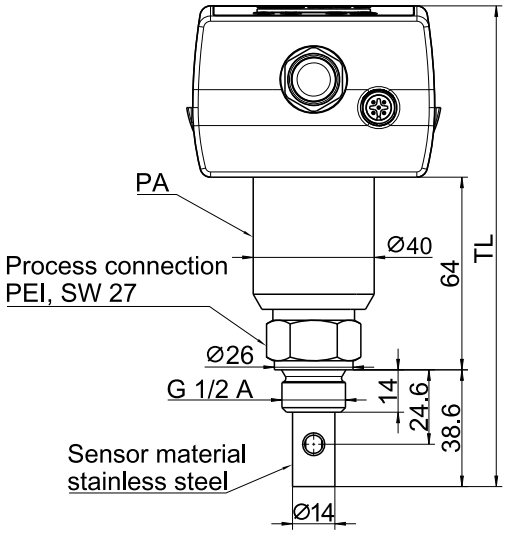
Plastic housing: TL = 183 Stainless steel case: TL = 187	Plastic housing: TL = 159 Stainless steel case: TL = 163

202763 Process connection 104: Threads G 1/2A; cell constant 1.0 1/cm	202764 Process connection 105: Threads G 3/4A; cell constant 0.1 1/cm
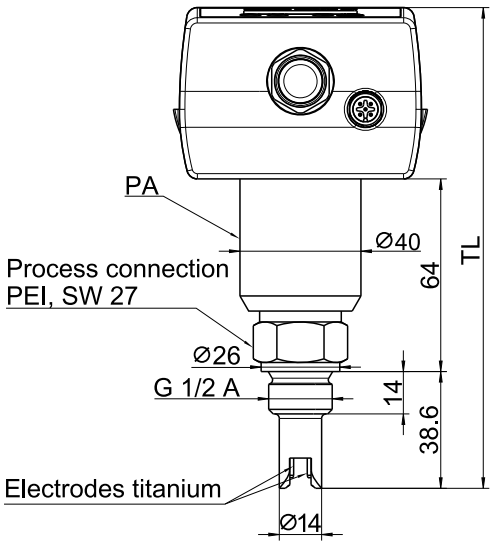	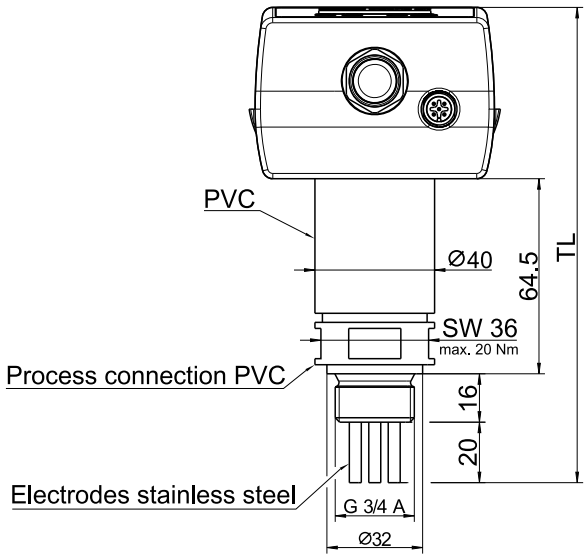
Plastic housing: TL = 159 Stainless steel case: TL = 163	Plastic housing: TL = 157 Stainless steel case: TL = 161

202764 Process connection 105: Threads G 3/4A; cell constant 1.0 1/cm	202764 Process connection 687, PVC: Stepped collar PVC DN 25; cell constant 0.1 1/cm
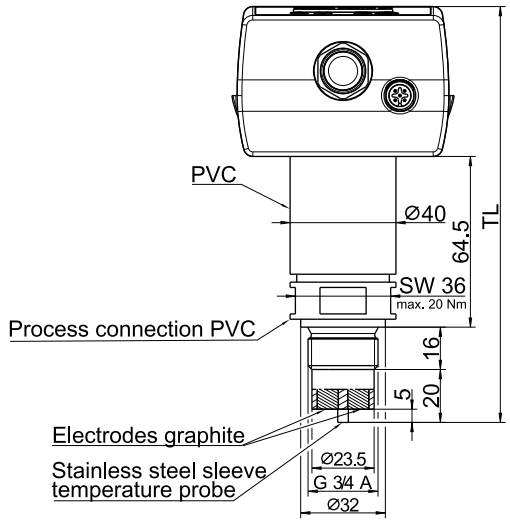	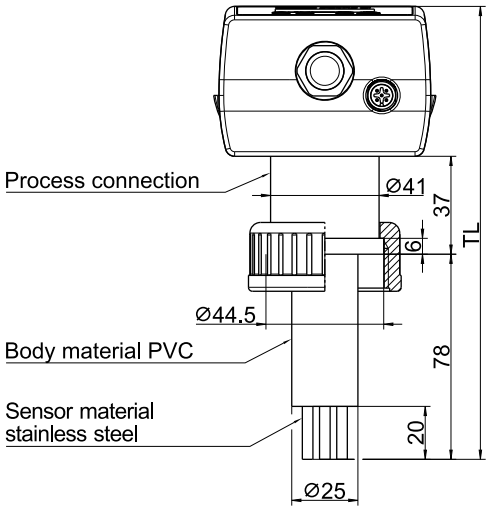
Plastic housing: TL = 157 Stainless steel case: TL = 161	Plastic housing: TL = 171 Stainless steel case: TL = 175

202764 Process connection 687, PVC: Stepped collar PVC DN 25; cell constant 1.0 1/cm	202765 Process connection 104, stainless steel: Screw connection G 1/2; cell constant 0.1 and 0.01 1/cm
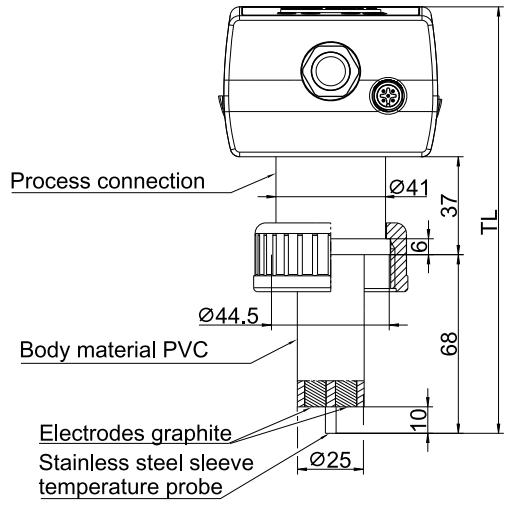	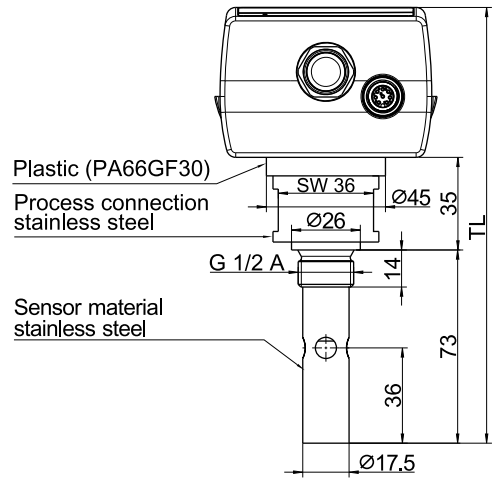
Plastic housing: TL = 161 Stainless steel case: TL = 165	Plastic housing: TL = 165 Stainless steel case: TL = 162

202765 Process connection 104, PVDF: Screw connection G 1/2; cell constant 0.1 and 0.01 1/cm	202765 Process connection 105: Threads G 3/4A; cell constant 0.1 and 0.01 1/cm
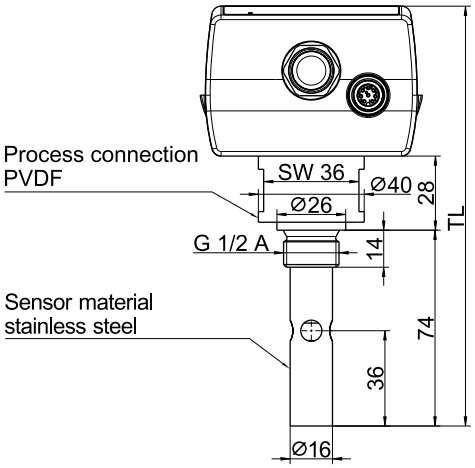	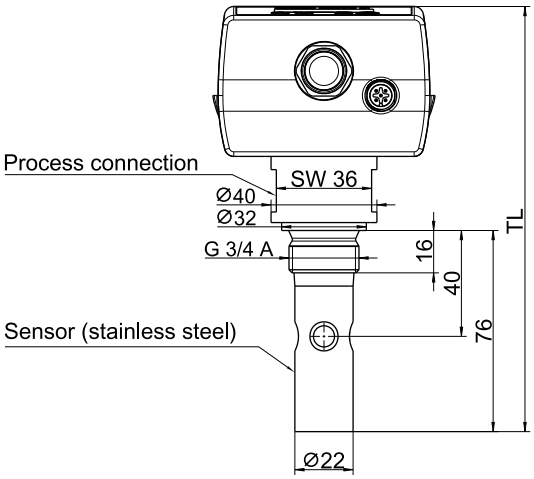
Plastic housing: TL = 159 Stainless steel case: TL = 163	Plastic housing: TL = 161 Stainless steel case: TL = 165

202765 Process connection 604: Taper socket DN 25; cell constant 0.1 and 0.01 1/cm	202765 Process connection 613: Clamping socket (clamp) DN 25; cell constant 0.1 and 0.01 1/cm
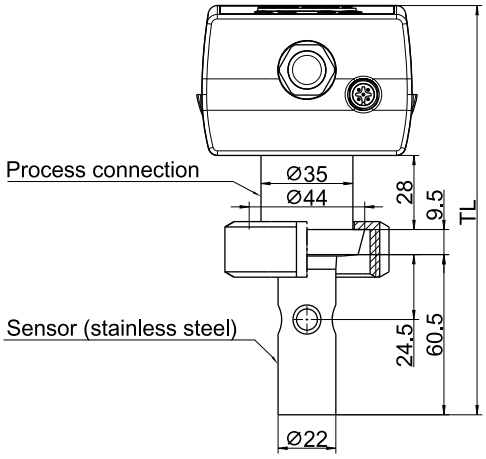	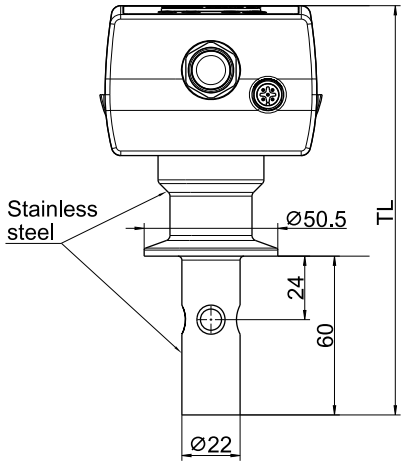
Plastic housing: TL = 155 Stainless steel case: TL = 159	Plastic housing: TL = 154.6 Stainless steel case: TL = 158.6

202766 Process connection 104: Screw connection G 1/2; cell constant 0.1 and 0.01 1/cm	202766 Process connection 613: Clamping socket (clamp); cell constant 0.1 and 0.01 1/cm
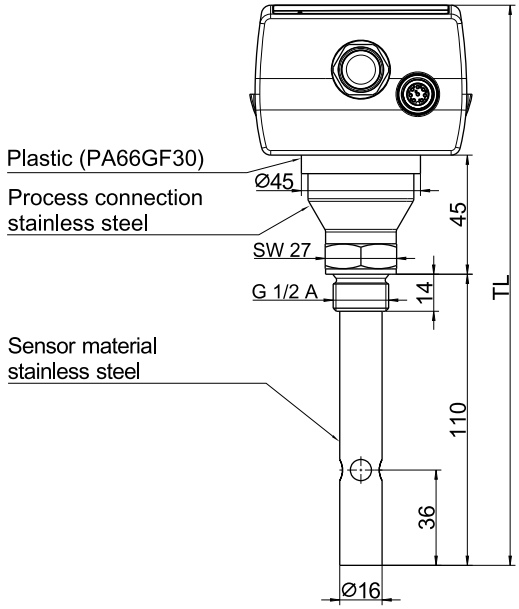	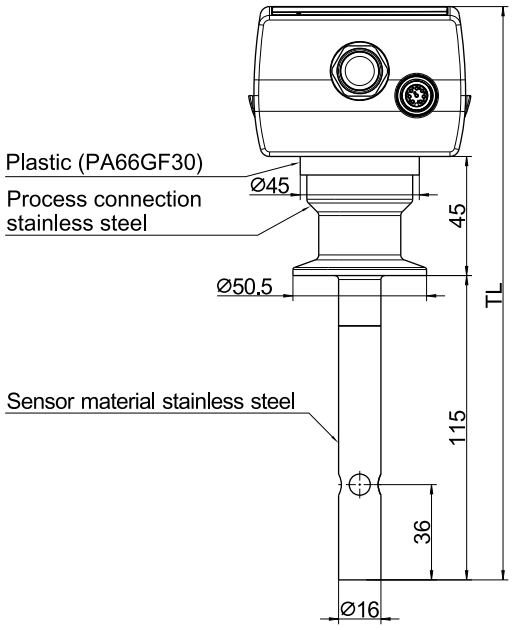
Plastic housing: TL = 212 Stainless steel case: TL = 209	Plastic housing: TL = 217 Stainless steel case: TL = 214

202767 Process connection 997: PEKA adapter system; cell constant 0.1 and 0.01 1/cm	202768 Process connection 105: Screw connection G 3/4; cell constant 1.0 1/cm
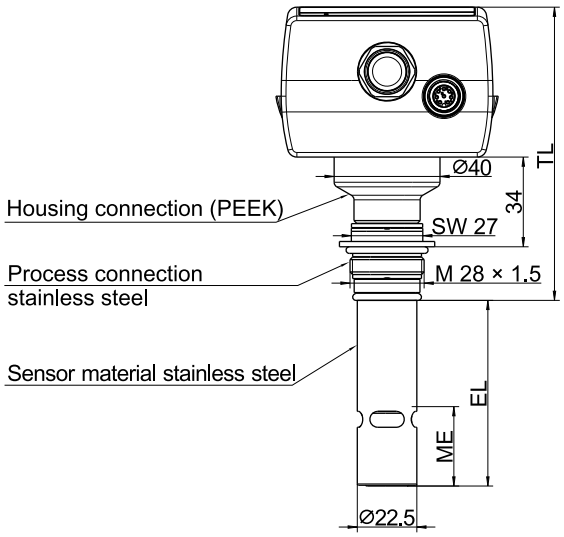	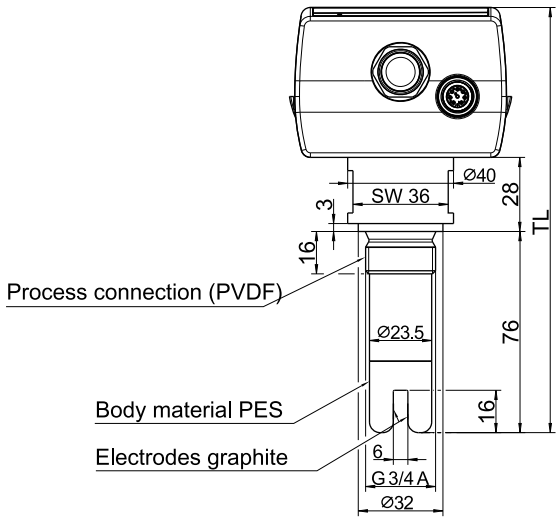
Plastic housing: TL = 111 Stainless steel case: TL = 115	Plastic housing: TL = 161 Stainless steel case: TL = 165
Available insertion length: EL = 40 mm EL = 70 mm	-
Minimum immersion depth: ME = 30 mm	-

202768 Process connection 106: Screw connection G 1; cell constant 1.0 1/cm	202769 Process connection 997: PEKA adapter system; cell constant 0.35 1/cm
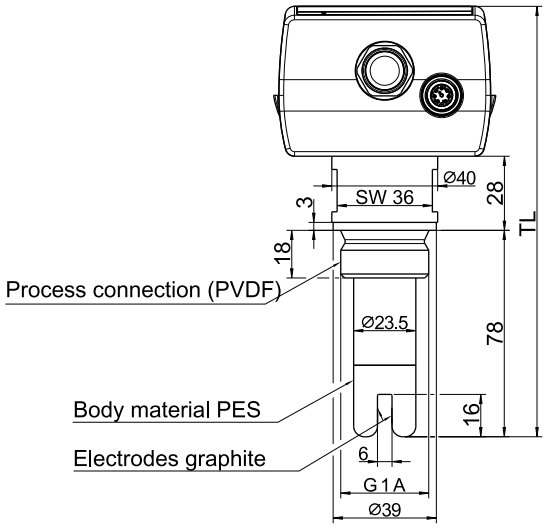	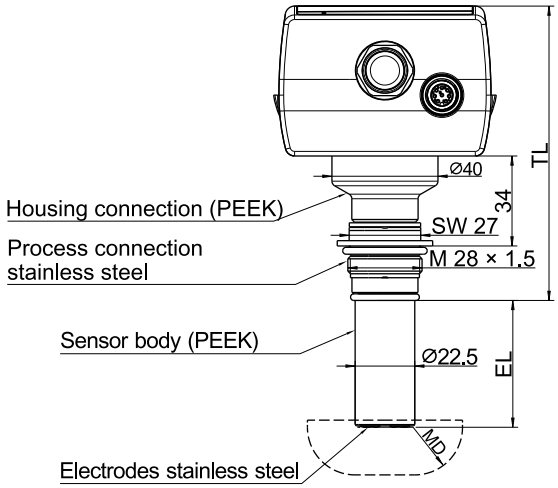
Plastic housing: TL = 163 Stainless steel case: TL = 167	Plastic housing: TL = 111 Stainless steel case: TL = 115
-	Available insertion lengths: EL = 18 mm EL = 38 mm EL = 48 mm
-	Minimum distance to container wall: MD = 18 mm

202781 Process connection 104: Screw connection G 1/2; cell constant 0,1 1/cm
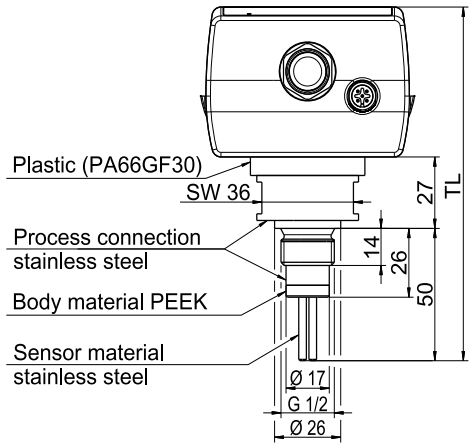
Plastic housing: TL = 134 Stainless steel case: TL = 131

5 Mounting

5.4 Mounting devices with a separate sensor

5.4.1 JUMO digiLine CR with plastic housing

Wall mounting

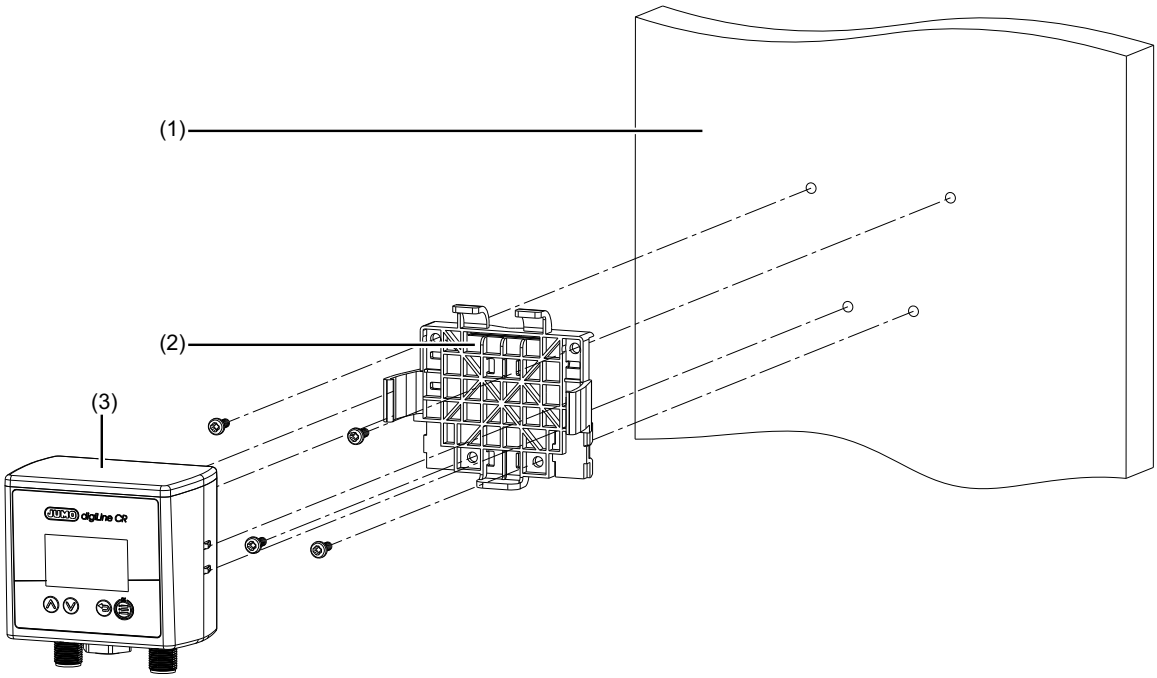

1 Wall/mounting surface
2 Mounting plate included in the scope of delivery of the JUMO digiLine CR
3 JUMO digiLine CR

DIN-rail mounting

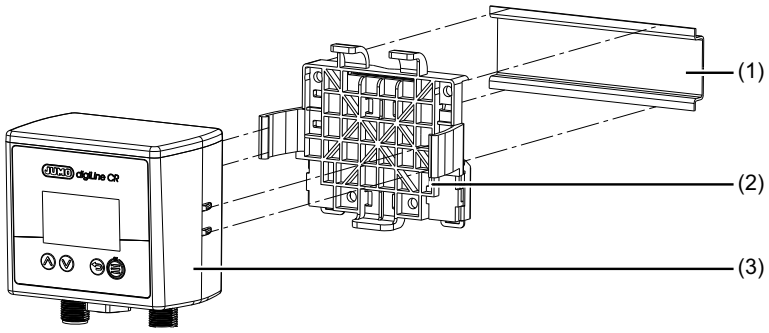

1 DIN rail
2 Mounting plate included in the scope of delivery of the JUMO digiLine CR
3 JUMO digiLine CR

Pipe mounting

When used in conjunction with cable ties, the mounting plate allows mounting of the device on horizontal and vertical pipes or masts.

This type of device installation has not been tested for UL-compliant applications and is therefore not permitted!

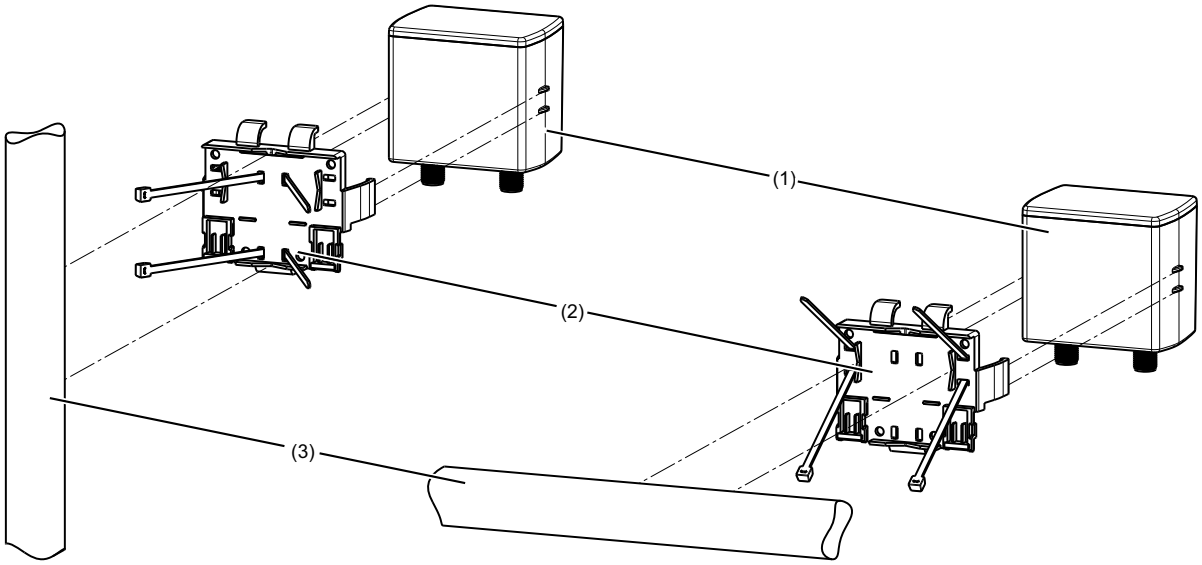

1 JUMO digiLine CR
2 Mounting plate from the scope of delivery of the JUMO digiLine CR with installed cable ties
3 Pipe/mast (at customer's site); cable ties are not included in the scope of delivery of the device.

5.4.2 JUMO digiLine CR with stainless steel case

Wall mounting

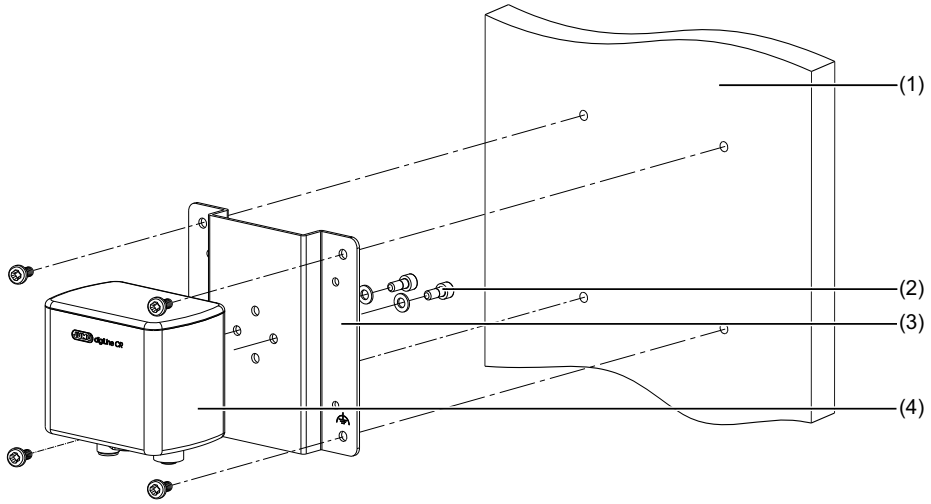

1 Wall/mounting surface
2 Screws and washers from the scope of delivery of the JUMO digiLine CR
3 Mounting plate included in the scope of delivery of the JUMO digiLine CR
4 JUMO digiLine CR

Pipe mounting

The pipe-mounted kit is available as an accessory and is suitable for mounting the device on horizontal or vertical pipes or masts.

chapter 4.2 "Accessories", Page 32

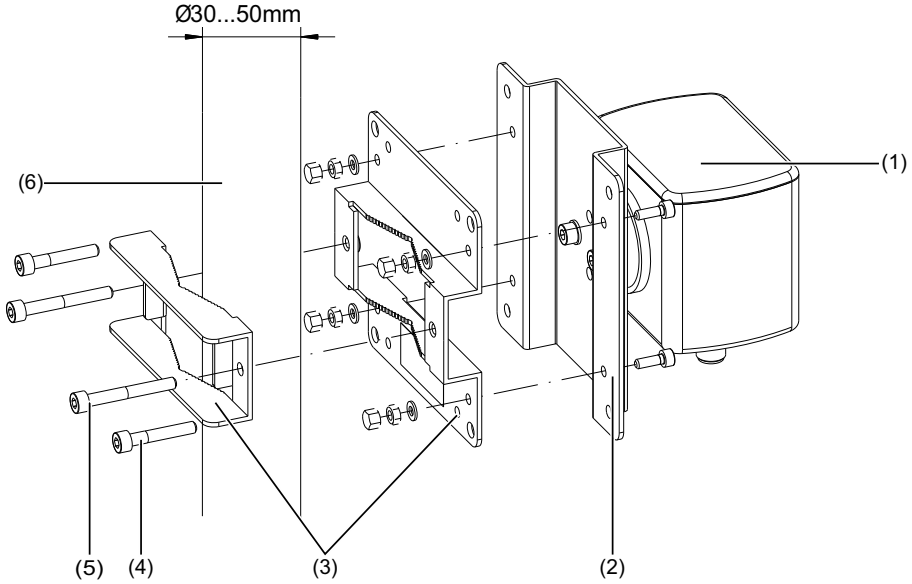

1 JUMO digiLine CR
2 Mounting plate included in the scope of delivery of the JUMO digiLine CR
3 Pipe-mounted kit (see accessories)
4 Screws M5 × 30 for pipe diameters of 30 to 40 mm
5 Screws M5 × 40 for pipe diameters of 40 to 50 mm
6 Pipe/mast (customer provision)

5.5 Mounting of head transmitters

JUMO digiLine CR Head transmitters are installed in suitable fittings, process connections or holders that accommodate the corresponding sensor type for your device. Given the variety of different sensor types available in conjunction with the JUMO digiLine CR as head transmitter, there is a corresponding variety of mounting possibilities. Please refer to the operating manual for the specific conductivity sensor to mount the various sensor types. You can determine the sensor type for your device from the order code on the nameplate and the order details in this operating manual. The operating manuals for the sensor type appropriate for your device can be found on the JUMO website using the product group number in the order details.

⇨ chapter 4 "Identifying the device version", Page 19

5 Mounting

6.1 Installation notes

NOTE!

Connection cables for connecting JUMO digiLine electronics with analog or binary outputs to systems must be shielded. Therefore, use shielded cable material when assembling these connection cables!

6.2 Connection diagram

General information

For electrical connection of JUMO digiLine electronics in device versions with analog or binary outputs, an 8-pole A-coded M12 connector with a piece of shielded cable in accordance with the following table for terminal assignment must be provided by the customer.

Refer to the connection example for transmitter operation.
⇨ chapter 6.2.3 "Connection examples", Page 54

The union nuts on the cable connecting sockets are tightened to a maximum torque of 0.5 Nm.

8-pole M12 socket for binary outputs

Pin	Potential	Symbol
1	Binary input 1	Socket 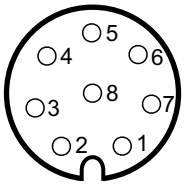
2	Binary input 2	
3	+ solid state relay 1	
4	- solid state relay 1	
5	+ solid state relay 2	
6	- solid state relay 2	
7	+ 24 V	
8	GND	

8-pole M12 bushing for analog outputs

Pin	Potential	Symbol
1	Binary input 1	Socket 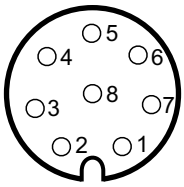
2	Binary input 2	
3	+ analog output measured value electrolytic conductance	
4	- analog output measured value electrolytic conductance	
5	+ analog output temperature measured value	
6	- analog output temperature measured value	
7	+ 24 V	
8	GND	

6 Electrical connection

Sensor connection

A connecting cable with wire end ferrules on the sensor end is available for the JUMO digiLine CR in device versions with a separate sensor (see accessories). This cable must be provided with a cable socket suitable for the sensor selected.
An 8-pole M12 connector is available for connecting JUMO sensors with a 5-wire fixed cable (see accessories).
Connect your JUMO sensor in line with the following tables.

CAUTION!

▶ The connection lines must be routed **directly** to the transmitter, not over terminal blocks.

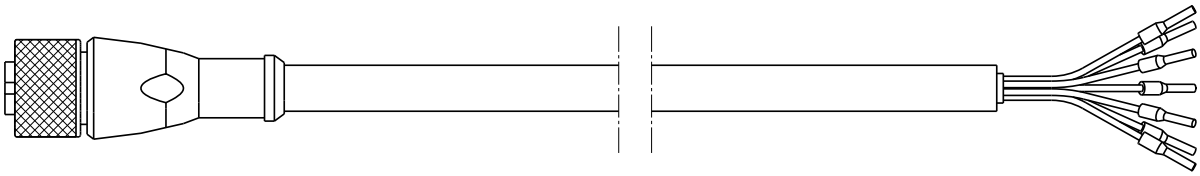

8-pole sensor connection

Pin	Wire color	Function	Symbol
1	Red	Outer electrode 1	Socket 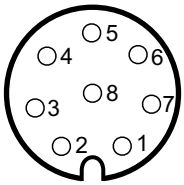 Connection side 
2	Gray	Inner electrode 1	
3	Yellow	Temperature 1	
4	Green	Temperature 2	
5	Pink	Inner electrode 2	
6	blue	Outer electrode 2	
7	Brown	Temperature 3	
8	White	Shield	

5-pole sensor connections – 8-pole sensor connecting cable

Sensor connecting cable 8-pole			Sensor-side connections	
Pin	**Wire color**	**Function**	**Angular connector**	**M12 connector 5-pole**
1	Red	Outer electrode 1	⏚	1
2	Gray	Inner electrode 1		
3	Yellow	Temperature 1	1[a]	3[b]
4	Green	Temperature 2	3[a]	4[b]
5	Pink	Inner electrode 2	2	2
6	blue	Outer electrode 2		
7	Brown	Temperature 3	3[a]	5[b]
8	White	Shield	-	-

[a] Two-wire circuit

[b] 3-wire circuit

5-pole sensor-side fixed connecting cable with 8-pole M12 connector

M12 connector 8-pole		Fixed cable on the sensor
Pin	**Function**	**Wire color**
1	Outer electrode 1	White
2	Inner electrode 1	
3	Temperature 1	Yellow[a]
4	Temperature 2	Green[a]
5	Inner electrode 2	Brown
6	Outer electrode 2	
7	Temperature 3	-
8	Shield	Shield

[a] Two-wire circuit

6.2.1 Functional ground connection for device versions with stainless steel case

Device version with separate sensor

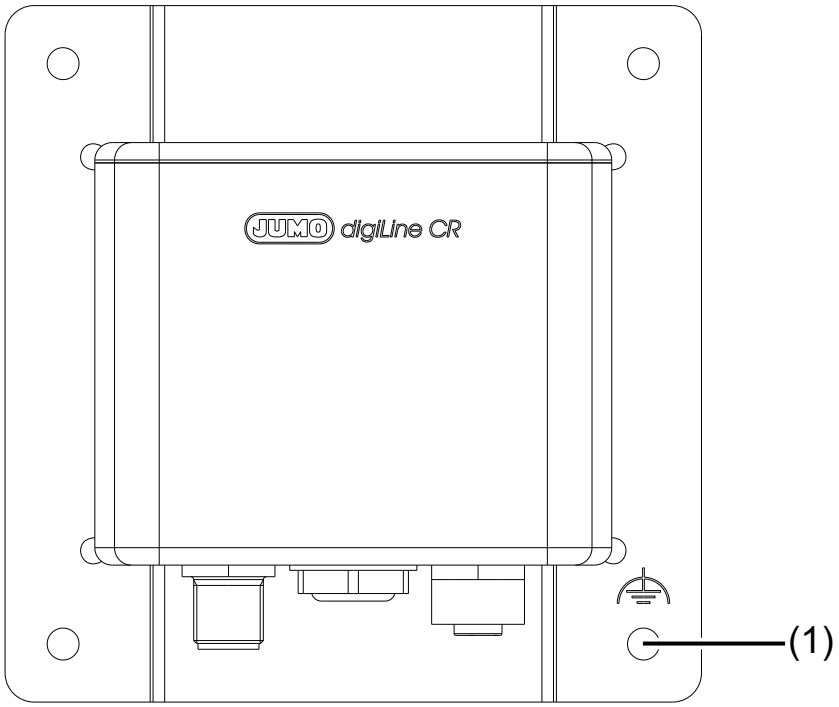

1 Connection of functional earth via fastening screw on the mounting plate

Head transmitters

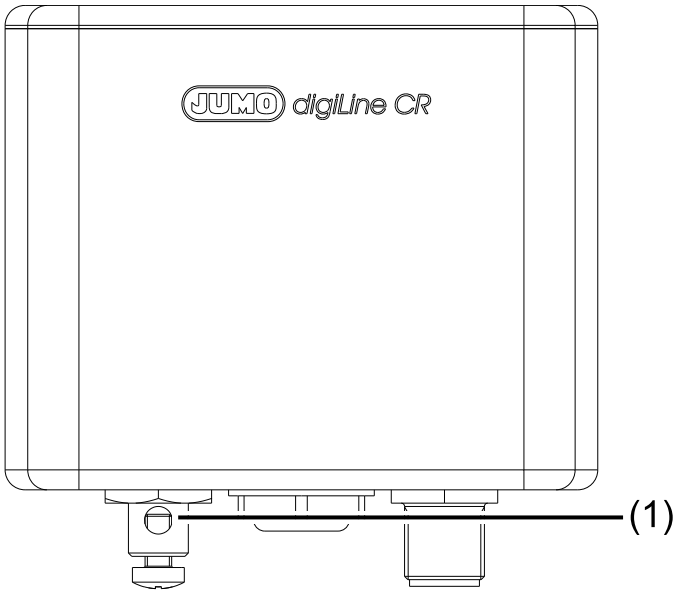

1 Functional earth terminal

6.2.2 Galvanic isolation

JUMO digiLine CR with analog outputs

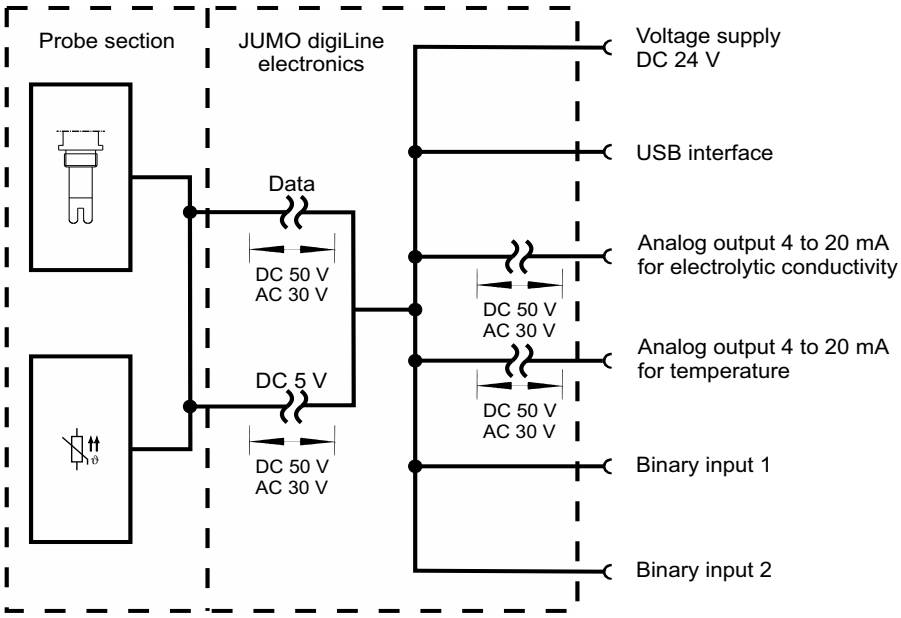

JUMO digiLine CR with binary outputs

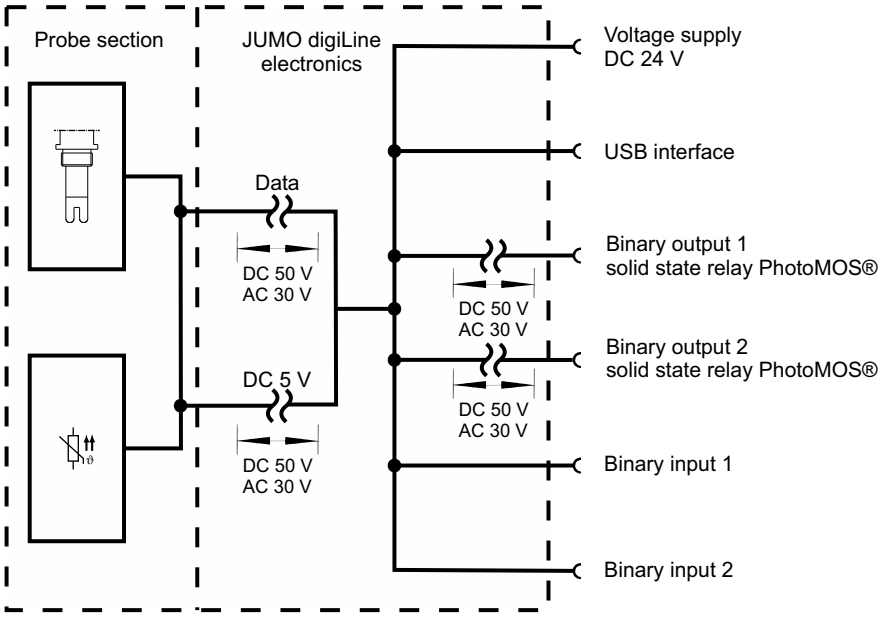

6.2.3 Connection examples

JUMO digiLine CR in device version with analog outputs (standard signal of 4 to 20 mA)

The illustration shows the connection of a conductivity sensor with JUMO digiLine CR in the device version with analog outputs to a measuring or automation device that uses standard signals of 4 to 20 mA. In addition, 2 binary signals (depending on configuration, potential-free contacts or logic signals) from the receiving automation device that can be used to activate the hold function or select one of the 2 measuring range configurations via the binary inputs of the JUMO digiLine electronics can be connected. The JUMO digiLine electronics with analog outputs of 4 to 20 mA is configured and calibrated from a PC using the JUMO DSM software or or directly on the device in the case of device versions with a display and membrane keyboard.

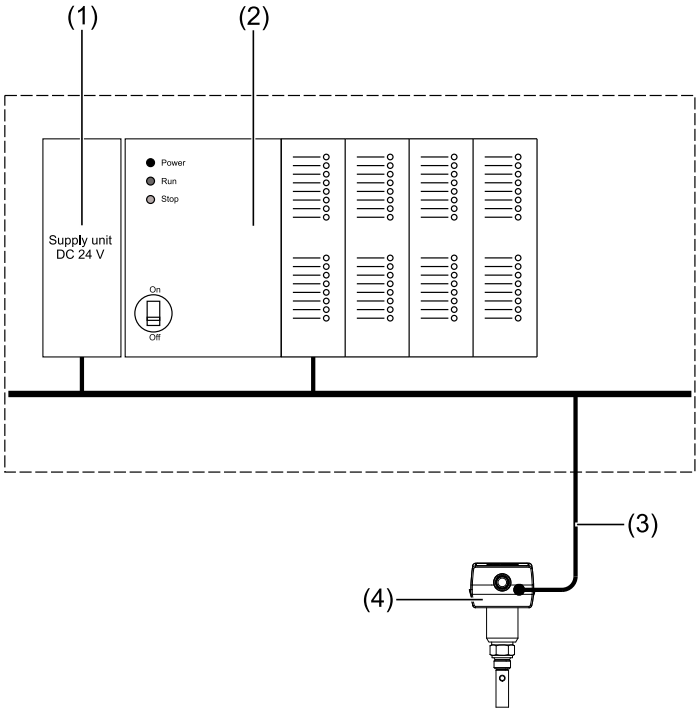

1 Stabilized power supply unit with DC 24 V output to supply the automation system and the JUMO digiLine electronics

2 Measuring or automation device with analog inputs for standard signal 4 to 20 mA and control contacts for measuring range parameter selection in the JUMO digiLine electronics.

3 Customer-provided connecting cable with 8-pole M12 connector (see chapter 4.2 "Accessories", Page 32) for connecting to the JUMO digiLine CR in the analog device version; for the connector assignment, refer to the wiring diagram in the following.

4 JUMO digiLine CR in device version as head transmitter with conductive conductivity sensor and analog outputs

Wiring diagram for transmitter mode

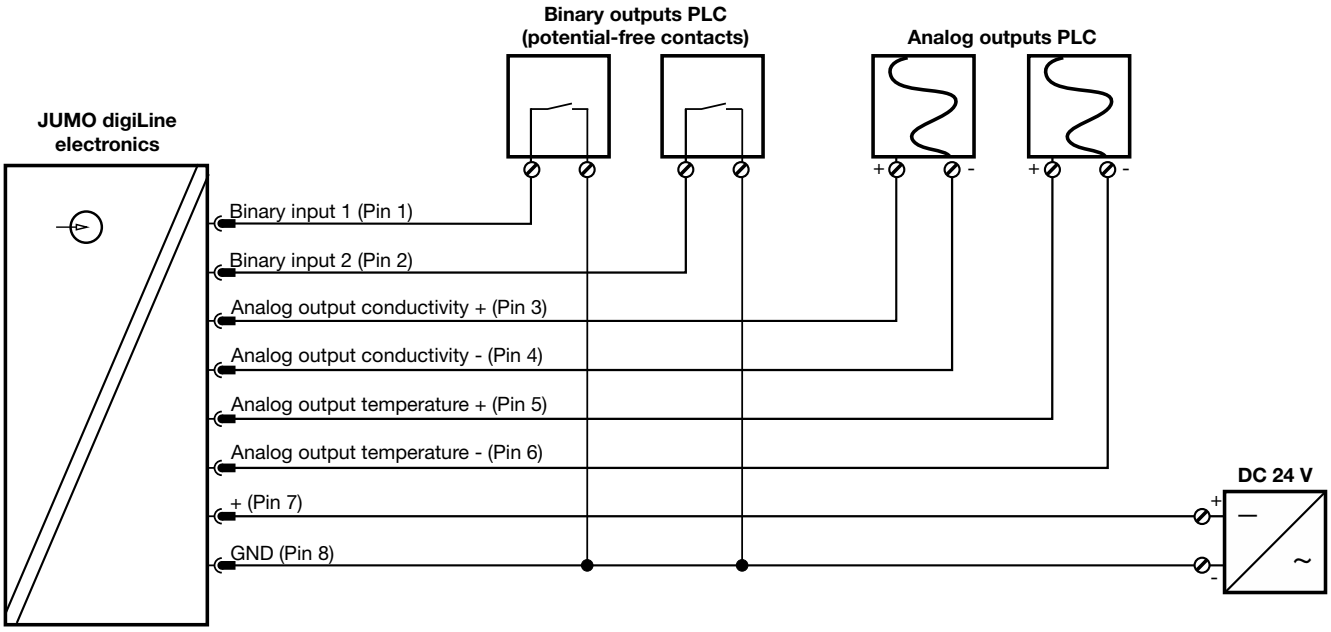

6 Electrical connection

7.1 General Information

Operating the JUMO digiLine CR

The JUMO digiLine CR is available in device versions with or without display and membrane keyboard for local operation (see chapter 3.3 "Device setup", Page 13).

All device versions have a status LED inside the housing which shines through the transparent housing threaded coupling. The device versions with plastic housing without a display also have a status LED on the front of the device.

Depending on the date of manufacture of the device, the status is displayed either via the status LED on the front or the internal status LED.

The status LEDs show the operating statuses of the device. The operating statuses are signaled as follows:

- **Flashing green in one-second interval:** Measuring mode
- **Flashing red in one-second interval:** Error (see chapter 10 "Troubleshooting in the event of faults", Page 73)
- **Flashing red very quickly (5× per second):** Serious error (see chapter 10 "Troubleshooting in the event of faults", Page 73)

Device versions with display and operating panel show their measured values and operating status (e. g. error status) locally and allow local access to some settings, device information and calibration functions of the device. There are 4 operating keys on the membrane keyboard:

Explanation	Operating key
"OK" Opens submenus and confirms entries	
"Back" Returns to the previous menu level; leaves Settings and discards entries and setting changes	
"Up" Move cursor up in the current menu level, scroll up or adjust setting values higher When the "Up" operating key is held down while adjusting numerical values, the change in the value accelerates.	
"Down" Move cursor down in the current menu level, scroll down or adjust setting values lower When the "Down" operating key is held down while adjusting numerical values, the change in the value accelerates.	

Configuration and calibration via interfaces

All device versions can be connected to a PC using USB. The device can be configured and calibrated on a PC using the **JUMO DSM software**. Refer to the operating manual for the JUMO DSM software for more details.

The USB interface is located behind the device's housing threaded coupling. Remove the housing threaded coupling to access the USB interface. Note that the protection type of the device is given for the sealed housing. Once you have finished working on the PC, the housing threaded coupling must be screwed into the housing opening of the device again.

7 Operation

Measuring mode

After the JUMO digiLine has been switched on CR the JUMO logo appears briefly on the display in device versions with a display. The device then switches to the measuring mode. The "Up" and "Down" operating keys can be used to navigate through 3 different display screens:

- Main display screen with electrolytic conductivity and temperature
- Detailed measurement display with compensated and uncompensated measured values
- Bar graph display of the sensor stress level (for degree of current sensor stress, seechapter 12.6 "CIP/SIP", Page 87)

In device versions without a display, the flashing green status LED indicates that the device is operating and there are no errors.

7.2 Device menu

The device menu is opened from the measuring mode by pressing the "OK" operating key. The submenus listed in the following table are available here.

Submenu	Explanation
Log-on/Log-out	The user logs on and out here. In addition, passwords can be changed here. ⇨ chapter 7.2.1 "Log-on/Log-out", Page 59
Calibration	Functions for calibrating the JUMO digiLine CR with the currently connected sensor ⇨ chapter 7.2.3 "Calibration", Page 60
Configuration	Device settings ⇨ chapter 12 "Configuration", Page 81
Device info	Information on device hardware and software. ⇨ chapter 7.2.4 "Device information", Page 60
Service	Functions and information on diagnosis and maintenance of the device hardware ⇨ chapter 7.2.5 "Service", Page 60

To navigate through the menu hierarchy, use the "Up" and "Down" operating keys to move the cursor to the submenu you wish to open. You can recognize the position of the cursor by the inverted appearance of the highlighted menu entry. Pressing the "OK" operating key opens the submenu marked by the cursor. Arrow symbols (pointed brackets) at the end of the line after menu entries indicate that additional submenus are available. If the number of menu entries in a menu exceeds the number of display lines, a scroll bar appears at the right edge of the display.

To change setting values (e.g. configuration settings or parameters in the Service menu) proceed through the menu structure to the desired setting item. Press the "OK" operating key. The setting value now starts to flash. While it is flashing, you can change the value with the "up" and "down" operating keys. To apply the new setting value, press the "OK" operating key again. The value stops flashing and is applied in the device.

7.2.1 Log-on/Log-out

You can log on to the device in the "Log-on/Log-out" submenu. Depending on the rights required, this is necessary to change device settings and to perform calibrations. When you are logged in, the logged-in user is shown in the header of the measurement display.

In addition, you can log out again or change passwords in the "Log-on/Log-out" submenu. The password for a user can be changed only when the user is logged in.

Factory-set passwords

Users	Administrator	User
Factory-set password	9200	300
Default rights	• General operation (measuring mode and device information)	• General operation (measuring mode and device information)
	• Calibration rights • Administrator rights	

Logon

Accessing a menu: Device menu > Log-on/Log-out > Logon

After Logon opens, the device requires that a user be selected (flashing user name). Use the "Up" and "Down" operating keys to select the desired user and confirm by pressing the "OK" operating key. The password is requested next (flashing display). The password is a numerical value. You use the "Up" and "Down" operating keys to change the password. Press the "OK" operating key to confirm the entry.

After successful logon, the logged-in user appears in the header (flashing) in the measuring mode.

Logoff

Accessing a menu: Device menu > Log-on/Log-out > Logout

Opening the menu item "Logoff" logs off logged in users from the device. The device then signals successful logoff in the display and you can return to the menu hierarchy or measured-value display by means of the "Back" key.

Change the password

Accessing a menu: Device menu > Log-on/Log-out > Change password

Log on the user for whom the password is to be changed and then open "Change password".

Once you have accessed "Change password", you are requested to enter a new password for the logged-in user (flashing password value "0"). You now use the "Up" and "Down" operating keys to change the password value to the desired value. Finally, you confirm the new password by pressing "OK" operating key. The device then indicates successful acceptance of the new password and you can use the "Back" operating key to return to the menu hierarchy or measured value display.

7.2.2 User level

The user level consists of a user-defined list of parameters and configuration settings. Up to 10 parameters can be saved. You need the JUMO DSM software to configure the user level. Using this software, the user level can be created in the configuration menu of the JUMO digiLine electronics connected to the JUMO DSM software.

The user level can be opened from the device menu only if it has been configured beforehand with the aid of the JUMO DSM software. If this is not possible, there is no user level present in the device menu. Opening the user level provides easy and uncomplicated access to the selected parameters and settings. These can be edited from here.

7.2.3 Calibration

You can find all functions for calibrating your sensor in this menu. A detailed description of the calibration procedure can be found in chapter 9 "Calibration", Page 65.

7.2.4 Device information

In device versions with a display, the "Device info" submenu is available for checking and diagnosis purposes. Information on the device hardware and software is shown here:

- **Version:** Version information on device hardware and software
- **Device version:** Description of your device version
- **Sensor information (for head transmitters only):** Information and data regarding the sensor section of the head transmitter
  ⇨ chapter 11.2 "Sensor data", Page 75
- **Sensor tag:** User-defined plain text identification marking for identifying a measuring point; the sensor tag must be entered in the JUMO digiLine electronics with the aid of the JUMO DSM software.
  ⇨ chapter 11.2 "Sensor data", Page 75.

7.2.5 Service

Maintenance functions and functions for setting the device hardware are found in the "Service" menu:

- **Contrast:** Sets the display contrast in 10 steps - adjustable by means of the "Up" and "Down" operating keys
- **Counter outputs (for binary outputs only):** To create a way to determine the wear of the relays, valves and the like connected to the switching outputs, the number of switching cycles and the duration of activation are recorded. Because the EEPROMs have a limited number write cycles, these values are not saved directly upon each actuation , but only at certain time intervals, as a result of which there may be a certain uncertainty from switching the device on and off. When the set limit values are exceeded, a service message appears on the display. The current counter values can be displayed and reset in this menu item on the device (e.g. after replacement of the worn component). On devices without a display, the service counters cannot be used.
- **CIP/SIP counter:** Display of the number of CIP/SIP cycles already performed in response to exceeding the CIP/SIP temperatures and status display of the CIP/SIP alarms. The CIP/SIP temperatures are set in the configuration data (see chapter 12.6 "CIP/SIP", Page 87).
- **Simulation outputs:** Fixed output values can be set here manually for test purposes. The following tables explain the individual settings for simulation of the output values on device versions with analog or binary outputs. In order to simulate output values, you must log in on the device as administrator. Alternatively, output values can also be simulated with the JUMO DSM software.

Settings for simulation of output values of analog outputs

Configuration item	Selection/setting option	Explanation
Simulation of analog output 1	Inactive Active	Activates simulation of the analog output value for analog output 1
Value at analog output 1	0 to 22 mA	Any output current value during active simulation of output 1
Simulation of analog output 2	Inactive Active	Activates simulation of the analog output value for analog output 2
Value at analog output 2	0 to 22 mA	Any output current value during active simulation of output 2

Settings for simulation of output values of solid-state relay outputs

Configuration item	Selection/setting option	Explanation
Simulation of binary output 1	No simulation Output inactive Output active	Activates simulation of the binary output value for binary output 1
Simulation of binary output 2	No simulation Output inactive Output active	Activates simulation of the binary output value for binary output 2
Simulation of alarm buzzer	On Off	Activates simulation of the alarm buzzer

7 Operation

General information

Startup of the JUMO digiLine CR with analog or binary outputs is described in the following.



CAUTION!

The electrical characteristics of analysis sensors are dependent upon numerous factors, e.g. aging and wear.

For accurate measurements, analysis sensors must be calibrated.

▶ In the course of startup, it is necessary to ensure that the sensor was calibrated correctly. This can be done either during startup or also in advance on a PC with the JUMO DSM software.
⇨ chapter 9 "Calibration", Page 65



WARNING!

Errors during installation, mounting, or configuration of sensors with JUMO digiLine electronics can disrupt proper execution of the downstream process or cause damage.

▶ For this reason, it is always necessary to provide safety devices that are independent of the device and to allow settings to be made only by technical personnel.

Startup of the JUMO digiLine CR with analog output (standard signal of 4 to 20 mA)

When correctly wired and configured, the JUMO digiLine electronics start operating immediately after the measuring or automation device is put into service and deliver your measured value as an analog standard signal (4 to 20 mA).. Configuration takes place on a PC running the JUMO DSM software.
⇨JUMO DSM software operating manual.

Startup of the JUMO digiLine CR with binarary outputs (PhotoMOS® solid-state relays)

When correctly wired and configured, the JUMO digiLine electronics start operating immediately after the system is put into service and deliver your switching signals on the basis of the configuration. Configuration takes place on a PC running the JUMO DSM software.
⇨JUMO DSM software operating manual.

Language selections on device versions with display

With the device switched on and in the measuring mode, press and hold the menu key until the display on the device changes to language selection. Using the "up" and "down" operating keys, you can now select one of the operating languages displayed with the cursor and then confirm your selection with the "OK" operating key.

8.1 Functional test

Functional check on the PC

The JUMO DSM software enables a sensor with JUMO digiLine electronics to be checked for proper operation. The software provides the ability to display current measured values on a PC.

⇨ JUMO DSM software operating manual



NOTE!

A voltage supply connected to the M12 socket for the device inputs/outputs is required for the full functional range of the device. Only measurement, display and menu operation are available when voltage is supplied solely via the USB socket. The analog/binary output and alarm buzzer functions are only active with voltage supply via the M12 socket.

8 Startup

9.1 General information

The actual electrical characteristics of analysis sensors always deviate somewhat from the nominal specifications. The reasons for this include:

- Like every measuring instrument, analysis sensors always have a certain uncertainty of measurement that results from manufacturing tolerances.
- During use, analysis sensors are exposed to chemical processes. Deposits and wear phenomena caused by these processes result in changes of the electrical characteristics of sensors.

To optimize the accuracy of measurements, analysis sensors must be calibrated. Calibrations are required:

- during installation or when changing a sensor
- regularly at time intervals that must be specified by the user
- if implausible measured values are displayed
- if process conditions change (e. g. as the result of equipment modification)

Each successfully completed calibration of the relative cell constant and TC calibration is recorded in the calibration logbook. The calibration logbook can be viewed on the PC using the JUMO DSM software.

9.2 Calibration methods for CR conductivity sensors (conductive)

Rel. cell constant

The deviation from the nominal cell constant of a CR sensor is described by the relative cell constant. The relative cell constant is determined by making a measurement in a test solution with a defined conductivity.

Depending on the mode set for the relative cell constant in the configuration of the conductivity input, either a common relative cell constant is used for all 2 measuring ranges or a relative cell constant is determined separately for each measuring range. If "One cell constant per measuring range" has been set, a separate calibration of the cell constant must be performed for each measuring range.

⇨ chapter 12.3.1 "CR input (resistivity conductivity)", Page 81

Temperature coefficient

The temperature coefficient is a measure of the temperature dependence of the electrolytic conductivity of a liquid. It is used to compensate for the effect of temperature when measuring the electrolytic conductivity. When performing a temperature-compensated conductivity measurement, the conductivity value measured is always indicated with reference to the fixed reference temperature. With the aid of the temperature coefficient, the value of the electrolytic conductivity displayed at the reference temperature is calculated from the current measured values of conductivity and temperature of the liquid.
The reference temperature is set in the configuration.

⇨ chapter 12.3.1 "CR input (resistivity conductivity)", Page 81

The temperature coefficient is determined from 2 measurements in a sample of the process medium from your system at different temperatures (reference temp. and operation temp.). The reference temperature is obtained from the configuration. The operation temp. (usual temperature of the process in your system) is entered by the user during the calibration or acquired automatically. The two temperatures must differ from each other by more than 6 °C.

TC curve (for nonlinear temperature coefficients)

If the conductivity of a liquid whose temperature coefficient changes with temperature has to be measured, this method can determine 6 temperature coefficients for 6 temperature intervals. In this way, it is possible to determine a good approximation of the temperature coefficient curve. While the operator brings the sample solution to the temperature values requested by the device, the device determines the

temperature coefficient for each interval. This requires installation of a temperature sensor that the device can use to sense the temperature of the sample solution. The series of temperature values consists of 7 values in total:

- "Starting temperature and end temperature of the TC-curve" (see "Calibrating the temperature coefficient curve (TC-curve)", Page 69)
- Reference temp. (see chapter 12.3.1 "CR input (resistivity conductivity)", Page 81)
- 4 additional temperature values between the "starting temperature and end temperature of the TC curve"

The "end temperature of the TC-curve" be at least 20 °C higher than the "starting temperature of the TC-curve". The two values are requested at the start of the TC-curve calibration and must be entered by the user.

The reference temperature must lie between the "starting temperature and end temperature of the TC-curve" and must differ from the starting temperature and end temperature by at least 1 °C. It is set in the configuration of the CR conductivity input.

The intervals between the starting, reference-and end temperature are automatically divided into 6 intervals by the device. The remaining 4 temperatures are determined in this way.

The TC curves for the individual measuring ranges can also be edited in the configuration menu of each measuring range by means of the JUMO DSM software.

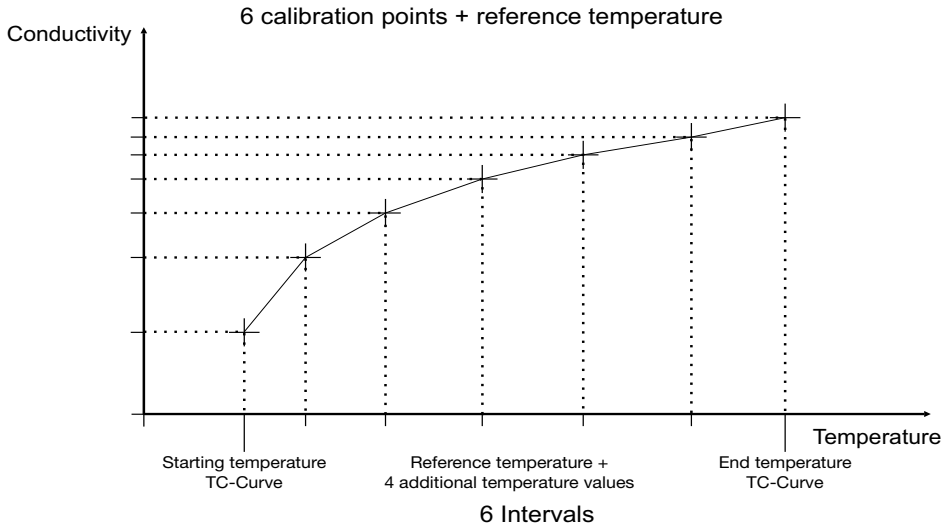

9.3 Calibration default settings

The calibration routines of the device can be enabled//locked in the calibration default settings for the "User". To do this, you must first log in on the device as "Admin".

⇨ chapter 7.2.1 "Log-on/Log-out", Page 59

In addition, the way the temperature is acquired can be set:

- **Automatic temperature acquisition:** During the calibration, the device acquires the calibration measuring points automatically by scanning past the operation or reference temperature. This is only possible when the JUMO digiLine CR measures the temperature itself with an integrated sensor
- **Manual temperature acquisition:** This setting can be selected if you wish to trigger acquisition of the calibration measuring points manually by pressing a key during calibration of the temperature coefficient.

9 Calibration

9.4 Calibrating the JUMO digiLine CR with analog/binary outputs

JUMO digiLine electronics in device versions with analog or binary outputs can be calibrated from a PC with the aid of the JUMO DSM software or via the local device controls on devices with a display. The calibration values are calculated in the JUMO digiLine electronics. The calculated calibration values and the data in the calibration logbook are saved in the JUMO digiLine electronics following successful calibration.

The procedure for calibrating with a PC is described in the operating manual of the JUMO DSM software.

9.5 Calibration via local operation in device versions with a display



CAUTION!

The conductivity measurement by the device has 2 measuring ranges.

During calibration, it is necessary to ensure that all measuring ranges used are taken into account.

▶ Calibrate the two measuring ranges individually. For the relative cell constant, the mode for the relative cell constant can also be set to 1 cell constant for all measuring ranges in the configuration of the conductivity input. If you select this setting, you only need to calibrate the relative cell constant once for both measuring ranges.
⇨ chapter 12.3.1 "CR input (resistivity conductivity)", Page 81



NOTE!

To perform calibrations, you must log in on the device as a user with calibration rights. By default, the "Administrator" has calibration rights.
⇨ chapter 7.2.1 "Log-on/Log-out", Page 59

Calibrating the relative cell constant



NOTE!

Depending on the mode set for the relative cell constant in the configuration of the conductivity input, either a common relative cell constant is used for both measuring ranges or a relative cell constant is determined separately for each measuring range
⇨ chapter 9.2 "Calibration methods for CR conductivity sensors (conductive)", Page 65

Procedure for calibrating the relative cell constant

1. Start calibration of the relative cell constant:

   Device menu > Calibrate > Calibration of relative cell constant

2. If in the configuration of the conductivity input the mode is set to "One CC for all MR", this step can be skipped.

   Use the "Up" and "Down" operating keys to select the measuring range to calibrate from measuring ranges 1 to 2 and confirm by pressing the "OK" operating key.

3. Make sure that the sensor has been cleaned and is immersed in the test solution.

   Wait until the measured value displayed stabilizes and then confirm the result of the measurement by pressing the "OK" operating key.

4. Use the "Up" and "Down" operating keys to set the conductivity value to the reference conductivity of your test solution and confirm the entry by pressing the "OK" operating key.

5. The device displays the relative cell constant determined. The relative cell constant is accepted if you press the "OK" operating key or discarded if you press the "Back" operating key. This completes the calibration.

Calibrating the temperature coefficient (TC)

NOTE!

In the calibration default settings, the "Temperature acquisition" item can be set for automatic acquisition of calibration values when the calibration temperatures are reached. This requires an integrated temperature sensor.
⇨ chapter 9.3 "Calibration default settings", Page 67
⇨ chapter 12.3.1 "CR input (resistivity conductivity)", Page 81

Procedure for calibrating the temperature coefficient (TC)

1. Start calibration of the temperature coefficient:

   Device menu > Calibrate > Calibration of temperature coefficient

2. Use the "Up" and "Down" operating keys to select the measuring range to calibrate from measuring ranges 1 to 2 and confirm by pressing the "OK" operating key.

3. Use the "Up" and "Down" operating keys to change the displayed operation temp. to the temperature value normally encountered in the process in your system and confirm by pressing the "OK" operating key. The operation temp. must differ from the configured reference temp. by at least 6 °C (see display of allowed temperature ranges on the display). The device accepts the operation temp. only if this difference exists.

4. **with "automatic" temperature acquisition (integrated temperature sensor required)**

   The current measured values for conductivity and temperature as well as operation temp. and reference temp. are shown on the display. Bring the temperature of your sample in succession to the values of the operation temp. and reference temp. The order does not matter. Value acquisition takes place automatically.

   with "manual" temperature acquisition

   The current measured values for conductivity are shown on the display. The measured temperature value is only shown if the temperature input is activated. If the temperature input is not activated, you must measure the temperature of the sample during the calibration with the aid of a separate, appropriate temperature measuring device.

   Bring the temperature of your sample in succession to the values of the operation temp. and reference temp. The order does not matter. When each of the temperatures is reached, press the "OK" operating key to trigger value acquisition.

5. The device displays the temperature coefficient determined. The temperature coefficient is accepted if you press the "OK" operating key or discarded if you press the "Back" operating key. This completes the calibration.

Calibrating the temperature coefficient curve (TC-curve)

NOTE!

A temperature measurement must be available on the device for the TC curve calibration. Without acquisition of the temperature of the process medium sample, the TC-curve cannot be calibrated.
⇨ chapter 12.3.1 "CR input (resistivity conductivity)", Page 81

Procedure for calibrating the temperature coefficient curve (TC-curve)

1. Start calibration of the temperature coefficient curve:

   Device menu > Calibrate > Calibration of TC-curve

2. Use the "Up" and "Down" operating keys to select the measuring range to calibrate from measuring ranges 1 to 2 and confirm by pressing the "OK" operating key.

3. Use the "Up" and "Down" operating keys to change the displayed starting temperature and confirm entry of the value by pressing the "OK" operating key.

   Keep in mind that the starting and end temperature must differ by at least 20 °C.

4. Use the "Up" and "Down" operating keys to change the displayed end temperature and confirm entry of the value by pressing the "OK" operating key.

   Keep in mind that the starting and end temperature must differ by at least 20 °C.

5. The device now displays in succession the calibration points of all 7 temperature values from the starting to the end temperature. Each of the temperature values to be approached and the currently measured conductivity value are displayed. Bring the temperature of your process medium sample to the each temperature displayed. When each of the temperature values is reached, automatic value acquisition takes place for the requested temperature.

6. After successful value acquisition at all 7 calibration points, a summary of the temperature coefficients determined for the individual temperature intervals is displayed. The temperature coefficients are accepted if you press the "OK" operating key, or discarded if you press the "Back" operating key. This completes the calibration.

9.6 Calibration values

General information

In the Calibration > Calibration values menu, you can view the current calibration values and also edit them manually. To enter calibration values manually, you must log in on the device as "Administrator" (see chapter 7.2.1 "Log-on/Log-out", Page 59).

Manual entry of calibration values



CAUTION!

Incorrect calibration values result in incorrect measured values!

This can disrupt proper execution of the downstream process and cause damage.

▶ Make sure that you enter the correct calibration values!

If the calibration values are known, you can enter them manually in the ***Calibration > Calibration values*** menu. This may be the case with temperature-compensated conductivity measurements, for instance, when the temperature coefficient of a liquid is known. Another important application case is the manual entry of relative cell constants of conductivity sensors. If an ASTM test certificate showing precisely measured cell constants is available, in addition to entering the nominal cell constants in the configuration of the conductivity sensor concerned (cf. chapter 12.3.1 "CR input (resistivity conductivity)", Page 81), the relative cell constants of all measuring ranges in the calibration values must be entered manually.

9.7 Calibration logbook

The calibration logbook is saved in the JUMO digiLine electronics. The last 10 successful calibrations are saved in the calibration logbook. After a connection to the digital sensor has been established successfully by the JUMO DSM software, the calibration logbook entries in the digital sensor connected to the PC are read by the JUMO DSM software and saved on the PC. There is no limit to the number of

calibration logbook entries that can be saved on the PC. Canceled or failed calibrations (calibrations outside the admissible limits) are not saved in the logbook. Manual changes of calibration values are also documented. The following data are retained in the logbook:

- Date and time (only available when calibrating with the JUMO DSM software)
- Calibration values determined or entered
- Calibration mode (true calibration/manual entry of calibration values)
- Calibration assessment (assessment of the calibration values determined during the true calibration)
- Sensor replacement counter reading (to assign the calibration logbook entries to the individual sensors in the sensor replacement history of the JUMO digiLine electronics)

The calibration logbook can be viewed on the PC using the JUMO DSM software.

9.8 Evaluation criteria for calibration

Evaluation criteria for calibration of relative cell constant

Calibration value [unit]	**invalid**			**Warning**			**OK**			**Warning**				**invalid**
Relative cell constant [%]	...	<	50	≤	...	<	75 to 125	<	...	≤	150	<	...	

Evaluation criteria for calibration of temperature coefficient

Calibration value [unit]	**invalid**		**Warning**		**OK**		**Warning**	**invalid**
Temperature coefficient [%/K]	...		<	0 to 8	<			...

9 Calibration

10 Troubleshooting in the event of faults

General troubleshooting

If malfunctions occur during operation of the JUMO digiLine electronics in a device version with analog/ binary outputs, check the following items:

- All plug-in and terminal connections must be made correctly and be tight.
- Devices with analog outputs: The maximum load resistance for the current loop must not be exceeded.
  ⇨ chapter 14.1 "Analog outputs 4 to 20 mA", Page 97
- The voltage supply for the device must be intact and stable (cf. chapter 6.2 "Connection diagram", Page 49 and chapter 14.5 "Electrical data", Page 99).

Status LED on device versions without display

The status LED indicates the operating/fault status of the device.

LED indication	Explanation
Flashing green in one-second interval	The device is in the measuring mode (no faults).
Flashing red in one-second interval	A valid temperature value and/or conductance could not be determined. Connect the device to a PC and check its operation and configuration with the aid of the JUMO DSM software.
Flashing red very quickly (5× per second)	A serious fault has occurred (data loss in device-internal data). Load the configuration into the device again with the aid of the JUMO DSM software and then switch the device off for a restart and then back on again. If the fault is still present, calibrate the device. If the fault persists, the device must be returned and repaired by JUMO Service.

10 Troubleshooting in the event of faults

11.1 General Information

Information about the device and its process/operating data is stored in the JUMO digiLine electronics. This information can be viewed using the JUMO DSM software.

The operating data includes signals such as alarms, measured values and sensor monitoring data. The measured values can be displayed and the status of sensor operation observed using the JUMO DSM software.

11.2 Sensor data

The sensor data provides an overview of sensor characteristics and settings. No data can be edited here. All data that can be saved in the device (depending on the device version) is listed in the following.

Data point	Explanation
Manufacturer's data	
Device name	Type information as well as software and hardware version of the JUMO digiLine CR
Software version of the main processor	
Software version of the input processor	
Hardware version	
Sensor type	Article information on the sensor mounted on the JUMO digiLine electronics is entered in these fields by the manufacturer during production. The data are displayed in the JUMO DSM software.
Sensor subtype	
Manufacturers	
Customer order number	
VK job number	
Part no.	
Customer type	
Order code	
Customer item number	
Customer number	
Serial number	
Hardware address	
Date of manufacture	
Cal. status	
Sensor information	
Minimum ambient temperature	These fields hold data on the sensor type currently in use.
Maximum ambient temperature	
Minimum medium temperature	
Maximum medium temperature	
Minimum conductivity	
Maximum conductivity	
Maximum pressure at 25 °C	
Material in medium	
Material not in contact with medium	
Process connection	
Tests / approvals	
Cell constant	

11 Data overview

Data point	Explanation
	Measuring point information
TAG number	The "TAG number" identifies the measuring point with a unique ID assigned by the user using the JUMO DSM software. With the aid of the "TAG number", the JUMO digiLine electronics can be assigned to a designated digital sensor input of a JUMO AQUIS touch S/P. When "TAG check" is activated in the JUMO digiLine master, matching of the sensor's "TAG number" and the digital sensor input is checked by the JUMO AQUIS touch S/P. If there is no match, the JUMO digiLine electronics are not linked to the master. The "TAG number" of the JUMO digiLine electronics can be edited only with the JUMO DSM software.
Description	Text field for a description of the measuring point. The description can be edited only with the JUMO DSM software.
Sensor origin	The "Sensor origin" is assigned by the JUMO digiLine master to which the JUMO digiLine electronics were last connected and provides information about the device on which the JUMO digiLine electronics were last connected.

11.3 Process values

Data point	Explanation
Uncomp. actual value	Electrolytic conductivity in the unit set in the configuration data and without consideration of the effect of temperature
Compensated actual value	Measured value of the electrolytic conductivity in the unit set in the configuration data and with correction for the effect of temperature
Conductivity invalid	In the event of a fault during the conductivity measurement (e. g. as the result of a measuring range violation or compensation error), this alarm is triggered.
temperature	**only for conductivity sensors with an integrated temperature probe:** current value measured by the integrated temperature probe
Temperature alarm signal	In the event of a fault during the temperature measurement (e. g. as the result of a measuring range violation), this alarm is triggered.
Sensor stress	The "Sensor stress" value reflects the current level of stress on the sensor from rapidly changing temperatures and aggressive media (high conductivity values measured in the high-purity water measurement or elevated reactivity at high temperatures).
Sensor stress pre-alarm state	This pre-alarm is generated at a sensor stress level greater than 3.
Sensor stress alarm state	In addition to the "Sensor stress pre-alarm", this alarm is triggered at a sensor stress level greater than 7.
CIP counter	Number of previous CIP cycles identified as having exceeded the CIP temperature The CIP temperature is set in the configuration data. ⇨ chapter 12 "Configuration", Page 81
SIP counter	Number of previous CIP cycles identified as having exceeded the SIP temperature The SIP temperature is set in the configuration data. ⇨ chapter 12 "Configuration", Page 81
CIP/SIP pre-alarm signal	On reaching the maximum number of CIP or SIP cycles set for this pre-alarm signal, this pre-alarm is triggered. The maximum number of CIP/SIP cycles for this pre-alarm is set in the configuration data. ⇨ chapter 12 "Configuration", Page 81

Data point	Explanation
CIP/SIP alarm signal	On reaching the maximum number of CIP or SIP cycles set for this alarm signal, this alarm is triggered. The maximum number of CIP/SIP cycles for this alarm is set in the configuration data. ⇨ chapter 12 "Configuration", Page 81

11 Data overview

11.4 Operating data

Data point	Explanation
Operation hours counter	The operating hours counter records the total operating time of the JUMO digiLine electronics to the second. It cannot be configured or reset.
Sensor replacement counter	The sensor replacement counter records how often sensors on the JUMO digiLine CR were replaced. It provides a history on the PC of archived sensor information and calibration logbook entries for every sensor with which the JUMO digiLine electronics were operated. The sensor replacement counter is incremented by the JUMO DSM software. ⇨ JUMO DSM software operating manual
Initial startup date	Date of the initial startup on a JUMO AQUIS touch S/P
Operating hours counter reading at initial startup	Operating hours counter reading at startup on a JUMO digiLine master
Drag indicator for temperature	
Lowest temperature value	Data on the highest or lowest temperature values that occurred inside the device in the course of operation to date.
Highest temperature value	
Time of lowest temperature value	
Time of highest temperature value	
Operating hours counter reading at lowest temperature	
Operating hours counter reading at lowest temperature	
Extreme conditions[a]	
Total time below the minimum temperature	Total time violating the admissible min./max. values of temperature and electrolytic conductivity The min./max. values of temperature and electrolytic conductivity depend on the sensor used and are stored in the "Sensor information".
Total time above the maximum temperature	
Total time above the maximum conductivity value	
Number of times below the minimum temperature	Number of times above or below the admissible min./max. values of temperature and electrolytic conductivity The min./max. values of temperature and electrolytic conductivity depend on the sensor used and are stored in the "Sensor information".
Number of times above maximum temperature	
Number of times above the maximum conductivity value	

[a] only available on device versions as head transmitter

11.5 Calibration data

Data point	Explanation
Rel. cell constant	The deviation from the nominal cell constant is described by the relative cell constant. It is established by the calibration.
Remaining running time on calibration timer	Elapsed time on calibration timer When this time has elapsed, the calibration alarm is triggered to signal that a calibration is due.
Calibration alarm	The calibration alarm is triggered when the time set on the calibration timer has elapsed and generates a corresponding signal on the device. On device versions with a display, the calibration alarm flashes in the header of the display.

11 Data overview

12.1 General Information

JUMO digiLine electronics in device versions with analog or binary outputs and display can be configured by means of the operating keys on the device or from a PC with the aid of the JUMO DSM software. To change configuration settings, you must log on to the device as "Administrator" beforehand (see chapter 7.2.1 "Log-on/Log-out", Page 59).

Device versions without display must be configured from a PC with the aid of the JUMO DSM software. You can find more on this in the operating manual for the JUMO DSM software.

The tables in this chapter explain all of the configuration parameters of the JUMO digiLine electronics.

12.2 Important information



CAUTION!

Incorrect configurations can cause sensor malfunctions.

The consequence may be erroneous measured values.

▶ Prior to startup, check all information in the configuration.

12.3 Input

12.3.1 CR input (resistivity conductivity)

Configuration item	Selection/setting option	Explanation
Signal for Hold	No hold Binary input 1 Binary input 2	Selects the binary input for activation of hold function for the measured conductivity value When hold is activated, the measured conductivity value is frozen and sensor monitoring alarms are suppressed (see chapter 12.6 "CIP/SIP", Page 87).
Measuring range selection	No function Binary input 1 Binary input 2	Selects the binary inputs for selection of the measuring range Measuring range selection permits selection of the measuring ranges 1 to 2 by controlling the binary signals. ⇨ chapter 12.3.2 "Measuring ranges 1 to 2 for the CR input", Page 83
Compensation temperature	Manual temperature Temperature input	Selects the source for the compensation temperature **Manual temperature:** Compensation using a fixed temperature value entered in the "Manual temperature" configuration item. **Temperature input:** The integrated temperature probe of the sensor supplies the compensation temperature.
Manual temperature	-50 to +250 °C	Constant compensation temperature value If the **"Compensation temperature"** configuration item is set to **"Manual temperature"**, this value is used for temperature compensation of the measured conductivity value.
Reference temperature for linear TC	15 to 30 °C	**required only for conductivity measurement with "TC linear", "TC curve" and TDS temperature compensation:** The temperature at which the conductivity value displayed was set
Wire break detection	Off On	A sensor alarm is activated in the event of a sensor wire break when this function is activated.

Configuration item	Selection/setting option	Explanation
Filter Time Constant	0.0 to 25.0 s	Optimization of measured value updating The larger the value of the filter time constant, the slower is the change in measured value at the output.
Rel. cell constant mode	One CC for all MR One CC for each MR	This parameter can be used to specify whether one relative cell constant should be used for all 2 measuring ranges, or whether each measuring range should have its own cell constant and that is used for the measured value calculation. ⇨ "Calibrating the relative cell constant", Page 68
Nominal cell constant	0.01 to 10 cm^{-1}	**only for device versions with a separate sensor** nominal cell constant of the conductivity sensor (can be read from the sensor nameplate) If an ASTM test certificate showing precisely measured cell constants is available, in addition to entering the nominal cell constants in the configuration the relative cell constants in the calibration values must be entered manually (cf. chapter 9.6 "Calibration values", Page 70).

12.3.2 Measuring ranges 1 to 2 for the CR input

Measuring range selection

The measuring ranges can be selected as shown in the following table by using the binary input that was configured for measuring range selection:

Active measuring range	Binary input for measuring range selection
Measuring range 1	0
Measuring range 2	1

Configuration data for measuring ranges 1 and 2

Configuration item	Selection/setting option	Explanation
Compensation	None, TC linear, TC curve, natural waters, natural waters with expanded temperature range, TDS, ASTM neutral, ASTM acidic, ASTM alkaline	Type of temperature compensation
Temperature coefficient	0.0 to 8.0 %/K	**applicable only to "TC linear" and "TDS" compensation** The temperature coefficient is a measure of the temperature dependence of the electrolytic conductivity of a liquid. It is used to compensate for the effect of temperature when measuring the electrolytic conductivity. If it is known, the temperature coefficient can be entered here or, if it is not yet known, determined by the calibration. ⇨ chapter 9.2 "Calibration methods for CR conductivity sensors (conductive)", Page 65
Unit (for calculation)[a]	µS/cm mS/cm **only without TDS:** kΩ×cm MΩ×cm	Unit in which the electrolytic conductivity is displayed when the parameter "Compensation" is set to "TDS" and/or the customer-specific linearization is active, the unit text set in the parameter "Unit" appears in the measured-value display instead of the unit for the electrolytic conductivity. The electrolytic conductivity in µS/cm or mS/cm multiplied by the TDS factor (see below in this table) yields the TDS measured value. The unit for the electrolytic conductivity is selected in the parameter "Unit for calculation" as the basis for the TDS calculation. Because of the text length, the parameter "Unit for calculation" appears only as "Unit" in the configuration of the device.

Configuration item	Selection/setting option	Explanation
Unit[a]	up to 5 text characters	**only for TDS compensation or customer-specific linearization** Unit for the process variable to be displayed for TDS measurements or when using customer-specific linearization (e.g. ppm or mg/l) The unit must be edited with the JUMO DSM software. It is not possible to change texts on the unit.
Offset	-9999 to +9999	Correction value added to measured value
TDS factor	0.01 to 2.00	**only for TDS compensation:** Conversion factor from measured conductivity to display unit (see configuration item "Unit" in this table) for TDS compensation, see configuration item "Compensation" in this table
Linearization table	Yes No	The linearization table for the measuring range concerned can be activated/deactivated with this parameter. Linearization tables for JUMO digiLine CR contain up to 30 value pairs in any measurement characteristic line. Each value pair assigns a display value (Y-column) to a measured value (X-column). A linearization table is available for every measuring range. Linearization tables are created/edited using the JUMO DSM software.

[a] Because of the text length, the parameter "Unit for calculation" appears only as "Unit" in the configuration menu of the device. The parameter "Unit" can only be set with the JUMO DSM software and is not listed in the configuration menu.

12.3.3 Temperature input

Configuration item	Selection/setting option	Explanation
Temperature input function	active inactive	**only device versions with a separate sensor:** Activation of the temperature input
Filter Time Constant	0.0 to 25.0 s	Optimization of measured value updating The larger the value of the filter time constant, the slower is the change in measured value at the output.
Offset	-10 to+10 °C	Correction value added to measured value
Hold input	Inactive Binary input 1 Binary input 2	Selects the binary input for activation/deactivation of the hold function The hold function freezes the measured value (e. g. during maintenance work). The hold function is On-Active (measured value at binary input is held with On signal).
Connection type	2-wire 3-wire	**only device versions with a separate sensor:** Connection variants for the connected resistance thermometer

12.3.4 Binary inputs 1 and 2

Configuration item	Selection/setting option	Explanation
Input type	Potential-free contact Voltage source	Type of digital signal connected **Potential-free contact:** Connection of external potential-free switching contacts **Voltage source:** Connection of an external logic signal 0/24 V
Inversion	Yes No	Switching status inverted or not inverted

12.4 Binary outputs

NOTE!

The binary output settings are visible only on device versions with binary outputs (solid-state relays)!

Configuration item	Selection/setting option	Explanation
Output signal	No function Limit value 1 Limit value 2 Sensor fault Calibration timer Calibration active Service counter	Digital signal source for the output
Inversion	Yes No	Switching status inverted or not inverted
Switching operations limit value	0 to 99999 ×1000	The switching operations of the binary outputs are counted in the device. When the limit value is reached, a service message is shown **on device versions with a display**. Setting 0 = Limit value monitoring inactive
Limit value ON period	0 to 99999 h	The total ON period of the binary outputs is counted in the device. When the limit value is reached, a service message is shown **on device versions with a display**. Setting 0 = Limit value monitoring inactive

12.5 Analog outputs

NOTE!

The analog output settings are only visible on device versions with analog outputs (standard signal of 4 to 20 mA)!

Analog output 1 (measured value of conductivity)

Configuration item	Selection/setting option	Explanation
Hold input	inactive Binary input 1 Binary input 2	Selects the function of the digital input for the analog output **inactive:** No function **Binary input 1:** Binary input 1 controls the hold function **Binary input 2:** Binary input 2 controls the hold function The hold function freezes the analog output value (e. g. during maintenance work). The hold function is On-Active (measured value at binary input is held with On signal).
Response at hold	low (4 mA) high (20 mA) frozen replacement value	Selects the response of the analog output value at hold
Response during calibration	moving frozen replacement value	Selects the response of the analog output value during calibration

Output parameter for measuring ranges 1 to 2

Configuration item	Selection/setting option	Explanation
Scale start measuring range x	0 to < scale end	Measured value for lower limit of measuring range span (measured value at output current of 4 mA)
Scale end measuring range x	> scale start to 9999	Measured value for upper limit of measuring range span (measured value at output current of 20 mA)
Response at error measuring range x	low (4 mA) high (20 mA) Namur low (3.4 mA) Namur high (22 mA) frozen replacement value	Selects the response of the analog output in case of a fault (e. g. overrange) **Note:** In the event of sudden changes in the measured value at the moment an error occurs, the hold value can differ from the true value due to internal latent times!
Replacement value measuring range x	3.4 to 22 mA	Specifies an analog value that the output assumes at hold, at calibration or in case of a fault

Analog output 2 (measured temperature value)

Configuration item	Selection/setting option	Explanation
Hold input	inactive Binary input 1 Binary input 2	Selects the function of the digital input for the analog output **inactive:** No function **Binary input 1:** Binary input 1 controls the hold function **Binary input 2:** Binary input 2 controls the hold function The hold function freezes the analog output value (e. g. during maintenance work). The hold function is On-Active (measured value at binary input is held with On signal).
Scale start for	-50 to < scale end	Measured value for lower limit of measuring range span (measured value at output current of 4 mA)

Configuration item	Selection/setting option	Explanation
Scale end	> scale start to +250 °C	Measured value for upper limit of measuring range span (measured value at output current of 20 mA)
Response at hold	low (4 mA) high (20 mA) frozen replacement value	Selects the response of the analog output value at hold
Response in case of an error	low (4 mA) high (20 mA) Namur low (3.4 mA) Namur high (22 mA) frozen replacement value	Selects the response of the analog output in case of a fault (e. g. overrange) **Note:** In the event of sudden changes in the measured value at the moment an error occurs, the hold value can differ from the true value due to internal latent times!
Replacement value	3.4 to 22 mA	Specifies an analog value that the output assumes at hold, at calibration or in case of a fault
Response during calibration	moving frozen replacement value	Selects the response of the analog output value during calibration

12.6 CIP/SIP

NOTE!

Sensor monitoring requires plant-specific empirical values for the sensor stress caused by process conditions. Configure the sensor monitoring parameters on the basis of these empirical values.

CIP/SIP

Configuration item	Selection/setting option	Explanation
Minimum CIP temperature	-20 to+150 °C	Temperature thresholds for identifying CIP/SIP cycles If the CIP/SIP cycle takes place above one of these values for the set duration of a CIP/SIP cycle, the values identify a successfully completed CIP/SIP cycle and the CIP or SIP counter is incremented. The respective counter is reset only after the value has dropped below the CIP/SIP temperature.
Minimum SIP temperature		
CIP cycle duration	0 to 65535 s	Duration of a CIP/SIP cycle
SIP cycle duration		
CIP/SIP alarming	Inactive Active	Activates/deactivates the CIP/SIP alarm on reaching the maximum number of CIP/SIP cycles
Alarm limit value CIP cycles	0 to 999	Specifies the number of CIP/SIP cycles at which the CIP/SIP alarm and pre-alarm are triggered[a]
Alarm limit value SIP cycles		
Pre-alarm limit value CIP cycles		
Pre-alarm limit value SIP cycles		

[a] The counters for CIP and SIP cycles are automatically incremented by the JUMO digiLine electronics each time a CIP or SIP process is recognized on the basis of the configured CIP/SIP temperatures and duration of the CIP/SIP cycle.

12.7 Limit value monitoring function

Configuration item	Selection/setting option	Explanation
Input signal	Temperature uncomp. Conductivity comp. Conductivity	Signal source of the analog value to be monitored by the limit value monitoring function
Startup alarm suppression	No alarm suppression, time-limited, alarm suppression	Activation of alarm suppression after the device is switched on Limit value alarms are suppressed until the input signal value has left the alarm range for the limit value alarm after the device is switched on.
Startup alarm suppression time	0 to 99999 s	**only if "Startup alarm suppression" set to "time-limited" is valid**: Duration of startup alarm suppression after the device starts
Self-lock mode	off Ackn. if inactive Ackn. always possible	Self-locking acknowledgment mode **Acknowledgment if inactive:** Self-locking of an activated limit value alarm can only be acknowledged if the input signal value is outside the alarm range for the limit value alarm. **Acknowledgment always possible:** Self-locking of an activated limit value alarm can be acknowledged at any time, regardless of the input signal value.
Acknowledging self-locking	Binary input 1 Binary input 2 "Back" operating key	Selects the signal with which an activated limit value alarm can be acknowledged
Signal for Hold	No function Binary input 1 Binary input 2	Digital signal for activating the hold function When the hold function is activated, the alarm assumes the state defined in the "Response at hold" setting.
Behavior during calibration	inactive active frozen normal operation	Specifies the alarm state during calibration **inactive:** alarm suppressed **active:** Alarm forced **hold:** alarm state is maintained regardless of alarm condition changes **Normal operation:** Alarm in acc. with alarm condition

Limit value monitoring settings for measuring ranges 1 to 2

Configuration item	Selection/setting option	Explanation
Alarm type	No function Min. alarm Max. alarm Alarm window Window inverted USP645 alarm Purified water	Selects the alarm types (comparator functions) for monitoring measured values for alarm violations 4 basic mathematical limit value functions and limit value alarms according to USP <645> or European Pharmacopoeia (Ph. Eur.) for purified water ⇨ Characteristic lines of the basic limit value functions in connection with the table
Limit value	**for conductivity** 0 to 9999 **for temperature** -50 to +250 °C	**not for alarm types "USP645 alarm" and "Purified water"** Limit value for the particular alarm type The unit for the measurand selected under "Input signal" applies. The unit from the configuration of the respective measuring range of the input configuration applies in the case of conductivity.
Pre-alarm lim.	0 to 100 %	Pre-alarm limit for alarm types "USP645 alarm" and "Purified water"
Hysteresis	**for conductivity** 0 to 9999 **for temperature** 0 to 250 °C	Spacing between switch-on and switch-off points for the alarm types ⇨ Characteristic lines of the basic limit value functions in connection with the table For alarm types "USP645 alarm" and "Purified water", the unit µS/cm applies. For all other alarm types, the unit for the measurand selected under "Input signal" applies. The unit from the configuration of the respective measuring range of the input configuration applies in the case of conductivity.
Window range	**for conductivity** 0 to 9999 **for temperature** 0 to 250 °C	**only for alarm types "Alarm window" and "Window inverted"** Range of the alarm window ⇨ Characteristic lines of the basic limit value functions in connection with the table The unit for the measurand selected under "Input signal" applies. The unit from the configuration of the respective measuring range of the input configuration applies in the case of conductivity.
Alarm delay On	0 to 9999 s	Time delay between occurrence of the alarm condition and triggering of the alarm
Alarm delay Off	0 to 9999 s	**only without self-locking** Time delay between ending of the alarm condition and clearing of the alarm
Pulse time	0 to 9999 s	**only without self-locking** Time limit for alarm with the wiper time as maximum alarm duration With a setting of 0 s, the wiper function is deactivated.

Configuration item	Selection/setting option	Explanation
Response at hold Response in case of an error	inactive active frozen	Specifies the alarm state while hold function is activated or in the event of a fault **inactive:** alarm suppressed **active:** Alarm forced **hold:** alarm state is maintained regardless of alarm condition changes
Suppression on measuring range change	No alarm suppression, time-limited, alarm suppression	Activates alarm suppression after a measuring range change Limit value alarms are suppressed until the input signal value has left the alarm range for the limit value alarm after the device is switched on.
Suppress. time	0 to 99999 s	**only when "Suppression on measuring range change" is set to "time-limited"**: Duration of startup alarm suppression after a measuring range change

Min. alarm (On-signal when value drops below lower limit)

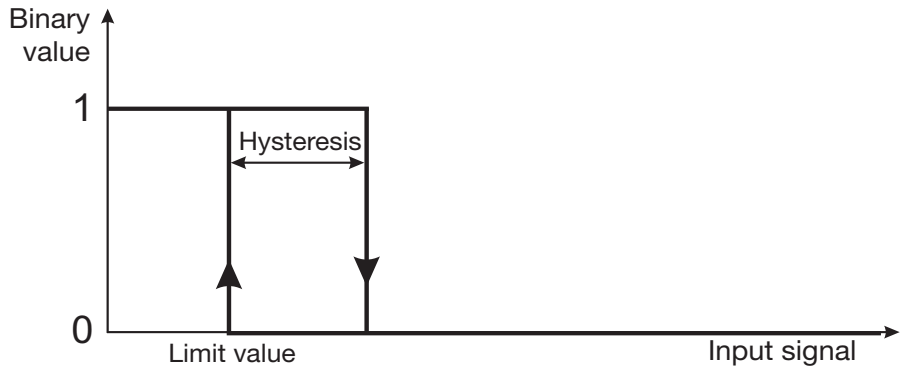

Max. alarm (On-signal when value exceeds upper limit)

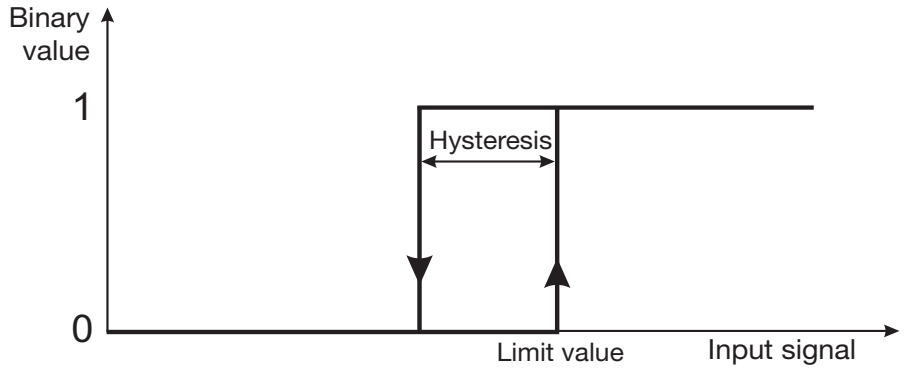

Alarm window (On-signal within a configurable value range)

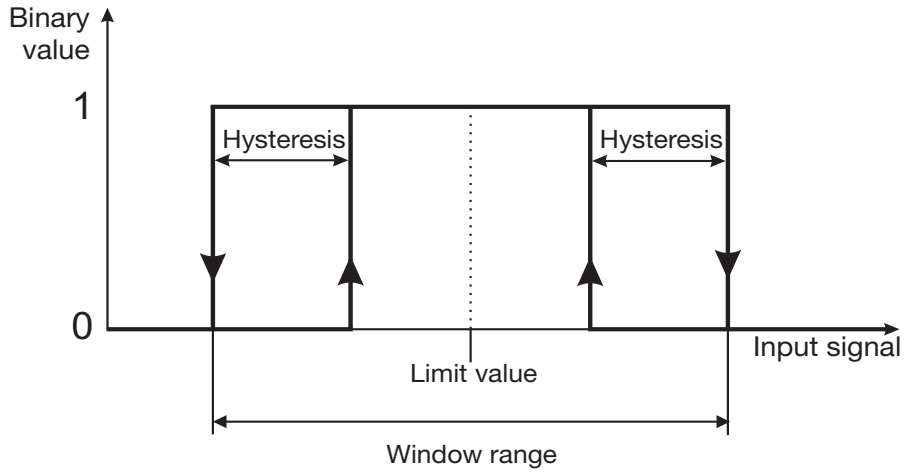

Invert alarm window (On-signal outside a configurable value range)

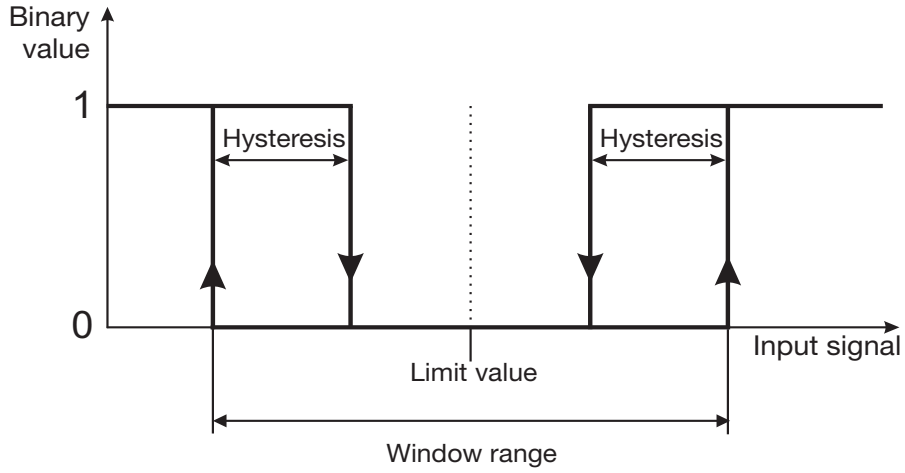

12.8 Calibration timer

Calibration timer

Configuration item	Selection/setting option	Explanation
Calibration interval	0 to 9999 days	Time from one calibration to the next. The time at which a calibration is due is indicated by the calibration alarm on device versions with a display.

12.9 Sensor stress

Configuration item	Selection/setting option	Explanation
Sensor stress	Inactive Active	Activates/deactivates the sensor stress alarm The "Sensor stress" value reflects the current level of stress on the sensor from high temperatures and high conductivity values. The following sensor stress alarm states are signaled on the device display (only on device versions with a display) on reaching the specified limit values: • Pre-alarm for sensor stress above sensor stress level 3 • Alarm for sensor stress above sensor stress level 7

12.10 Alarm buzzer (only on device version with binary outputs)

Configuration item	Selection/setting option	Explanation
1st alarm source	No alarm Limit value 1 Limit value 2 Sensor fault Counter outputs	Select up to 3 alarm sources for the alarm buzzer
2nd alarm source	No alarm Limit value 1 Limit value 2 Sensor fault Counter outputs	
3rd alarm source	No alarm Limit value 1 Limit value 2 Sensor fault Counter outputs	
Alarm dur.	Until acknowledged Time-limited	Specifies the alarm duration When set to "time-limited", the alarm tone last 1 second.
Acknow. source	Binary input 1 Binary input 2 "Back" operating key	Selects the signal source for alarm buzzer acknowledgment with setting of "Until acknowledged" in alarm duration

12.11 Display

General information

Configuration item	Selection/setting option	Explanation
Key lock	Noe Binary input 1 Binary input 2	Selects the signal source for locking the keyboard If so desired, the operating keys can be locked by the binary input signals. A key symbol appears on the device display when locked.

Configuration item	Selection/setting option	Explanation
Language	German English French Spanish	Selects the operating language for the JUMO digiLine CR As an alternative to manual configuration, the language setting can also be accessed by pressing the "OK" operating key for a longer period of time (see "Language selections on device versions with display", Page 63).
Automatic logoff time	0 to 15 min.	The automatic logoff time can be set here. The logged-in user is logged off as soon as no key has been pressed on the device during the set time. If the automatic logoff time is set to the value 0 s, then automatic logoff is inactive. The user then remains logged in until he logs off again or the device is restarted. ⇨ chapter 7.2.1 "Log-on/Log-out", Page 59
Display type	Standard display Large display Bargraph	In the normal and large display, 2 values are shown on the display in the measuring mode (main and secondary value). In the bargraph display, the main value is shown as a numerical value at the center in the measuring mode and visualized underneath as a bargraph display. In contrast to the normal and large display, the secondary value is not shown in this case. The value range of the main value for the bargraph can be set (see next table). The compensated conductivity is the main value and the temperature is the secondary value in the default setting. However, this setting can also be changed to meet your requirements (see further below in this table).
Temperature Unit	°C °F	Temperature unit setting for the device
Sign. main value	No signal Temperature input Compensation temp. Uncomp. conductivity Compens. Conductivity	Signal source for the main value display In the measuring mode, the main value is shown on the display as the central value (upper display value). The appearance of the display can be set in the display type (higher up in this table).
Sig. sec. value	No signal Temperature input Compensation temp. Uncomp. conductivity Compens. Conductivity	Signal source for the secondary value display In the measuring mode, the secondary value is shown on the display as an additional value accompanying the main value (below the main value). The appearance of the display can be set in the display type (higher up in this table).

Measuring ranges 1 to 2

Configuration item	Selection/setting option	Explanation
Bargraph start	0 to < bargraph end	Measured value of main value at start of the bargraph display
Bargraph end	> bargraph start up to 9999	Measured value of main value at end of the bargraph display
Decimal place	XXXX XXX.x XX.xx X.xxx	Number of desired decimal places The number of decimal places can be set from 0 to 3.

13.1 Cleaning

The front of devices with plastic housings (front foil) can be cleaned with standard detergents, rinsing and cleaning agents.



CAUTION!

The front of devices with plastic housings is not resistant to aggressive acids and lyes or scouring agents.

Use of these media can cause damage to devices with plastic housing.

▶ Only clean the front of devices with plastic housing with suitable agents.

13.2 Sensor replacement on device versions with a separate sensor



NOTE!

Sensor replacement is not possible on JUMO digiLine electronics in device versions as a head transmitter. Here, replacement of the entire module with sensor and electronics is required.

Replacement of the sensor with retention of the JUMO digiLine electronics

On device versions with a separate sensor, the sensor can be disconnected from the JUMO digiLine electronics. If the sensor needs to be replaced, the JUMO digiLine electronics can be connected to a new sensor and re-inserted. The "Sensor replacement function" must be used in this case to reset the corresponding data in the JUMO digiLine electronics and increment the "sensor counter".

⇨ JUMO DSM software operating manual

13 Operation, maintenance and care

14.1 Analog outputs 4 to 20 mA

Signal range	4 to 20 mA
Maximum load resistance	≤ 500 Ω
Accuracy	0.25 %
Ambient temperature influence	0.08 % / 10 K

14.2 Binary outputs

Typ	Solid state relay PhotoMOS®
Ampacity	200 mA
Max. voltage	DC 30 V, AC 30 V

14.3 Analog inputs (sensor connection)

Input for temperature sensor

Measuring range	
Pt100	-50 to +250 °C
Pt1000	-50 to +250 °C
Connection types	2-wire/3-wire
Measuring accuracy	±0.25 % of MR[a]
Ambient temperature influence	0.1 % / 10 K
Sampling rate	500 ms

[a] MR: measuring range span

Input for CR conductivity sensor

Units	µS/cm mS/cm kΩ × cm MΩ × cm
Display ranges[a]	0.000 to 9.999 00.00 to 99.99 000.0 to 999.9 0000 to 9999
Temperature compensation	TK linear[b] for -50 to +250 °C and over 0.045 µS/cm TC curve[b] for -20 to +150 °C and over 0.055 µS/cm TDS[c] for -50 to +250 °C Natural water DIN EN 27888 for 0 to 36 °C Natural water with expanded range for 0 to 100 °C ASTM D1125-95 neutral impurities for 0 to 100 °C and over 0.045 µS/cm ASTM D1125-95 alkali and acid impurities for 0 to 100 °C and over 0.055 µS/cm

14 Technical data

Measuring accuracy	
0 to 20 µS	±(0.5 % of the MRE[d] + 0.3 µS) × cell constant
0 to 100 µS	±(0.6 % of the MRE[d] + 0.3 µS) × cell constant
0 to 1000 µS	±(0.6 % of the MRE[d] + 0.3 µS) × cell constant
0 to 10 mS	±(0.6 % of the MRE[d] + 0.3 µS) × cell constant
0 to 100 mS	±(0.6 % of the MRE[d] + 0.3 µS) × cell constant
0 to 1000 mS	±1 % of the MRE[d]
Cell constant	0.01 to 10 cm^{-1}
Measuring range selection	2 configurable measuring ranges
Ambient temperature influence	0.2 % / 10 K
Sampling rate	500 ms

[a] The measuring/display range is scalable. The decimal place is user configurable.

[b] TC: temperature coefficient

[c] TDS (**T**otal **D**issolved **S**olids)

[d] MRE: Measuring range end value

14.4 Binary inputs

Signal type	**Switching thresholds**	
	On	**Off**
Potential-free contact	< 800 Ω	> 1.5 kΩ
Logic input (external voltage supply max. DC 28 V)	> 6 V	< 5 V

14.5 Electrical data

Device versions with analog or binary outputs

Voltage supply[a]	DC 24 V ±25 %
Power/current consumption	≤ 4 W
Electromagnetic compatibility (EMC)	
for all device versions	DIN EN 61326-1
for head transmitters only	DIN EN 61326-2-3
Interference emission	Class B[b]
Interference immunity	Industrial requirements
Protection rating	Protection rating III

[a] The voltage supply for the JUMO digiLine electronics must be provided with SELV or PELV and must meet the requirements for energy-limited electrical circuits to DIN EN 61010-1.

The power supply current must be limited to 2 A. If the voltage supply allows higher current consumption, a fuse must be provided.

[b] The product is suitable for industrial use as well as for households and small businesses.

14.6 Case

Plastic housing material	Plastic (ABS)
Stainless steel case material	1.4301
Protection type	IP66, IP67, IP69K
Operating position	any, with due consideration for the viewing angle of the display

14.7 Environmental influences

14.7.1 Device version as head transmitter

Ambient temperature	-20 to +60 °C
Storage temperature	-25 to +80 °C
Site altitude	Max. 2000 m (6562 ft) above sea level
Shock resistance	DIN EN 60654-3
Acceleration	40 m/s^2
Dur.	Duration 5 ms
Vibration resistance for device versions with **plastic housing**	IEC 61298-3
Frequency range	10 to 1000 Hz
Amplitude	0.35 mm
Acceleration	50 m/s^2
Vibration resistance for device versions with **stainless steel case**	IEC 61298-3
Frequency range	10 to 1000 Hz
Amplitude	0.15 mm
Acceleration	20 m/s^2

Resistance to climatic conditions	Climate class 4K4H to EN 60721-3-4 Relative humidity ≤ 100 % condensing

14.7.2 Device version with separate sensor

Ambient temperature	-20 to +60 °C
Storage temperature	-25 to +80 °C
Site altitude	Max. 2000 m (6562 ft) above sea level
Shock resistance	DIN EN 60654-3
Acceleration	40 m/s^2
Dur.	Duration 5 ms
Vibration resistance	IEC 61298-3
Frequency range	10 to 150 Hz
Amplitude	0.75 mm
Acceleration	2 m/s^2
Resistance to climatic conditions	Climate class 4K4H to EN 60721-3-4 Relative humidity ≤ 100 % condensing

14.8 Approvals

14.8.1 Head transmitter (202763...)

GOST	
Test facility	-
Certificate/test no.	Approval submitted
Inspection basis	IEC 60079-0, IEC 60079-1
Valid for	-
EAC	
Test facility	RU
Certificate/test no.	Approval submitted
Inspection basis	IEC 60079-0, IEC 60079-1
Valid for	-

14.8.2 Devices for separate sensors (202762)

c UL us	
Test facility	Underwriters Laboratories
Certificate/test no.	E201387
Inspection basis	UL 61010-1 (3rd Edition), CAN/CSA-C22.2 No. 61010-1-12 (3rd Edition)
Valid for	All versions with plastic housing
GOST	
Test facility	-
Certificate/test no.	Approval submitted
Inspection basis	IEC 60079-0, IEC 60079-1
Valid for	-
EAC	
Test facility	RU
Certificate/test no.	Approval submitted
Inspection basis	IEC 60079-0, IEC 60079-1
Valid for	-

14.9 Sensor properties in head transmitters

The technical data for each of the sensors for the individual device versions, which are combined with the head transmitter, must be obtained from their data sheets. The relevant sensor types for the individual device versions of the JUMO digiLine CR can be obtained from the following table.

JUMO digiLine CR device versions	Sensor data sheet
202763	202922
202764	202923
202765	202924 (data for sensor 202924/10 are relevant)
202766	202924 (data for sensor 202924/20 are relevant)
202767	202924 (data for sensors 202924/30 and 202924/31 are relevant)
202768	202925
202769	202930
202781	202928



CAUTION!

In the case of head transmitters, heat emitted from the system can exceed the admissible ambient temperature of the head transmitter.

Make sure that the head transmitter used is operated within the limits of its technical data.

▶ Observe the specifications on the data sheet! It may be necessary to select a device version with a separate sensor and mount the transmitter at an adequate distance from the heat source.

14 Technical data

15.1 China RoHS

	JUMO More than sensors + automation				
产品组别 Product group: 202760 – 202769	产品中有害物质的名称及含量 China EEP Hazardous Substances Information				
部件名称 Component Name					
	铅 (Pb)	汞 (Hg)	镉 (Cd)	六价铬 (Cr(VI))	多溴联苯 (PBB)	多溴二苯醚 (PBDE)
外壳 Housing (Gehäuse)	X	○	○	○	○	○
过程连接 Process connection (Prozessanschluss)	○	○	○	○	○	○
螺母 Nuts (Mutter)	○	○	○	○	○	○
螺栓 Screw (Schraube)	○	○	○	○	○	○

本表格依据SJ/T 11364的规定编制。
This table is prepared in accordance with the provisions SJ/T 11364.
○：表示该有害物质在该部件所有均质材料中的含量均在GB/T 26572规定的限量要求以下。
Indicate the hazardous substances in all homogeneous materials' for the part is below the limit of the GB/T 26572.

×：表示该有害物质至少在该部件的某一均质材料中的含量超出GB/T 26572规定的限量要求。
Indicate the hazardous substances in at least one homogeneous materials' of the part is exceeded the limit of the GB/T 26572.

15 Annex

JUMO GmbH & Co. KG
Street address:
Moritz-Juchheim-Straße 1
36039 Fulda, Germany
Delivery address:
Mackenrodtstraße 14
36039 Fulda, Germany
Postal address:
36035 Fulda, Germany
Phone: +49 661 6003-0
Fax: +49 661 6003-607
Email: mail@jumo.net
Internet: www.jumo.net

JUMO UK LTD
JUMO House
Temple Bank, Riverway
Harlow, Essex, CM20 2DY, UK
Phone: +44 1279 63 55 33
Fax: +44 1279 62 50 29
Email: sales@jumo.co.uk
Internet: www.jumo.co.uk

JUMO Process Control, Inc.
6724 Joy Road
East Syracuse, NY 13057, USA
Phone: +1 315 437 5866
Fax: +1 315 437 5860
Email: info.us@jumo.net
Internet: www.jumousa.com