JUMO digiLine Ci

Intelligent electronics with RS485 interface for connecting inductive conductivity sensors to JUMO digiLine systems



Operating Manual

20276110T90Z001K000

V3.00/EN/00691388/2024-02-20

Table of contents

1 Safety information 7

1.1 Safety signs 7
1.1.1 Warning symbols 7
1.1.2 Note symbols 7
1.2 Intended use 8
1.3 Qualification of personnel 8

2 Acceptance of goods, storage, and transport 9

2.1 Checking the delivery 9
2.2 Important information about storage and transport 9
2.3 Returning goods 9
2.3.1 Accompanying letter for repair 9
2.3.2 Decontamination Statement 9
2.3.3 Protection against electrostatic discharge 10
2.4 Disposal 10

3 Device Description 11

3.1 Introduction 11
3.2 Block diagram 11
3.3 Device setup 12
3.4 Description 15

4 Identifying the device version 17

4.1 Order details 17
4.1.1 Head transmitter (202761) 17
4.1.2 Devices for separate sensor (202760) 19
4.2 Accessories 20

5 Mounting 21

5.1 Mounting site and climatic conditions 21
5.2 Dimensions of device versions with separate sensor 21
5.2.1 Device versions with plastic housing 21
5.2.2 Device versions with stainless steel case 23
5.3 Dimensions of head transmitter 25
5.4 Mounting devices with a separate sensor 28
5.4.1 JUMO digiLine Ci with plastic housing 28
5.4.2 JUMO digiLine Ci with stainless steel case 30
5.5 Mounting of head transmitters 31

Table of contents

6 Electrical connection 33

6.1 Installation notes 33
6.2 Connection diagram 34
6.2.1 Functional ground connection for device versions with stainless steel case 35
6.2.2 Galvanic isolation 36
6.2.3 Connection examples 37

7 Operation 41

7.1 General Information 41
7.2 Device menu 42
7.2.1 Log-on/Log-out 43
7.2.2 User level 43
7.2.3 Calibration 44
7.2.4 Device information 44
7.2.5 Service 44

8 Startup 45

8.1 Functional test 46

9 Calibration 47

9.1 General information 47
9.2 Calibration methods for Ci conductivity sensors (inductive) 47
9.3 Calibration default settings 49
9.4 Calibration of the JUMO digiLine Ci with RS485 interface 49
9.5 Calibration via local operation in device versions with a display 49
9.6 Calibration values 51
9.7 Calibration logbook 53
9.8 Evaluation criteria for calibration 53

10 Ci base calibration 55

11 Troubleshooting in the event of faults 57

12 Data overview 59

12.1 General Information 59
12.2 Sensor data 59
12.3 Process values 60
12.4 Operating data 61
12.5 Calibration data 62

Table of contents

13 Configuration 63

13.1 General Information 63
13.2 Important information 63
13.3 Input 63
13.3.1 Ci input (inductive conductivity) 63
13.3.2 Measuring ranges 1 to 4 for the Ci input 64
13.3.3 Temperature input 65
13.4 CIP/SIP 66
13.5 Digital interface 66
13.6 Calibration timer 67
13.7 Sensor stress 68
13.8 Display 68

14 Operation, maintenance and care 71

14.1 Cleaning 71
14.2 Sensor replacement on device versions with a separate sensor 71
14.2.1 Sensor replacement while the digiLine mode is active 72
14.2.2 Sensor replacement while the Modbus mode is active 72

15 Technical data 73

15.1 RS485 interface for JUMO digiLine or Modbus RTU 73
15.2 Analog inputs (sensor connection side) 73
15.3 Electrical data 75
15.4 Case 75
15.5 Environmental influences 75
15.5.1 Device version as head transmitter 75
15.5.2 Device version with separate sensor 76
15.6 Approvals 77
15.6.1 Head transmitter (202761) 77
15.6.2 Devices for separate sensor (202760) 77
15.7 Sensor properties in head transmitters 78

16 Annex 79

16.1 China RoHS 79

Table of contents

1.1 Safety signs

1.1.1 Warning symbols



DANGER!

This symbol indicates that **personal injury from electrocution** may occur if the appropriate precautionary measures are not taken.



WARNING!

This symbol in connection with the signal word indicates that **personal injury** may occur if the respective precautionary measures are not carried out.



CAUTION!

This symbol in connection with the signal word indicates that **material damage or data loss** will occur if the respective precautionary measures are not taken.



CAUTION!

This symbol indicates that **components could be destroyed** by electrostatic discharge (ESD = Electro Static Discharge) if the respective cautionary measures are not taken.

Only use the ESD packages intended for this purpose to return device inserts, assembly groups, or assembly components.



READ THE DOCUMENTATION!

This symbol, which is attached to the device, indicates that the associated **documentation for the device** must be **observed**. This is necessary to identify the nature of the potential hazard, and to take measures to prevent it.

1.1.2 Note symbols



NOTE!

This symbol refers to **important information** about the product, its handling, or additional benefits.



REFERENCE!

This symbol refers to **additional information** in other sections, chapters, or other manuals.



FURTHER INFORMATION!

This symbol is used in tables and indicates that **further information** is provided after the table.



DISPOSAL!

At the end of its service life, the device and any batteries present do not belong in the trash! Please ensure that they are **disposed of** properly and in an **environmentally friendly** manner.

1 Safety information

1.2 Intended use

The device described in these instructions is used to measure analytical process variables in liquids in an industrial environment as specified in the technical data. Other uses beyond those defined are not viewed as intended uses.

The device is built according to the relevant standards and directives as well as to the applicable safety regulations. Nevertheless, improper use, incorrect installation or configuration can result is erroneous measurements. Depending on the plant, this may cause unwanted control actions (e. g. overmetering) in the plant. Personal injury and property damage must be prevent through appropriate safety measures and safety devices provided by the customer.

To avoid danger, only use the device:

- for the intended use
- when in good order and condition
- In compliance with these instructions



WARNING!

Error during installation, mounting, or configuration of JUMO sensors with digiLine electronics can disrupt proper execution of the downstream process or cause damage.

▶ For this reason, it is always necessary to provide safety devices that are independent of the device and to allow settings to be made only by technical personnel.



CAUTION!

JUMO sensors with digiLine electronics must be calibrated correctly to prevent measurement errors.

1.3 Qualification of personnel

This manual contains the necessary information for the intended use of the device described therein.

It is intended for technically qualified personnel who have received special training or have the appropriate knowledge in the field of automation technology (measuring and control technology).

Understanding and technically correct observance of the safety instructions and warnings contained in this manual are prerequisites for safe mounting, installation, and startup as well as safety during operation of the described device. Only qualified individuals have the required technical knowledge to interpret and put into practice the safety instructions and warnings used in this manual in any given situation.

2 Acceptance of goods, storage, and transport

2.1 Checking the delivery

- On delivery, ensure that the packaging and its contents are undamaged.
- Check the delivery for completeness against the packing slip and order confirmation.

Proceed as follows if external transport damage is visible:

- Do not accept the delivery or only conditionally.
- Note the extent of damage on the transport documents or on the delivery note of the freight forwarder.
- File a complaint.

2.2 Important information about storage and transport

- Store the device in a dry, clean environment. Observe the admissible environmental influences (see chapter 15 "Technical data", Page 73).
- Protect the device from shock during transport. The original packaging offers optimal protection.

2.3 Returning goods

If repairs are needed, return the device in clean condition and in its entirety.

Use the original packaging when returning the device.

2.3.1 Accompanying letter for repair

Please include the completed accompanying letter for repair when returning goods. Do not forget to state the following:

- Description of the application
- Description of the error that has occurred

The letter of transmittal accompanying product returns can be downloaded on the Internet at www.jumo.de under Services > Repair service.

2.3.2 Decontamination Statement

As a certified company and in compliance with legal requirements, JUMO is required to handle all incoming products that come into contact with liquids in compliance with statutory regulations.

Before returning a device for repair or calibration:

- Remove all adhering residues of the substance measured.
  Pay special attention to grooves for seals and cracks where residues of the material being measured may adhere. This is especially important when the material being measured is a hazardous substance.

A returned device can only be accepted if the information regarding protection against contamination has been completed correctly on the letter of transmittal accompanying the product returned. If the device has come into contact with hazardous substances, state this and attach the appropriate safety data sheets to the letter of transmittal.

2.3.3 Protection against electrostatic discharge

(ESD = **e**lectro **s**tatic **d**ischarge)

To prevent damage from ESD, electronic assemblies, or components with a high internal resistance must be handled, packaged, and stored in an environment that protects against ESD. Measures that protect against electrostatic discharge and electric fields are described in DIN EN 61 340-5-1 and DIN EN 61 340-5-2 "Electrostatics – Part 5-2 – Protection of electronic devices from electrostatic phenomena".

If you are returning electronic assemblies or components for repair:

- Pack sensitive components only in an environment providing protection against ESD. Workspaces such as this divert electrostatic charges to ground in a controlled manner and prevent static charges due to friction.
- Use only packaging intended specifically for ESD-sensitive assemblies/components. These must consist of conductive plastics.

Keep in mind that the manufacturer assumes no liability for damage caused by ESD.



CAUTION!

Electrostatic charges occur in non-ESD-protected environments.

Electrostatic discharges can damage modules or components.

▶ For transport purposes, use only the ESD packaging provided.

2.4 Disposal



- Do not dispose of the device or replaced parts in the trash after use.
- Delete programs and data stored on the device.
- Remove batteries, if any, if this can be done without damaging the device.
- Dispose of the device and the packaging material in a responsible and environmentally friendly manner.
- Observe the country-specific laws and regulations for waste treatment and disposal.

In accordance with Directive 2012/19/EU on Waste from Electrical and Electronic Equipment, manufacturers are obliged to offer the option of returning waste equipment. Request the return from the manufacturer.

3.1 Introduction

General

The JUMO digiLine Ci in the version with an RS485 interface as a 5-pole M12 plug connector for connecting to a JUMO digiLine system. The device versions with an RS485 interface are used in the JUMO digiLine mode with plug & play support on the JUMO AQUIS touch S/P or in the Modbus mode on the JUMO mTRON T or variTRON. Several sensors simultaneously transfer their measurement data to a master continuously over the JUMO digiLine bus.

Installation and connection

The JUMO digiLine Ci with RS485 interface is available in two device versions in terms of design type:

- **Device version as head transmitter:** JUMO digiLine electronics and sensor form an integrated module. The module is installed in a suitable fitting.
- **Device version with separate sensor:** JUMO digiLine electronics and sensor are separate modules and are connected to one another by a cable. The sensor is installed in a suitable fitting. The JUMO digiLine electronics are mounted in the vicinity of the sensor using the supplied wall/pipe/DIN rail holder.

If it becomes necessary to replace the sensor due to a defect or wear, in device versions with a separate sensor, the JUMO digiLine electronic components can be disconnected from the sensor and the intact components reused. In the device version as head transmitter, disconnecting the sensor from the JUMO digiLine electronics is not possible. The connection with the bus is established easily and quickly by attaching (plug in and screw on) a preassembled cable (available from JUMO).

Configuration, parameterization and calibration

The JUMO digiLine Ci with RS485 interface is normally configured, parameterized and calibrated on the JUMO AQUIS touch S/P. The calibration, however, also be conveniently carried out in the laboratory on a PC using the JUMO DSM-Software (**D**igital **S**ensor **M**anagement software). It is only necessary to connect the device to the PC via its USB interface.

3.2 Block diagram

NOTE!

The USB interface and the RS485 interface of the JUMO digiLine Ci cannot be operated simultaneously. If the device is operated via the USB interface on the PC, the RS485 interface is inactive. The USB interface as priority.

JUMO digiLine Ci with RS485 interface (JUMO digiLine and Modbus)

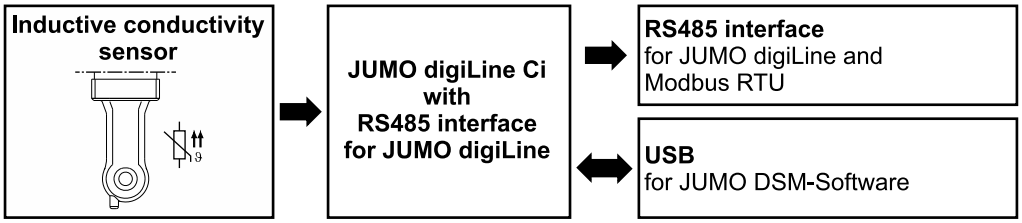

3 Device Description

3.3 Device setup

JUMO digiLine electronic components with plastic housing for separate Ci sensors

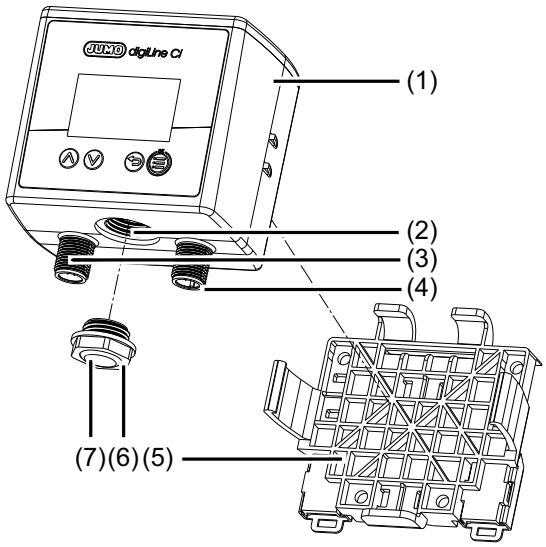

1) JUMO digiLine electronics for Ci sensors
2) Housing opening for USB interface and status LED
3) M12 plug connector, 8-pole for sensor connection
4) M12 plug connector for interface connection
5) Holder for wall, pipe and DIN rail mounting
6) Transparent threaded coupling for housing opening
7) Venting element (embedded in threaded coupling)

JUMO digiLine Ci head transmitter with plastic housing

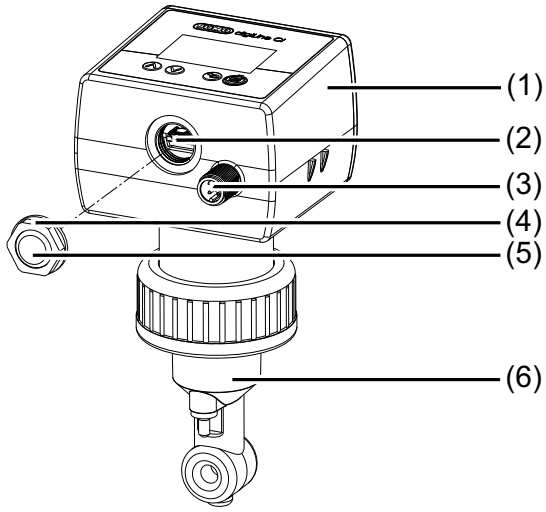

1) JUMO digiLine electronics for Ci sensors
2) Housing opening for USB interface and status LED
3) M12 plug connector for interface connection
4) Transparent threaded coupling for housing opening
5) Venting element (embedded in threaded coupling)
6) Ci sensor

JUMO digiLine electronic components with stainless steel case for separate Ci sensors

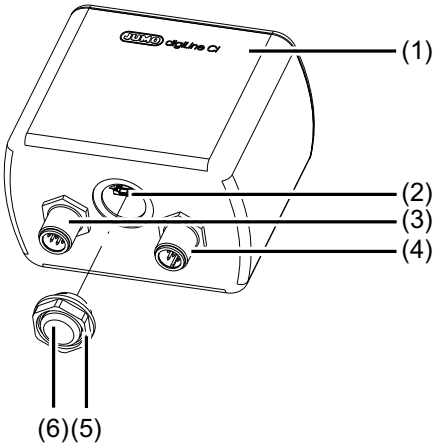

1) JUMO digiLine electronics for Ci sensors
2) Housing opening for USB interface and status LED
3) M12 plug connector, 8-pole for sensor connection
4) M12 plug connector for interface connection
5) Transparent threaded coupling for housing opening
6) Venting element (embedded in threaded coupling)

JUMO digiLine Ci head transmitter with stainless steel case

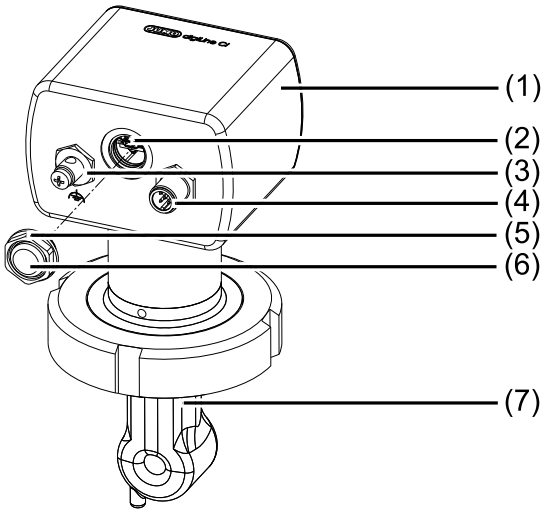

1) JUMO digiLine electronics for Ci sensors
2) Housing opening for USB interface and status LED
3) Functional ground
4) M12 plug connector for interface connection
5) Transparent threaded coupling for housing opening
6) Venting element (embedded in threaded coupling)
7) Ci sensor

3 Device Description

Display and control elements of the JUMO digiLine Ci

Device version with display and membrane keyboard in plastic housing

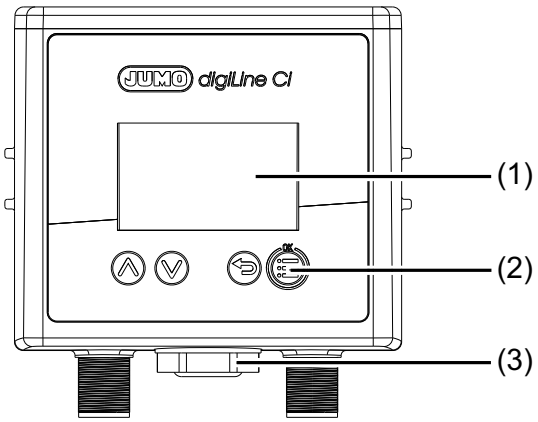

1) Display
2) Operating keys
3) Status display via transparent housing threaded coupling with internal status LED

The status is always indicated via the display (1) and – depending on the the date of manufacturing of the device – additionally via the internal status LED (3).

Device version without display or membrane keyboard in plastic housing

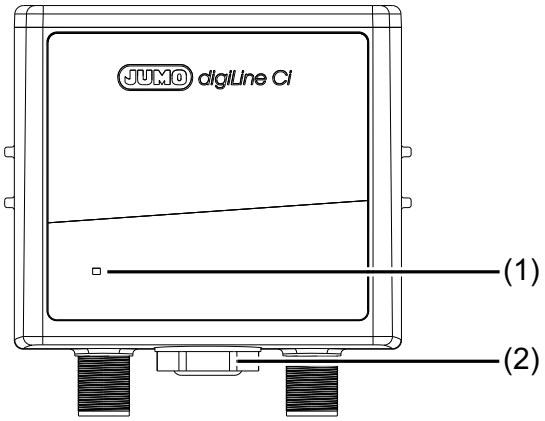

1) Status indication via status LED
2) Status display via transparent housing threaded coupling with internal status LED

Depending on the date of manufacture of the device, the status is displayed either via the status LED (1) on the front or the internal status LED (2).

Device version without display or membrane keyboard in stainless steel case

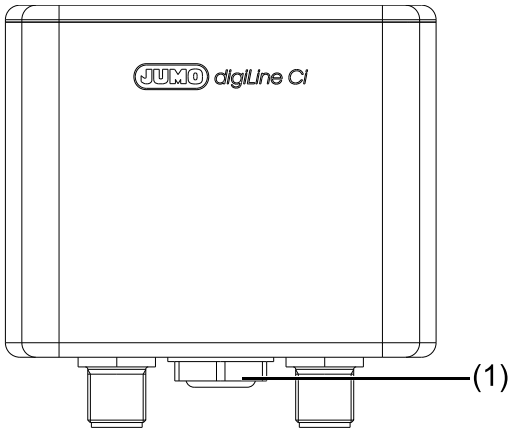

1) Status display via transparent housing threaded coupling with internal status LED

3.4 Description

Device version RS485 interface for JUMO digiLine and Modbus RTU

This interface is used to connect to the JUMO digiLine bus system of the JUMO AQUIS touch S/P or to a JUMO mTRON T or variTRON with Modbus interface.
The plug & play support for the JUMO digiLine electronics simplifies sensor startup considerably. After the JUMO AQUIS touch S/P is connected, the JUMO digiLine electronic components are configured automatically and ready for use immediately.
As an alternative to JUMO digiLine operation with plug & play support on the JUMO AQUIS touch S/P, Modbus operation (Modbus-RTU) on the JUMO mTRON T or variTRON with access to the measured data is also possible. In this case, the JUMO digiLine electronics are configured and calibrated on the PC (USB interface) via the JUMO DSM software.

Temperature compensation

Temperature compensation is handled by the digiLine electronics. When JUMO sensors with an integrated temperature probe are used, the JUMO digiLine electronics can obtain the temperature compensation directly from the sensor. Alternatively, the compensation temperature can be transferred from the digiLine master or a fixed temperature can be specified in the configuration of the JUMO digiLine electronics.

Calibration

Calibration can be performed either in the field on the JUMO AQUIS touch S/P or, if available, via the operating panel of the JUMO digiLine electronic components. It is also possible to calibrate at a lab workstation using the JUMO DSM software. The calibration data are saved in the JUMO digiLine electronics of the sensor. The sensor calibration can therefore be performed ahead of commissioning, so that the sensor with its JUMO digiLine electronics can then simply be mounted on the system. This reduces the plant downtime to a minimum when it becomes necessary to replace the sensor.

Calibration timer

The JUMO digiLine electronics has a calibration timer which, after a set calibration interval has lapsed, is able to trigger a reminder for the sensor calibration due for the relative cell constant on the master. The calibration interval setting can be edited via the configuration menu of the JUMO AQUIS touch S/P or using the JUMO DSM software. After each sensor calibration, the calibration interval is restarted.

The calibration timer is not active for calibrations of a temperature coefficient and temperature coefficient curve.

Calibration logbook

The JUMO digiLine electronics contain a calibration logbook in which the last 10 calibration operations are saved with the date, time, and calibration values. This logbook provides an overview of the calibration history of the sensor. The calibration logbook can be read-out either at the JUMO AQUIS touch S/P or using the JUMO DSM software on the PC. There is no limit to the number of saved calibration logbook entries for JUMO digiLine electronics in the JUMO DSM software.

Sensor information

Numerous data such as type information, operating data, information on measuring point identification etc. are stored in the JUMO digiLine electronics. This information allows clear identification and optimal management of each sensor. All these data can be viewed on the JUMO AQUIS touch S/P or using the JUMO DSM software.

Sensor monitoring

To monitor the stress on the sensor from sensor cleaning, counters are implemented for CIP and SIP cycles. CIP and SIP cycles are recognized automatically on the basis of the criteria specified in the configuration for sensor monitoring. The counters for the CIP and SIP cycles each retain the number of cleaning processes performed. The counter readings can be displayed on the JUMO AQUIS touch S/P

in order to assess the wear status of the sensor. Upon reaching a configured counter reading, an alarm is signaled on the JUMO digiLine master device and, if present, on the local display of the JUMO digiLine Ci. After a sensor has been replaced, the counters are reset with the JUMO DSM software.

Sensor stress

To assess the stress on the sensor from the thermal, the current "sensor stress" is calculated on the basis of the measurement data provided by the sensor. In the JUMO digiLine electronic components, a sensor stress alarm signal can be configured. If a critical sensor stress level is reached, this signals a sensor stress alarm on the master device and, where available, on the display of the JUMO digiLine electronic components.

Customer-specific characteristic lines

For each measuring range, a linearization table with up to 30 value pairs each can be activated in the JUMO digiLine electronic components. These show the measured electrolytic conductance to any unit (e.g. a concentration value derived from the conductance). The JUMO digiLine linearization tables Ci can be used during operation without a master device to provide customer-specific linearization of the measured value on the local display on device versions with a display. The linearization tables of the JUMO digiLine electronic components are deactivated for operation on the JUMO AQUIS touch S/P. The customer-specific linearization of the JUMO AQUIS touch S/P is available and should be used.

JUMO Digital Sensor Management Software for the PC

The JUMO DSM software (DSM stands for **D**igital **S**ensor **M**anagement) can be used to manage, calibrate, and test JUMO digiLine electronics on the PC. In addition, it serves as a configuration tool for the JUMO digiLine electronics. The connection to the PC is made via the USB interface. The JUMO DSM software adds data from the memory of JUMO digiLine electronics to its sensor database. The sensor database holds calibration logbook entries, histories about replaced sensors and configuration changes to the JUMO digiLine electronics. If the JUMO digiLine electronics are to be connected to a new sensor (device versions with a separate sensor only), data for the new sensor can be reset via the JUMO DSM software and the information from the old sensor archived on the PC.

4.1 Order details

4.1.1 Head transmitter (202761)

	(1)	**Basic type**
202761		JUMO digiLine Ci HT10 (head transmitter)
	(2)	Basic type extension
10		Digital operation, plastic housing (JUMO digiLine)
15		Digital operation, metal case (JUMO digiLine)
20		Analog operation, plastic housing (with analog outputs)
25		Analog operation, metal case (with analog outputs)
40		Digital operation, plastic housing (IO-Link)
45		Digital operation, metal case (IO-Link)
50		Analog operation, plastic housing (with solid-state relays)
55		Analog operation, metal case (with solid state relay)
	(3)	Display
00		without display
10		With display
	(4)	Version
8		Standard with default settings
9		Customer-specific configuration (specification in plain text)
	(5)	Language
01		German
02		English
03		French
	(6)	Sensor type
10		Ci-PEEK
20		Ci-S-PVDF[a]
30		Ci-ecoLine-PP
40		Ci-ecoLine-PVDF

4 Identifying the device version

	(7)	Process connection
107		Screw connection G 1 1/4
108		Screw connection G 1 1/2
110		Screw connection G 2
168		Union nut G 1 1/2, PVC
169		Union nut G 1 1/2 CrNi
175		Union nut G 1 1/2 PP
606		Taper socket with union nut DN 40 DIN 11851 (dairy pipe fitting)
607		Taper socket with union nut DN 50 DIN 11851 (dairy pipe fitting)
608		Taper socket with union nut DN 65 DIN 11851 (dairy pipe fitting)
609		Taper socket with union nut DN 80 DIN 11851 (dairy pipe fitting)
616		Clamping socket (clamp) DN 50 DIN 32676 (2" ISO 2852)
617		Clamping socket (clamp) 2 1/2" similar to DIN 32676
686		VARIVENT connection DN 50 / 40
690		SMS DN 2
	(8)	Extra codes
000		No extra code
061		UL approval[bc]
062		DNV approval[c]
268		Temperature probe, internal

[a] For the time being, can be ordered only with external temperature sensor

[b] The approval stipulates use of the device indoors only.

[c] List of device versions with UL approval: ⇨ Technical data > Approvals and approval marks.

	(1)		**(2)**		**(3)**		**(4)**		**(5)**		**(6)**	
Order code		/		-		-		-		-		-
Order example	202761	/	10	-	10	-	8	-	01	-	10	-

	(7)		**(8)**		
Order code		/		,	...[a]
Order example	168	/	000	,	

[a] List extra codes in sequence, separated by commas

4.1.2 Devices for separate sensor (202760)

	(1)	**Basic type**
202760		JUMO digiLine Ci ST10 (for separate sensor)
	(2)	**Basic type extension**
10		Digital operation, plastic housing (JUMO digiLine)
15		Digital operation, metal case (JUMO digiLine)
20		Analog operation, plastic housing (with analog outputs)
25		Analog operation, metal case (with analog outputs)
40		Digital operation, plastic housing (IO-Link)
45		Digital operation, metal case (IO-Link)
50		Analog operation, plastic housing (with solid-state relays)
55		Analog operation, metal case (with solid state relay)
	(3)	**Display**
00		Without display
10		With display
	(4)	**Version**
8		Standard with default settings
9		Customer-specific configuration (specification in plain text)
	(5)	**Language**
01		German
02		English
03		French
	(6)	**Extra codes**
000		Without extra code
061		UL approval[ab]

[a] The approval stipulates use of the device indoors only.

[b] List of device versions with approval: ⇨ Technical data > Approvals and test marks.

	(1)		**(2)**		**(3)**		**(4)**		**(5)**		**(6)**
Order code		/		-		-		-		-	
Order example	202760	/	10	-	10	-	8	-	01	-	061

4 Identifying the device version

4.2 Accessories

The following accessories are **not** UL-approved.

Type	Part no.
JUMO M12 digiLine master connecting cable[a], 5-pole, A-coded, length 10 m	00638341
JUMO M12-digiLine master connecting cable[a] 5-pole, A-coded 5 m long	00638337
JUMO M12-digiLine master connecting cable[a] 5-pole, A-coded 1.5 m long	00638333
JUMO M12 connecting cable five-pole 15 m	00638324
JUMO M12 connecting cable five-pole 10 m	00638322
JUMO M12 connecting cable five-pole 5 m	00638315
JUMO M12 connecting cable five-pole 1.5 m	00638313
JUMO M12 connecting cable five-pole 0.5 m	00638312
JUMO Y-splitter 5-pole	00638327
JUMO digiLine hub	00646871
JUMO power supply unit for JUMO digiLine hub	00661597
JUMO M12 terminating connector	00461591
JUMO DSM software (**D**igital **S**ensor **M**anagement)	00655787
M12 cable socket, 8-pole	00444312
M12 cable socket, 8-pole, shielded	00486503
Pipe-mounted kit for device versions with stainless steel case	00515128

[a] For connection to masters with screw or spring-cage terminals; prepare one end of the cable with a 5-pole M12 socket and the other end with ferrules.

5.1 Mounting site and climatic conditions

The installation site should be, as far as possible, free from vibration. Electromagnetic fields, caused by equipment such as motors and transformers, should be avoided. The ambient temperature at the mounting site and the relative humidity must correspond to the technical data. Aggressive gases and vapors have a negative effect on the operating life of the device.

5.2 Dimensions of device versions with separate sensor

5.2.1 Device versions with plastic housing

Abmessungen JUMO digiLine-Elektronik

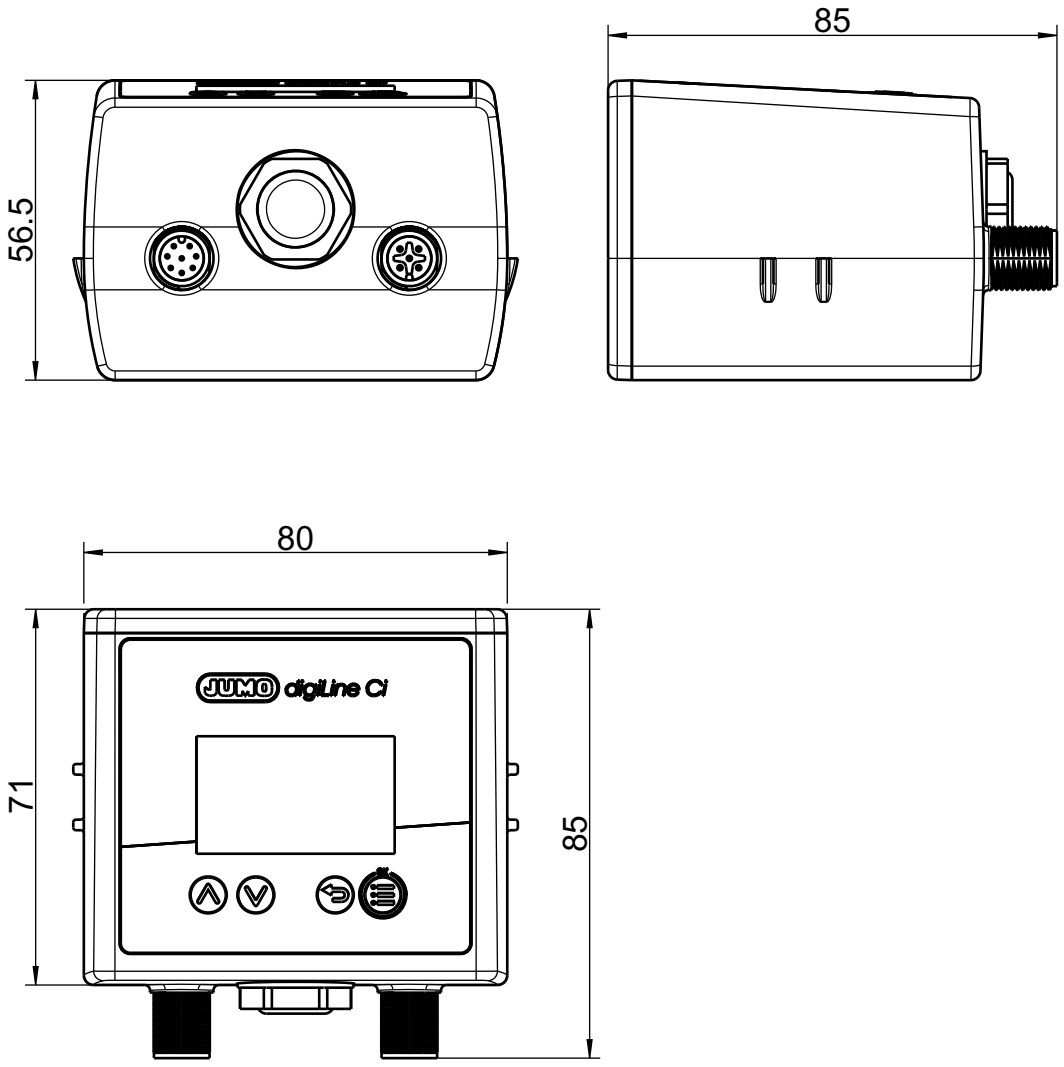

5 Mounting

Dimensions of the mounting plate for wall, pipe and DIN rail mounting

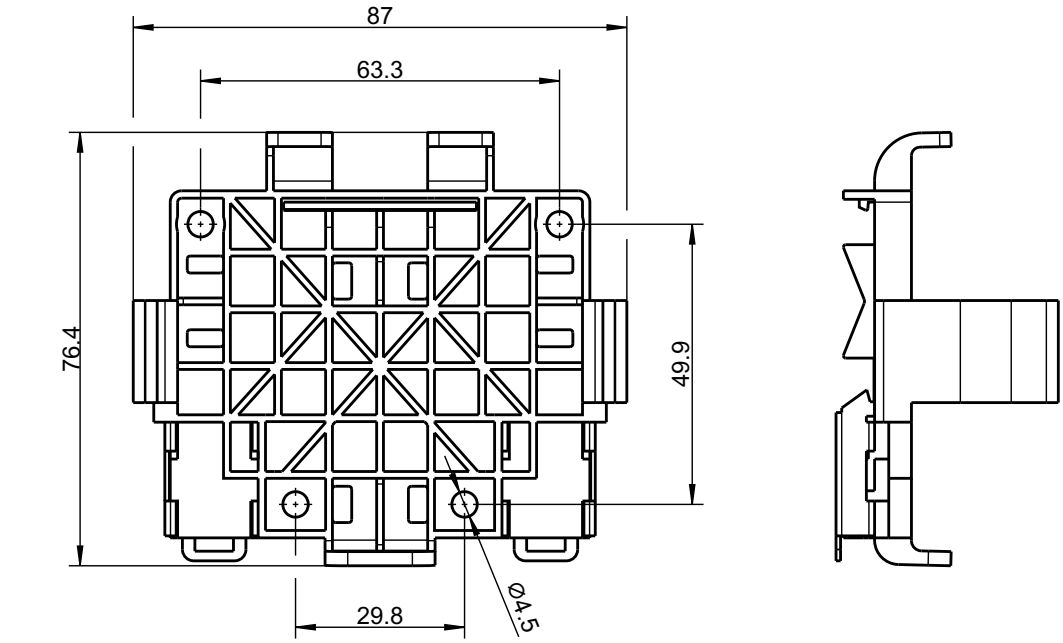

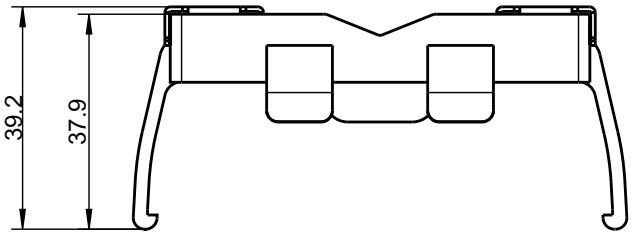

5.2.2 Device versions with stainless steel case

Dimensions of the JUMO digiLine electronic components

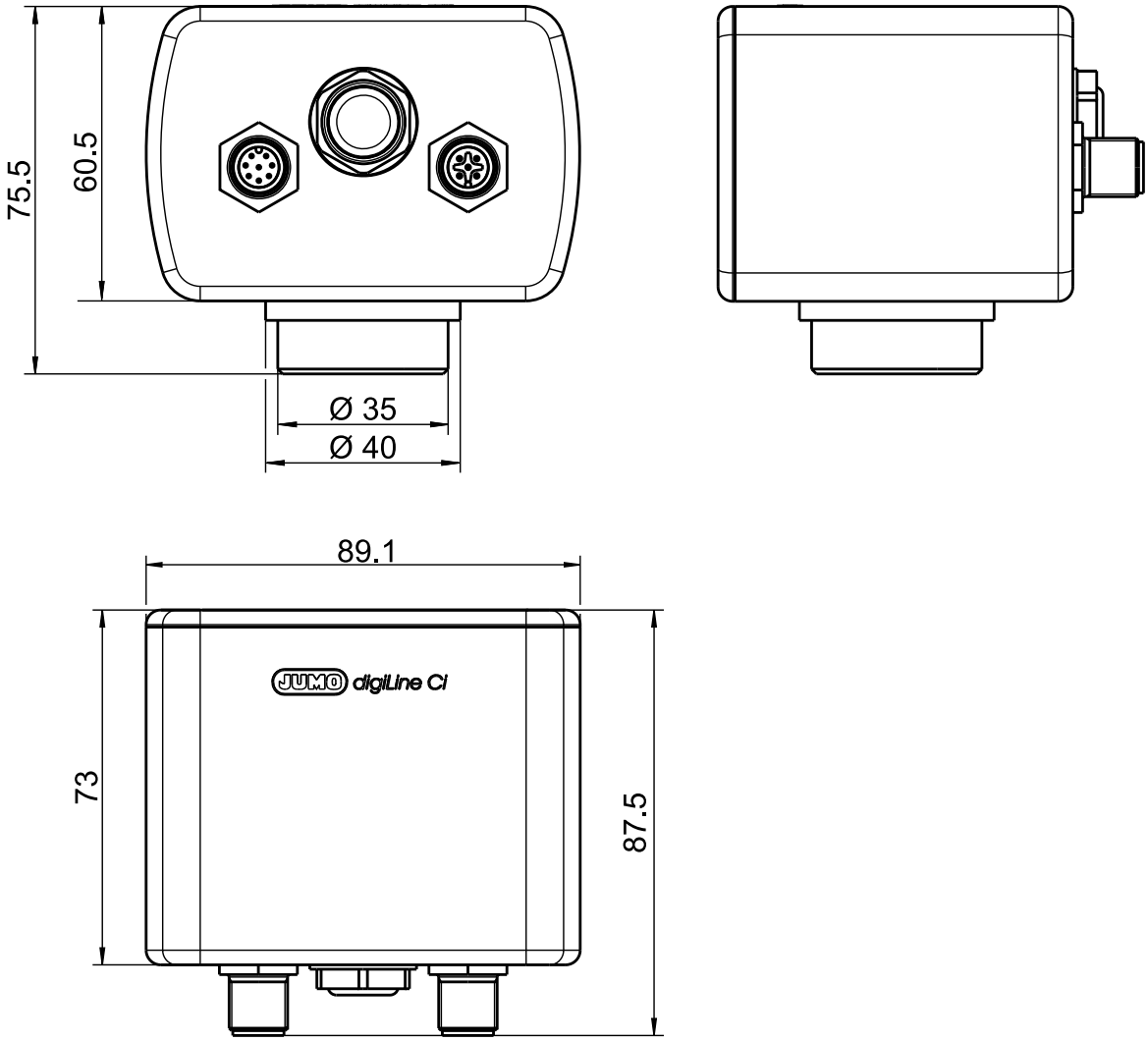

5 Mounting

Mounting plate dimensions

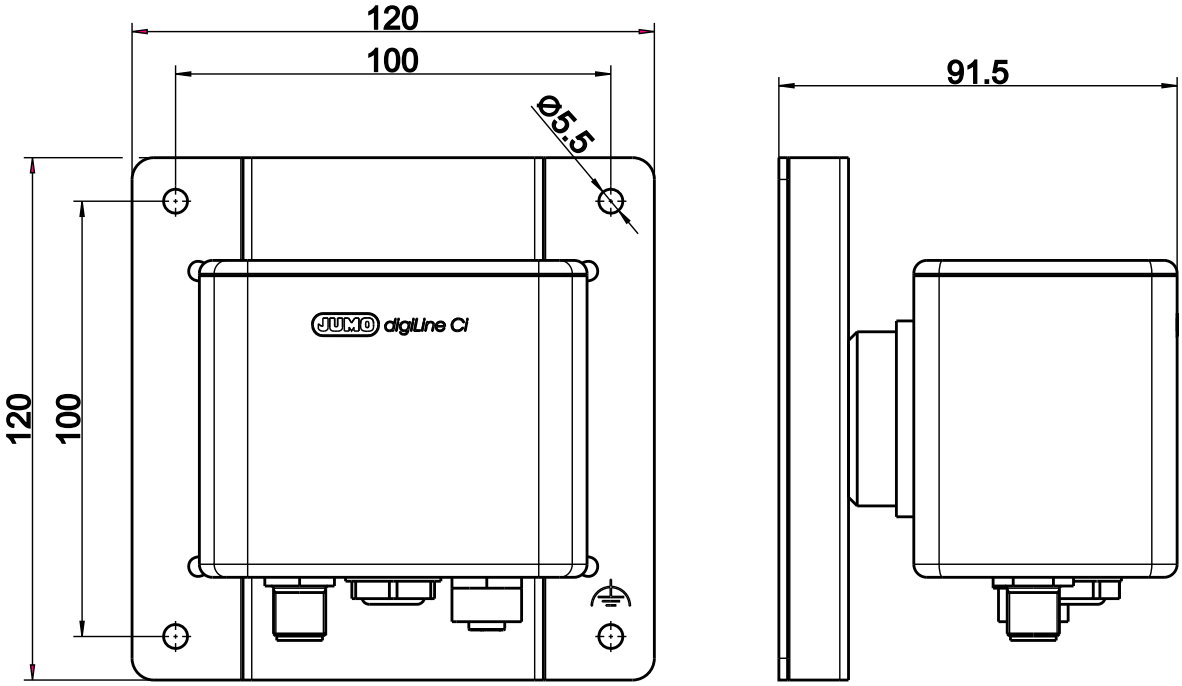

5.3 Dimensions of head transmitter

Dimensions of the JUMO digiLine electronics with digital interfaces

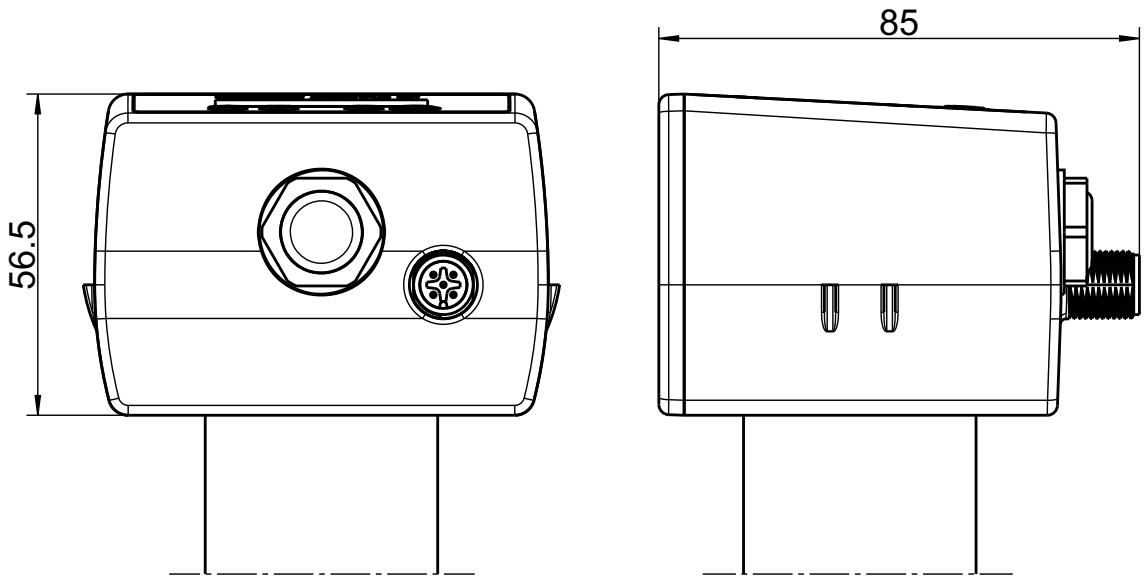

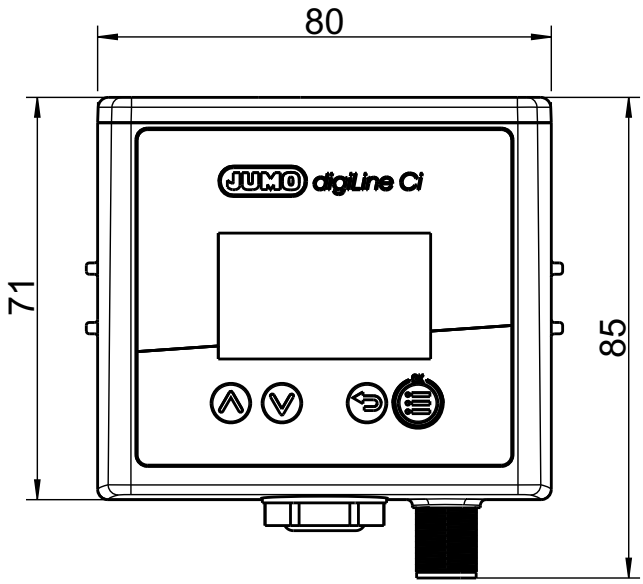

Dimensions of the JUMO digiLine electronic components with stainless steel case and digital in-

terfaces

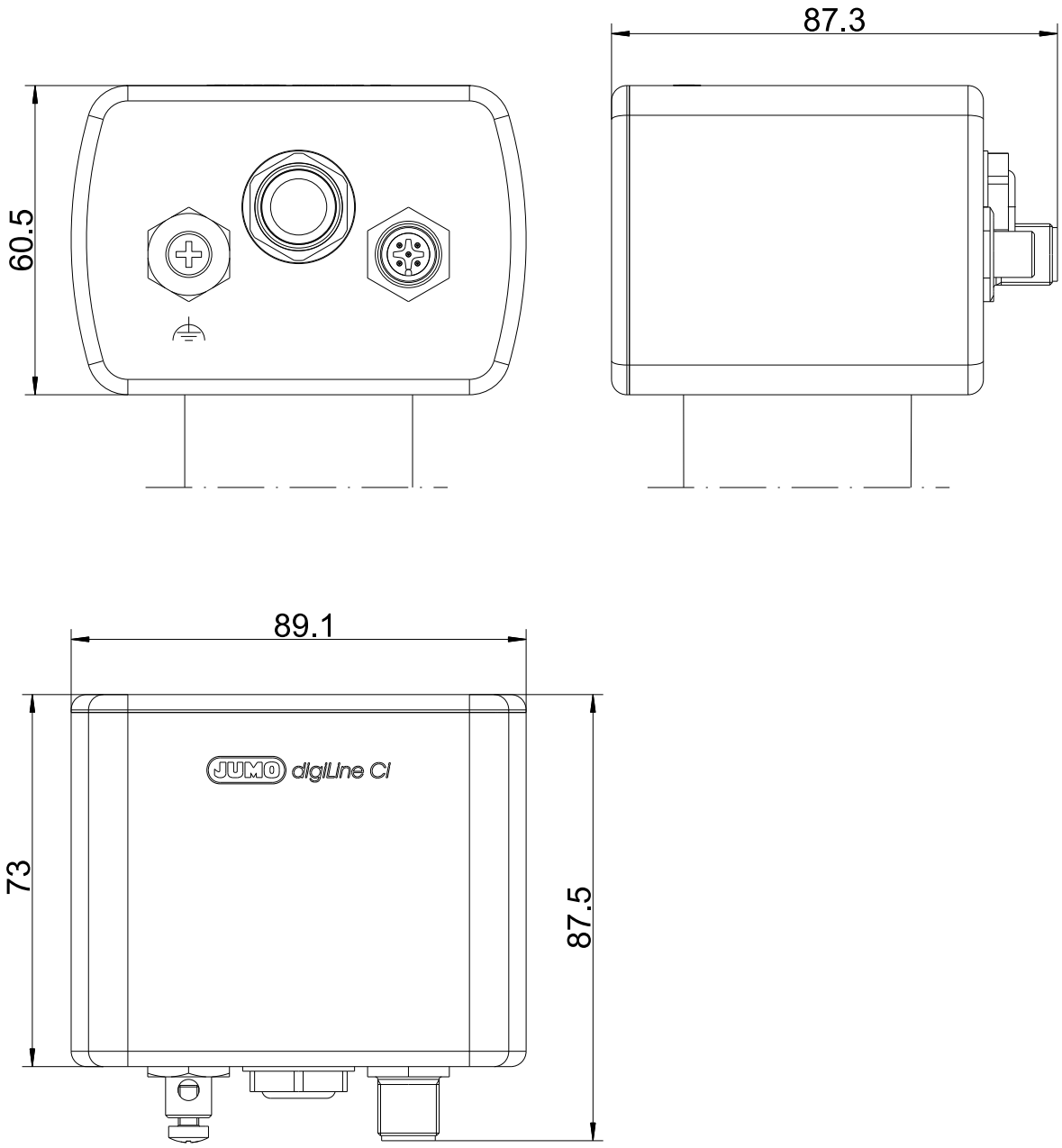

The following dimensional drawings show head transmitters with plastic housing as an example. The dimensions specified apply for all available device versions with plastic housing and stainless steel case.

JUMO digiLine Ci head transmitter Process connection 168: For insertion in T-pieces, with union nut G1 1/2, P Sensor type 30	JUMO digiLine Ci head transmitter Process connection 607: Taper socket with union nut DN 50 DIN 11851 Sensor type 10
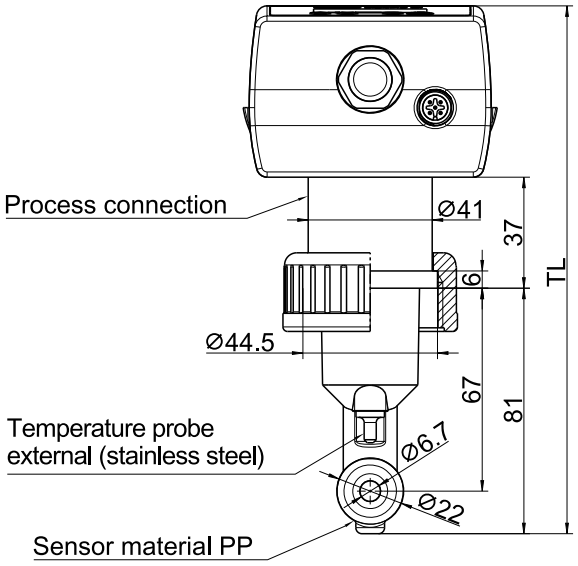	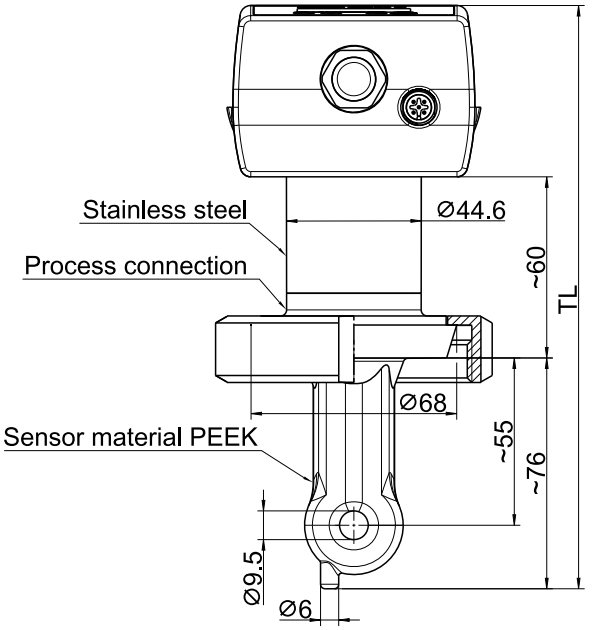
Plastic housing: TL = 174.5 Stainless steel case: TL = 178.5	Plastic housing: TL = 193 Stainless steel case: TL = 197

5 Mounting

5.4 Mounting devices with a separate sensor

5.4.1 JUMO digiLine Ci with plastic housing

Wall mounting

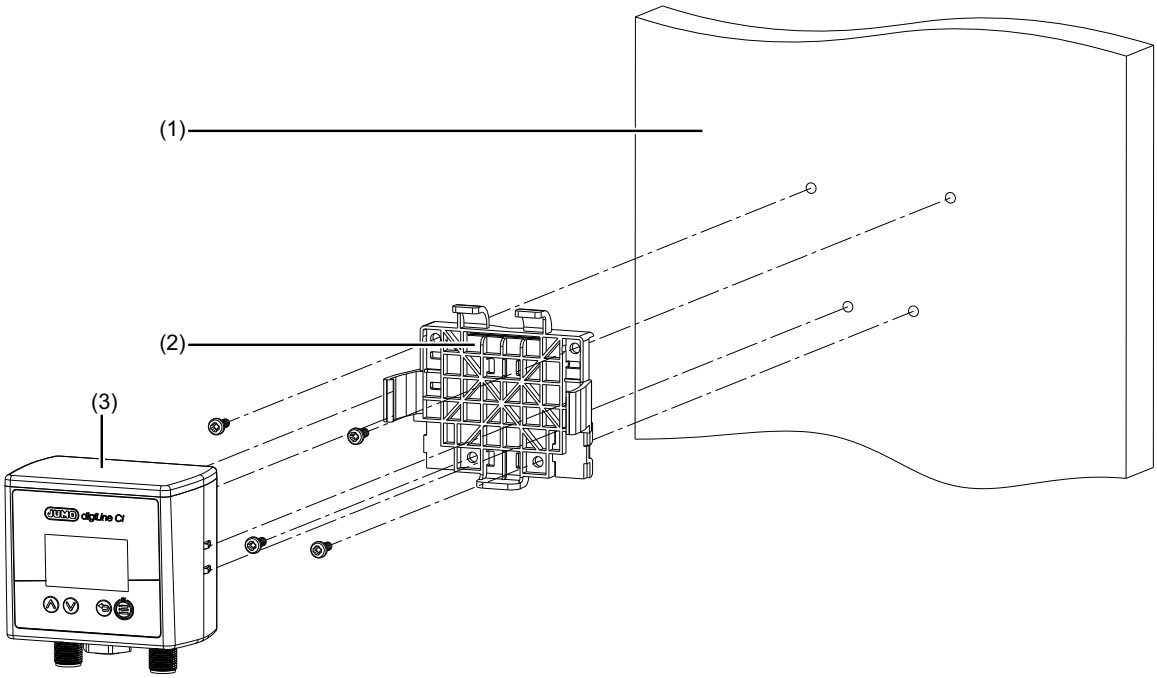

1 Wall/mounting surface
2 Mounting plate included in the scope of delivery of the JUMO digiLine Ci
3 JUMO digiLine Ci

DIN-rail mounting

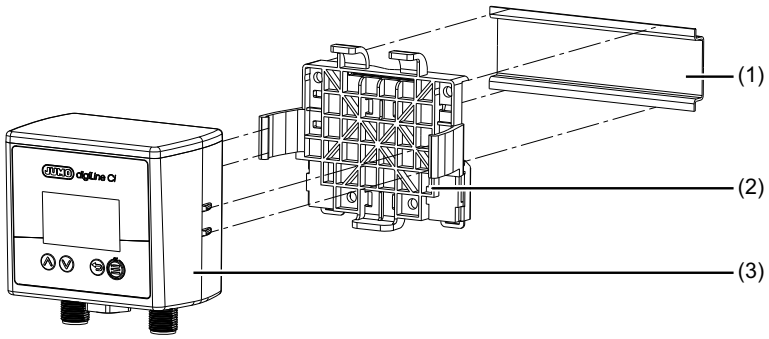

1 DIN-rail
2 Mounting plate included in the scope of delivery of the JUMO digiLine Ci
3 JUMO digiLine Ci

Pipe mounting

When used in conjunction with cable ties, the mounting plate allows mounting of the device on horizontal and vertical pipes or masts.

This type of device installation has not been tested for UL-compliant applications and is therefore not permitted!

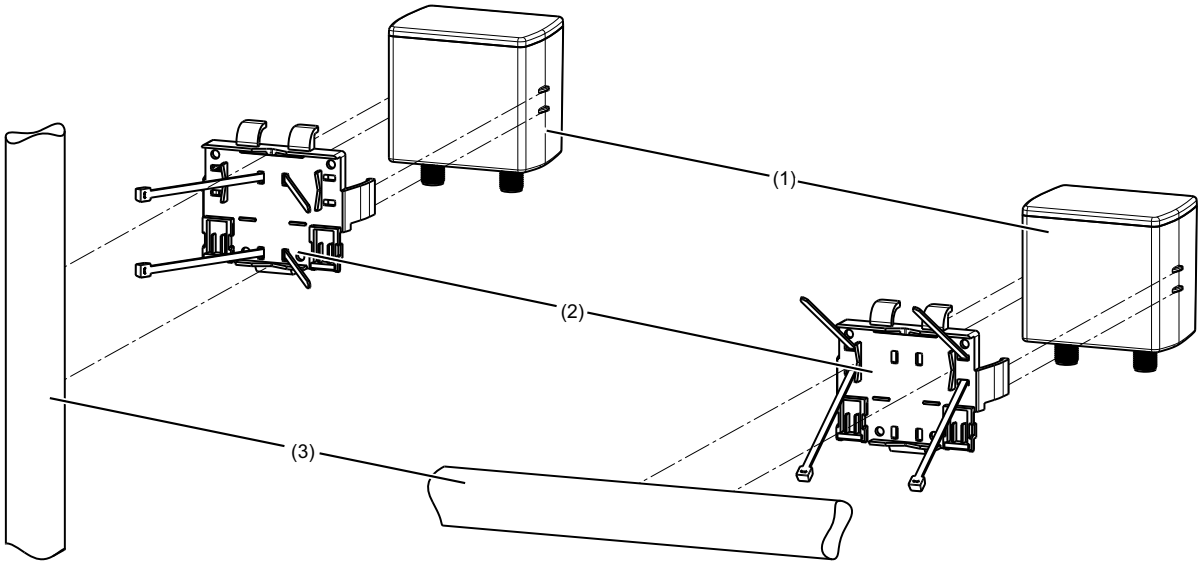

1 JUMO digiLine Ci
2 Mounting plate from the scope of delivery of the JUMO digiLine Ci with installed cable ties
3 Pipe/mast (at customer's site); cable ties are not included in the scope of delivery of the device.

5.4.2 JUMO digiLine Ci with stainless steel case

Wall mounting

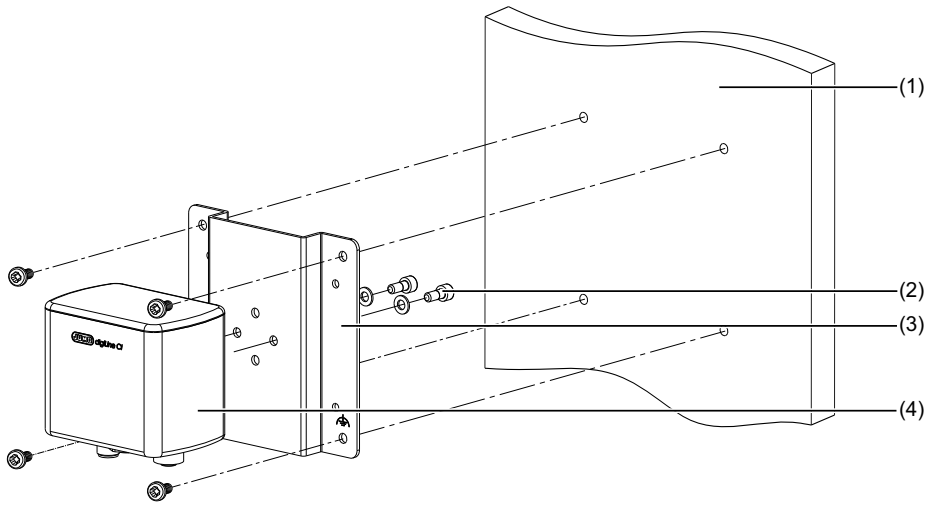

1 Wall/mounting surface
2 Screws and washers from the scope of delivery of the JUMO digiLine Ci
3 Mounting plate included in the scope of delivery of the JUMO digiLine Ci
4 JUMO digiLine Ci

Pipe mounting

The pipe-mounted kit is available as an accessory and is suitable for mounting the device on horizontal or vertical pipes or masts.

chapter 4.2 "Accessories", Page 20

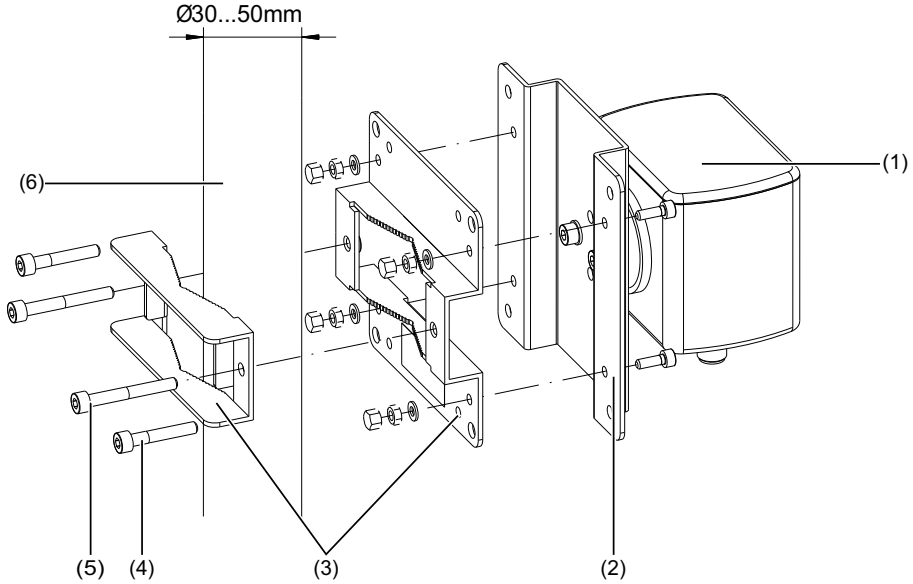

1 JUMO digiLine Ci
2 Mounting plate included in the scope of delivery of the JUMO digiLine Ci
3 Pipe-mounted kit (see accessories)
4 Screws M5 × 30 for pipe diameters of 30 to 40 mm (included in the scope of delivery of the pipe-mounted kit)
5 Screws M5 × 40 for pipe diameters of 40 to 50 mm (included in the scope of delivery of the pipe-mounted kit)
6 Pipe/mast (customer provision)

5.5 Mounting of head transmitters

JUMO digiLine Ci Head transmitters are installed in suitable fittings, process connections or holders that accommodate the corresponding sensor type for your device. Given the variety of different sensor types available in conjunction with the JUMO digiLine Ci as head transmitter, there is a corresponding variety of mounting possibilities. Please refer to the operating manual for the specific conductivity sensor to mount the various sensor types. You can determine the sensor type for your device from the order code on the nameplate and the order details in this operating manual. The operating manuals for the sensor type appropriate for your device can be found on the JUMO website using the product group number in the order details.

⇨ chapter 4 "Identifying the device version", Page 17

5 Mounting

6.1 Installation notes



CAUTION!

Disconnecting the JUMO digiLine bus line and/or removing the terminating resistors and terminating connectors during operation will disrupt the digiLine bus.

Possible consequences include bus disruptions with loss of the measured values from the sensor on the bus affected.

▶ Before the bus cabling is changed, it is necessary to take measures that ensure safe operation of the system if sensors fail on the JUMO digiLine bus.



CAUTION!

The JUMO digiLine and IO-Link systems operate with different voltages and connection assignments on the M12 sockets for the interface connection.

If a device is connected to an interface not intended for it, the device may be damaged.

▶ Make sure that devices are connected only to interface types for which they are intended!

6 Electrical connection

6.2 Connection diagram

General information

The line connections of JUMO sensors with JUMO digiLine electronics are, with few exceptions, made using preassembled bus connecting cables. The union nuts on the cable connecting sockets are tightened to a maximum torque of 0.5 Nm. The pin assignment shown here is intended primarily to provide an overview and serve as an aid when troubleshooting.

Wiring work is required when connecting to the serial interface of a JUMO AQUIS touch S/P or JUMO mTRON T with the JUMO M12-digiLine master connecting cable
⇨ chapter 4.2 "Accessories", Page 20

five-pole M12 plug connector for RS485 (JUMO digiLine or Modbus RTU)

Pin	Potential	Symbol
1	+5 V	Plug connection 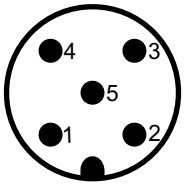
2	+ 24 V	
3	GND	
4	RS485 RxD/TxD-	
5	RS485 RxD/TxD+	
The connection to the serial interface of a master with screw or spring-cage terminals is made with the aid of the JUMO digiLine device connection cable (see Accessories)		

6.2.1 Functional ground connection for device versions with stainless steel case

Device version with separate sensor

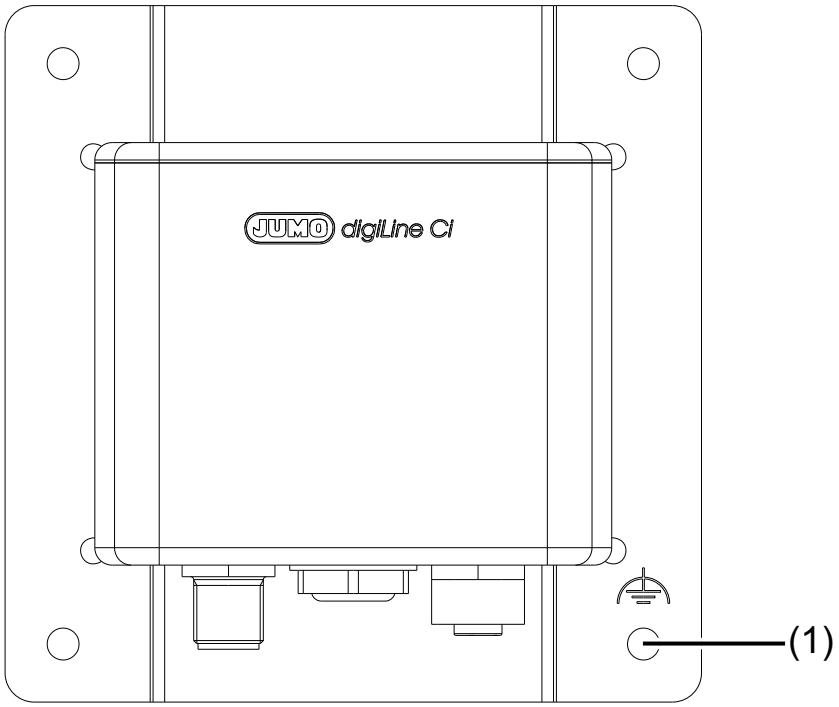

1 Functional ground connection (via fastening screw at the mounting plate)

Head transmitters

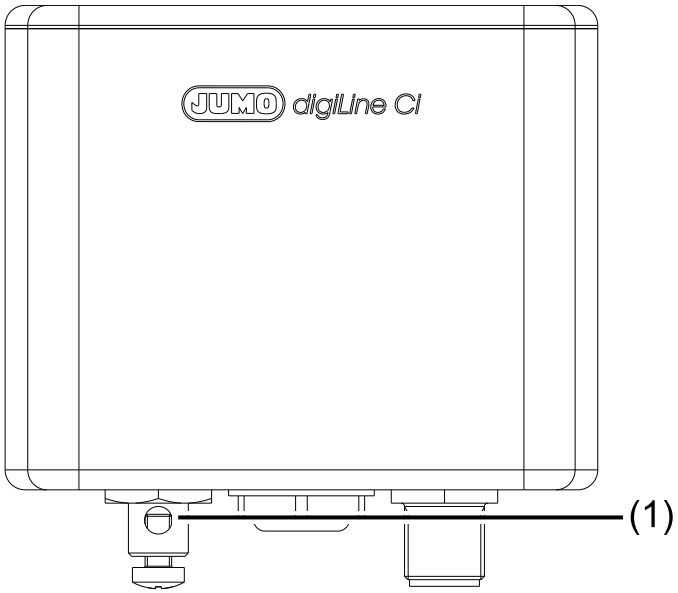

1 Functional earth terminal

6.2.2 Galvanic isolation

JUMO digiLine Ci with RS485 interface (JUMO digiLine and Modbus)

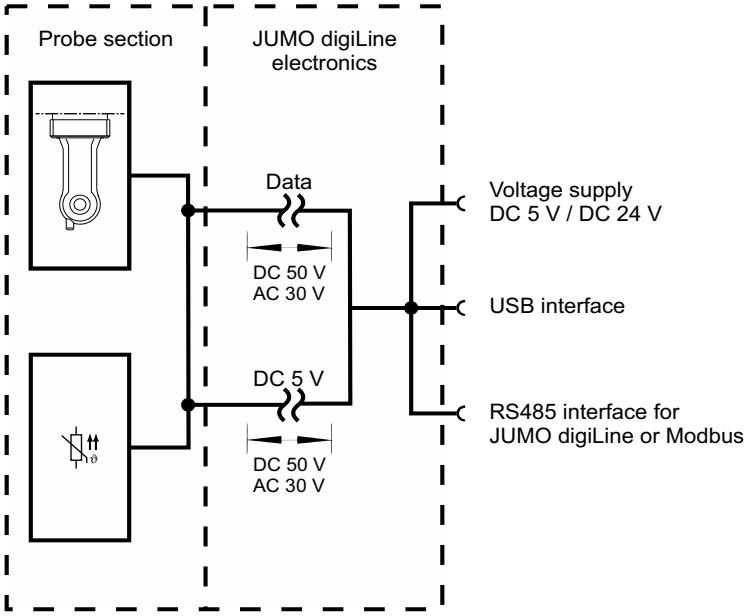

6.2.3 Connection examples

JUMO digiLine mode

The graphic shows the installation example of a system with 3 sensors (pH, inductive conductivity and temperature) with JUMO digiLine pH/ORP/T and JUMO digiLine Ci connected to a JUMO AQUIS touch S. The bus subscribers on the JUMO digiLine bus are connected to one another via a JUMO digiLine hub and M12 connecting cables. Appropriate fittings are available from JUMO for mounting the sensors.

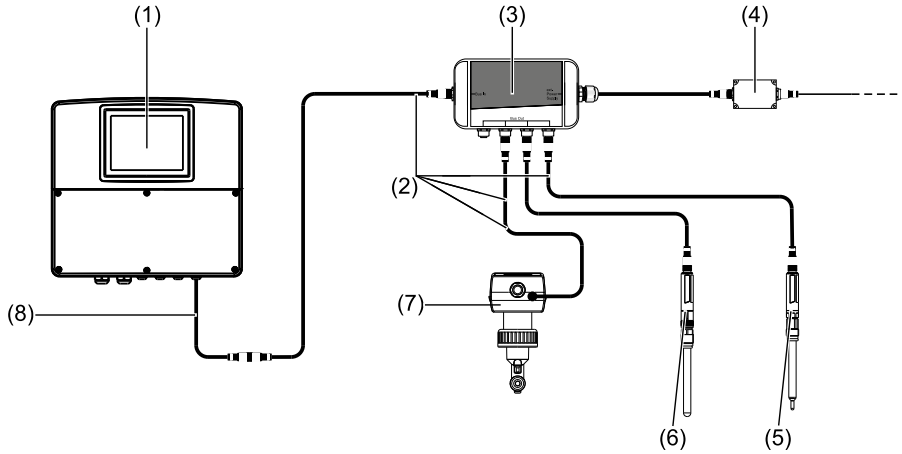

1 JUMO AQUIS touch S with RS485 bus terminator in the device

2 JUMO M12 connecting cable, five-pole and A-coded;
the required total line length between master and sensors can be achieved by combining several M12 connecting cables. When planning the line lengths, heed the information regarding cable planning in the Annex of the operating manual for the JUMO AQUIS touch S/P.

3 JUMO digiLine hub with 4× M12 sockets and 1× M12 plug connector, each 5-pole A-coded; supply DC 24 V with separate power supply unit

4 separate DC 24 V power supply unit for the voltage supply to the JUMO digiLine-bus system

5 JUMO compensation thermometer with five-pole JUMO digiLine T
Order example: compensation thermometer 201085/89-1005-21-120 with
JUMO digiLine-T: 202705/30/86-530

6 JUMO pH-sensor with five-pole JUMO digiLine pH
Order example: pH-Sensor 201021/10/12-04-22-120/000 with
JUMO digiLine-pH: 202705/10/86-530

7 JUMO digiLine Ci in the device version as a head transmitter with inductive conductivity sensor

8 JUMO digiLine master connecting cable with exposed wire ends at one end for connection to devices with screw or spring-cage terminals; connection is described in the operating manual of the JUMO AQUIS touch S/P.

6 Electrical connection

Operation of JUMO digiLine Ci in the device version with RS485 interface on the JUMO mTRON T

The graphic shows the connection of 1 sensor with JUMO digiLine pH/ORP/T with 5-pole M12-plug connection and 1 conductivity sensor with JUMO digiLine Ci in the device version with RS485 interface on a JUMO mTRON T as Modbus master. Up to 31 digital sensors per RS485 interface can be integrated. Optionally, a JUMO mTRON T central processing unit can be equipped with up to 2 RS485 interfaces (see order data for JUMO mTRON T).

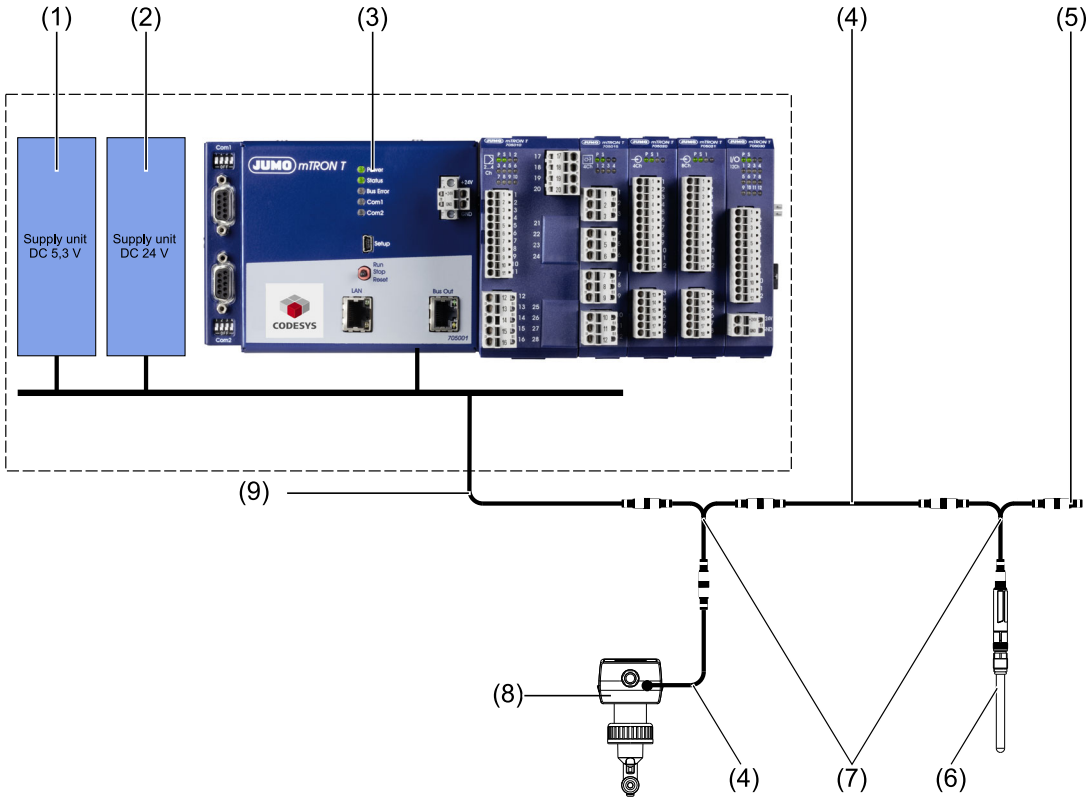

1 Stabilized power supply unit with DC 5.3 V output for feeding sensors with JUMO digiLine pH/ORP/T 5-pole (current limiting via 2 A fuse required)

2 Stabilized power supply unit with DC 24 V output for feeding sensors with JUMO digiLine Ci and JUMO mTRON T (current limiting via 2 A fuse required)

3 JUMO mTRON T central processing unit with activated PLC function and RS422/485 Modbus RTU (see order data for JUMO mTRON T)

4 JUMO M12 connecting cable, 5-pole and A-coded

5 JUMO M12 terminating connector, 5-pole for bus termination

6 JUMO sensors with JUMO digiLine pH/ORP/T five-pole

7 JUMO Y-splitter, 5-pole with 2× M12 cable sockets and 1× M12 connector, each of which is A-coded

8 JUMO digiLine Ci as head transmitter with inductive conductivity sensor and RS485 interface

9 JUMO digiLine master connecting cable with open wire ends at one end for connection to devices with screw or spring-cage terminals (see Accessories); for connection to the Modbus system, refer to the wiring diagram in the following.

Wiring diagram for Modbus mode

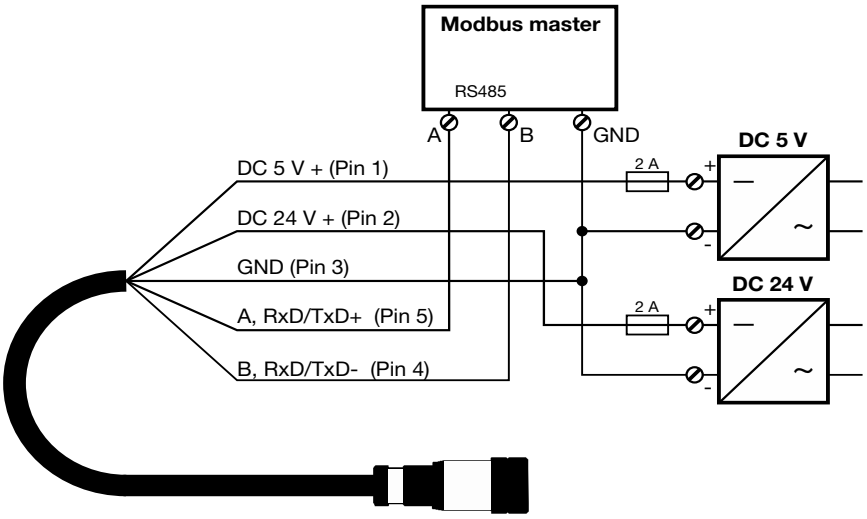

6 Electrical connection

7.1 General Information

Operating the JUMO digiLine Ci

The JUMO digiLine Ci is available in device versions with or without display and membrane keyboard for local operation (see "Display and control elements of the JUMO digiLine Ci", Page 14).

All device versions have a status LED inside the housing which shines through the transparent housing threaded coupling. The device versions with plastic housing without a display also have a status LED on the front of the device.

Depending on the date of manufacture of the device, the status is displayed either via the status LED on the front or the internal status LED.

The status LEDs show the operating statuses of the device. The operating statuses are signaled as follows:

- **Flashing green in one-second interval:** Measuring mode
- **Flashing red in one-second interval:** Error (see chapter 11 "Troubleshooting in the event of faults", Page 57)
- **Flashing red very quickly (5× per second):** Serious error (see chapter 11 "Troubleshooting in the event of faults", Page 57)

Device versions with display and operating panel show their measured values and operating status (e. g. error status) locally and allow local access to some settings, device information and calibration functions of the device. There are 4 operating keys on the membrane keyboard:

Explanation	Operating key
"OK" Opens submenus and confirms entries	
"Back" Returns to the previous menu level; leaves Settings and discards entries and setting changes	
"Up" Move cursor up in the current menu level, scroll up or adjust setting values higher When the "Up" operating key is held down while adjusting numerical values, the change in the value accelerates.	
"Down" Move cursor down in the current menu level, scroll down or adjust setting values lower When the "Down" operating key is held down while adjusting numerical values, the change in the value accelerates.	

Configuration and calibration via interfaces

All device versions can be connected to a PC using USB. The device can be configured and calibrated on a PC using the **JUMO DSM software**. Refer to the operating manual for the JUMO DSM software for more details.

The USB interface is located behind the device's housing threaded coupling. Remove the housing threaded coupling to access the USB interface. Note that the protection type of the device is given for the sealed housing. Once you have finished working on the PC, the housing threaded coupling must be screwed into the housing opening of the device again.

7 Operation

The device versions with **RS485 interface for JUMO digiLine** can also be set and calibrated on the **JUMO AQUIS touch S/P** in the corresponding menus for digital sensors. The JUMO mTRON T can also access the data from the JUMO digiLine via Modbus.Ci The options for access to configure and calibrate depend on the PLC implementation in the JUMO mTRON T (see interface description for the Modbus on the JUMO digiLineCiand the documentation for the JUMO mTRON T).

Measuring mode

After the JUMO digiLine has been switched on Ci the JUMO logo appears briefly on the display in device versions with a display. The device then switches to the measuring mode. The "Up" and "Down" operating keys can be used to navigate through 3 different display screens:

- Main display screen with electrolytic conductivity and temperature
- Detailed measurement display with compensated and uncompensated measured values
- Bar graph display of the sensor stress level (for degree of current sensor stress, seechapter 13.4 "CIP/SIP", Page 66)

In device versions without a display, the flashing green status LED indicates that the device is operating and there are no errors.

7.2 Device menu

The device menu is opened from the measuring mode by pressing the "OK" operating key. The submenus listed in the following table are available here.

Submenu	Explanation
Log-on/Log-out	The user logs on and out here. In addition, passwords can be changed here. ⇨ chapter 7.2.1 "Log-on/Log-out", Page 43
Calibration	Functions for calibrating the JUMO digiLine Ci with the currently connected sensor ⇨ chapter 7.2.3 "Calibration", Page 44
Configuration	Device settings ⇨ chapter 13 "Configuration", Page 63
Device info	Information on device hardware and software. ⇨ chapter 7.2.4 "Device information", Page 44
Service	Functions and information on diagnosis and maintenance of the device hardware ⇨ chapter 7.2.5 "Service", Page 44

To navigate through the menu hierarchy, use the "Up" and "Down" operating keys to move the cursor to the submenu you wish to open. You can recognize the position of the cursor by the inverted appearance of the highlighted menu entry. Pressing the "OK" operating key opens the submenu marked by the cursor. Arrow symbols (pointed brackets) at the end of the line after menu entries indicate that additional submenus are available. If the number of menu entries in a menu exceeds the number of display lines, a scroll bar appears at the right edge of the display.

To change setting values (e.g. configuration settings or parameters in the Service menu) proceed through the menu structure to the desired setting item. Press the "OK" operating key. The setting value now starts to flash. While it is flashing, you can change the value with the "up" and "down" operating keys. To apply the new setting value, press the "OK" operating key again. The value stops flashing and is applied in the device.

7.2.1 Log-on/Log-out

You can log on to the device in the "Log-on/Log-out" submenu. Depending on the rights required, this is necessary to change device settings and to perform calibration as well as Ci base calibration. When you are logged in, the logged-in user is shown in the header of the measurement display.

In addition, you can log out again or change passwords in the "Log-on/Log-out" submenu. The password for a user can be changed only when the user is logged in.

Factory-set passwords

Users	Administrator	User
Factory-set password	9200	300
Default rights	• General operation (measuring mode and device information)	• General operation (measuring mode and device information)
	• Calibration rights (calibration and Ci base calibration) • Administrator rights	

Logon

Accessing a menu: Device menu > Log-on/Log-out > Logon

After Logon opens, the device requires that a user be selected (flashing user name). Use the "Up" and "Down" operating keys to select the desired user and confirm by pressing the "OK" operating key. The password is requested next (flashing display). The password is a numerical value. You use the "Up" and "Down" operating keys to change the password. Press the "OK" operating key to confirm the entry.

After successful logon, the logged-in user appears in the header (flashing) in the measuring mode.

Logoff

Accessing a menu: Device menu > Log-on/Log-out > Logout

Opening the menu item "Logoff" logs off logged in users from the device. The device then indicates successful logoffs in the display and you can use the "Back" operating key to return to the menu hierarchy or measured value display.

Change the password

Accessing a menu: Device menu > Log-on/Log-out > Change password

Log on the user for whom the password is to be changed and then open "Change password".

Once you have accessed "Change password", you are requested to enter a new password for the logged-in user (flashing password value "0"). You now use the "Up" and "Down" operating keys to change the password value to the desired value. Finally, you confirm the new password by pressing "OK" operating key. The device then indicates successful acceptance of the new password and you can use the "Back" operating key to return to the menu hierarchy or measured value display.

7.2.2 User level

The user level consists of a user-defined list of parameters and configuration settings. Up to 10 parameters can be saved. You need the JUMO DSM software to configure the user level. Using this software, the user level can be created in the configuration menu of the JUMO digiLine electronics connected to the JUMO DSM software.

The user level can be opened from the device menu only if it has been configured beforehand with the aid of the JUMO DSM software. If this is not possible, there is no user level present in the device menu. Opening the user level provides easy and uncomplicated access to the selected parameters and settings. These can be edited from here.

7.2.3 Calibration

You can find all functions for calibrating your sensor in this menu. A detailed description of the calibration procedure can be found in chapter 9 "Calibration", Page 47.

7.2.4 Device information

In device versions with a display, the "Device info" submenu is available for checking and diagnosis purposes. Information on the device hardware and software is shown here:

- **Version:** Version information on device hardware and software
- **Device version:** Description of your device version
- **Sensor information (for head transmitters only):** Information and data regarding the sensor section of the head transmitter
  ⇨ chapter 12.2 "Sensor data", Page 59
- **Sensor tag:** User-defined plain text identification marking for identifying a measuring point; the sensor tag must be entered in the JUMO digiLine electronics with the aid of the JUMO DSM software.
  ⇨ chapter 12.2 "Sensor data", Page 59.
- **Sensor origin:** This entry gives information about the JUMO digiLine master with which the JUMO digiLine electronics were last used.
  ⇨ chapter 12.2 "Sensor data", Page 59

7.2.5 Service

Maintenance functions and functions for setting the device hardware are found in the "Service" menu:

- **Contrast:** Sets the display contrast in 10 steps - adjustable by means of the "Up" and "Down" operating keys
- **Ci base calibration (for JUMO digiLine Ci only):** The "Ci base calibration" function must be used during the initial startup of the JUMO digiLine Ci and when replacing inductive conductivity sensors on device versions with a separate sensor in order to match the sensor and measurement input of the JUMO digiLine electronics. For the Ci base calibration procedure, see chapter 10 "Ci base calibration", Page 55.
- **CIP/SIP counter:** Display of the number of CIP/SIP cycles already performed in response to exceeding the CIP/SIP temperatures and status display of the CIP/SIP alarms. The CIP/SIP temperatures are set in the configuration data (see chapter 13.4 "CIP/SIP", Page 66).

General information

Startup of the JUMO digiLine Ci with RS485 interface in the 2 possible versions is described below:

- Sensor with JUMO digiLine electronics on a JUMO AQUIS touch S/P
- Sensor with JUMO digiLine electronics on a Modbus master



CAUTION!

The combination of a JUMO digiLine Ci and an inductive conductivity sensor must be matched during initial startup through a Ci base calibration. This applies to startup of new devices and when replacing a sensor on device versions with a separate sensor.

Exact measurement and calibration with inductive conductivity sensors and corresponding transmitters is not possible without a Ci base calibration.

▶ Run a Ci base calibration on the JUMO digiLine Ci during every startup of an inductive conductivity sensor!



CAUTION!

The electrical characteristics of analysis sensors are dependent upon numerous factors, e.g. aging and wear.

For accurate measurements, analysis sensors must be calibrated.

▶ In the course of startup, it is necessary to ensure that the sensor was calibrated correctly. This can be done either during startup or also in advance on a PC with the JUMO DSM software.
⇨ chapter 9 "Calibration", Page 47



WARNING!

Errors during installation, mounting, or configuration of sensors with JUMO digiLine electronics can disrupt proper execution of the downstream process or cause damage.

▶ For this reason, it is always necessary to provide safety devices that are independent of the device and to allow settings to be made only by technical personnel.

Startup on a JUMO AQUIS touch S/P

The startup of JUMO sensors with digiLine electronics on a JUMO AQUIS touch S/P is largely automatic thanks to plug & play support. Newly connected digiLine electronics, however, must be assigned a device function by the user. The startup procedure consists essentially of the following stations:

- **Sensor Scan:** The first step involves searching for newly connected sensors with JUMO digiLine electronics. This is initiated either by a device restart or manual starting of the sensor scan by the user.
- **Sensor Link:** Known sensors with JUMO digiLine electronics are then assigned to the desired input functions of the JUMO AQUIS touch S/P by the user.

  Status after a successful Sensor Link step: NotInstalled

  Status after a failed Sensor Link step: NoLink
- **Sensor Install:** The JUMO AQUIS touch S/P synchronizes configuration data with the JUMO digiLine electronics and puts them into service.

  Status after a successful Sensor Install step: LinkActive
- **Sensor Transfer:** The JUMO digiLine electronics have been set up successfully and put into service

The exact procedure for performing startup is described in detail in the operating manual and installation instructions for the JUMO AQUIS touch S/P.

8 Startup

Startup with a JUMO mTRON T as the Modbus master

A JUMO mTRON T has no plug & play mechanisms. The settings of the digital interface of the JUMO digiLine electronics must be made prior to connection with the JUMO DSM software in accordance with the interface settings of the Modbus master.

- **Device address:** The user assigns to the JUMO digiLine electronics a device address that identifies it uniquely in the Modbus system. Duplicate device addresses are not allowed in a Modbus system; otherwise, malfunctions result.
- **Baud rate:** The baud rate of the JUMO digiLine electronics must match that of the Modbus master.
- **Data Format:** The data format (data bits - stop bits - parity) must match the settings on the Modbus master.
- **Minimum Response Time:** The minimum response time provides an intentional response delay for the digiLine electronics in order to solve timing problems in the bus communication with slow Modbus masters. This setting can be changed if necessary.

The JUMO digiLine electronics are then configured on the PC via the JUMO DSM software. It is also possible, with write access to configuration parameters in the Modbus address table, to change the configuration parameters of the JUMO digiLine electronics. A detailed description of how the Modbus protocol is used can be found in the interface description.Operating manual for the JUMO DSM softwareModbus interface description B 202706.2.0

When correctly wired and configured, the JUMO digiLine electronics start operating immediately after the measuring or automation device to which it was connected is put into service.

Language selections on device versions with display

With the device switched on and in the measuring mode, press and hold the menu key until the display on the device changes to language selection. Using the "up" and "down" operating keys, you can now select one of the operating languages displayed with the cursor and then confirm your selection with the "OK" operating key.

8.1 Functional test

Functional check on the PC

The JUMO DSM software enables a sensor with JUMO digiLine electronics to be checked for proper operation. The software provides the ability to display current measured values on a PC.

⇨ JUMO DSM software operating manual

Functional check on a JUMO AQUIS touch S/P

On a JUMO AQUIS touch S/P, a JUMO sensor with digiLine electronics is displayed as "linked" as soon as it has been recognized correctly and set up. Further information can be found in the operating manual and installation instructions of the JUMO AQUIS touch S/P.

9.1 General information



CAUTION!

The combination of a JUMO digiLine Ci and an inductive conductivity sensor must be matched during initial startup through a Ci base calibration. This applies to startup of new devices and when replacing a sensor on device versions with a separate sensor.

Exact measurement and calibration with inductive conductivity sensors and corresponding transmitters is not possible without a Ci base calibration.

▶ Run a Ci base calibration on the JUMO digiLine Ci during every startup of an inductive conductivity sensor!

The actual electrical characteristics of analysis sensors always deviate somewhat from the nominal specifications. The reasons for this include:

- Like every measuring instrument, analysis sensors always have a certain uncertainty of measurement that results from manufacturing tolerances.
- During use, analysis sensors are exposed to chemical processes. Deposits and wear phenomena caused by these processes result in changes of the electrical characteristics of sensors.

To optimize the accuracy of measurements, analysis sensors must be calibrated. Calibrations are required:

- during installation or when changing a sensor
- regularly at time intervals that must be specified by the user
- if implausible measured values are displayed
- if process conditions change (e. g. as the result of equipment modification)

Each successfully completed calibration of the relative cell constant and TC calibration is recorded in the calibration logbook. The calibration logbook can be viewed on the PC using the JUMO DSM software.

9.2 Calibration methods for Ci conductivity sensors (inductive)

Rel. cell constant

The deviation from the nominal cell constant of a Ci sensor is described by the relative cell constant. The relative cell constant is determined by making a measurement in a test solution with a defined conductivity.

Depending on the mode set for the relative cell constant in the configuration of the conductivity input, either a common relative cell constant is used for all 4 measuring ranges or a relative cell constant is determined separately for each measuring range. If "One CC for all MR" has been set in the configuration, the relative cell constant is determined for all 4 measuring ranges in a single calibration process. If "One cell constant per measuring range" has been set, a separate calibration of the cell constant must be performed for each measuring range.

⇨ chapter 13.3.1 "Ci input (inductive conductivity)", Page 63

Temperature coefficient

The temperature coefficient is a measure of the temperature dependence of the electrolytic conductivity of a liquid. It is used to compensate for the effect of temperature when measuring the electrolytic conductivity. When performing a temperature-compensated conductivity measurement, the conductivity value measured is always indicated with reference to the fixed reference temperature. With the aid of the temperature coefficient, the value of the electrolytic conductivity displayed at the reference temperature is calculated from the current measured values of conductivity and temperature of the liquid.
The reference temperature is set in the configuration.

⇨ chapter 13.3.1 "Ci input (inductive conductivity)", Page 63

The temperature coefficient is determined from 2 measurements in a sample of the process medium from your system at different temperatures (reference temp. and operation temp.). The reference temperature is obtained from the configuration. The operation temp. (usual temperature of the process in your system) is entered by the user during the calibration or acquired automatically. The two temperatures must differ from each other by at least 6 °C.

TC curve (for nonlinear temperature coefficients)

If the conductivity of a liquid whose temperature coefficient changes with temperature has to be measured, this method can determine 6 temperature coefficients for 6 temperature intervals. In this way, it is possible to determine a good approximation of the temperature coefficient curve. While the operator brings the sample solution to the temperature values requested by the device, the device determines the temperature coefficient for each interval. This requires installation of a temperature sensor that the device can use to sense the temperature of the sample solution. The series of temperature values consists of 7 values in total:

- "Starting temperature and end temperature of the TC-curve" (see chapter 9.5 "Calibration via local operation in device versions with a display", Page 49)
- Reference temp. (see chapter 13.3.1 "Ci input (inductive conductivity)", Page 63)
- 4 additional temperature values between the "starting temperature and end temperature of the TC curve"

The "end temperature of the TC-curve" be at least 20 °C higher than the "starting temperature of the TC-curve". The two values are requested at the start of the TC-curve calibration and must be entered by the user.

The reference temperature must lie between the "starting temperature and end temperature of the TC-curve" and must differ from the starting temperature and end temperature by at least 1 °C. It is set in the configuration of the Ci conductivity input.

The intervals between the starting, reference-and end temperature are automatically divided into 6 intervals by the device. The remaining 4 temperatures are determined in this way.

The TC curves for the individual measuring ranges can also be edited in the configuration menu of each measuring range by means of the JUMO DSM software.

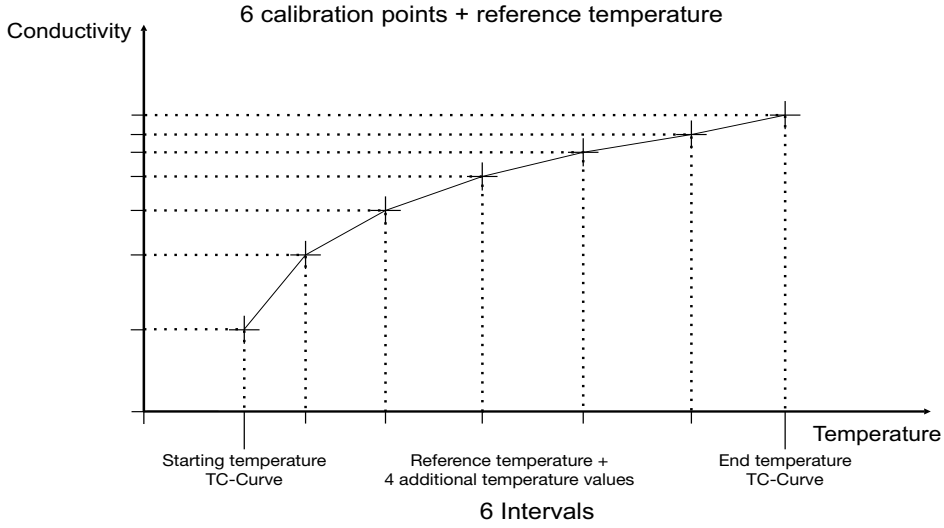

9.3 Calibration default settings

The calibration routines of the device can be enabled//locked in the calibration default settings for the "User". To do this, you must first log in on the device as "Admin".

⇨ chapter 7.2.1 "Log-on/Log-out", Page 43

In addition, the way the temperature is acquired can be set:

- **Automatic temperature acquisition:** During the calibration, the device acquires the calibration measuring points automatically by scanning past the operation or reference temperature. This is only possible when the JUMO digiLine Cieither measures the temperature itself with an integrated sensor or acquires the temperature of the test solution from a master via an interface.
- **Manual temperature acquisition:** This setting can be selected if you wish to trigger acquisition of the calibration measuring points manually by pressing a key during calibration of the temperature coefficient.

9.4 Calibration of the JUMO digiLine Ci with RS485 interface

JUMO digiLine electronics can be calibrated using the JUMO DSM software on the PC in the case of device versions with an RS485 interface, via the operating panel of the JUMO AQUIS touch S/P or via local operation in the case of a device versions with a display. The calibration values are calculated in the JUMO digiLine electronics. The calculated calibration values and the data in the calibration logbook are saved in the JUMO digiLine electronics following successful calibration.

The procedure for calibrating with a PC is described in the operating manual of the JUMO DSM software.

The calibration procedure using the operating panel of the JUMO AQUIS touch S/P is described in the JUMO AQUIS touch S/P manual.

9.5 Calibration via local operation in device versions with a display



CAUTION!

The conductivity measurement by the device has 4 measuring ranges.

During calibration, it is necessary to ensure that all measuring ranges used are taken into account.

▶ Calibrate all 4 measuring ranges individually. For the relative cell constant, the mode for the relative cell constant can also be set to 1 cell constant for all measuring ranges in the configuration of the conductivity input. If you select this setting, you only need to calibrate the relative cell constant once for all of the 4 measuring ranges.
⇨ chapter 13.3.1 "Ci input (inductive conductivity)", Page 63



NOTE!

To perform calibrations, you must log in on the device as a user with calibration rights. By default, the "Administrator" has calibration rights.
⇨ chapter 7.2.1 "Log-on/Log-out", Page 43

9 Calibration

Calibrating the relative cell constant

NOTE!

Depending on the mode set for the relative cell constant in the configuration of the conductivity input, either a common relative cell constant is used for all 4 measuring ranges or a relative cell constant is determined separately for each measuring range
⇨ chapter 9.2 "Calibration methods for Ci conductivity sensors (inductive)", Page 47

Procedure for calibrating the relative cell constant

1. Start calibration of the relative cell constant:

   Device menu > Calibrate > Calibration of relative cell constant

2. If in the configuration of the conductivity input the mode is set to "One CC for all MR", this step can be skipped.

   Use the "Up" and "Down" operating keys to select the measuring range to calibrate from measuring ranges 1 to 4 and confirm by pressing the "OK" operating key.

3. Make sure that the sensor has been cleaned and is immersed in the test solution.

   Wait until the measured value displayed stabilizes and then confirm the result of the measurement by pressing the "OK" operating key.

4. Use the "Up" and "Down" operating keys to set the conductivity value to the reference conductivity of your test solution and confirm the entry by pressing the "OK" operating key.

5. The device displays the relative cell constant determined. The relative cell constant is accepted if you press the "OK" operating key or discarded if you press the "Back" operating key. This completes the calibration.

Calibrating the temperature coefficient (TC)

NOTE!

In the calibration default settings, the "Temperature acquisition" item can be set for automatic acquisition of calibration values when the calibration temperatures are reached. This requires either an integrated temperature sensor or transmission of the measured temperature from a master via an interface.
⇨ chapter 9.3 "Calibration default settings", Page 49
⇨ chapter 13.3.1 "Ci input (inductive conductivity)", Page 63

Procedure for calibrating the temperature coefficient (TC)

1. Start calibration of the temperature coefficient:

   Device menu > Calibrate > Calibration of temperature coefficient

2. Use the "Up" and "Down" operating keys to select the measuring range to calibrate from measuring ranges 1 to 4 and confirm by pressing the "OK" operating key.

3. Use the "Up" and "Down" operating keys to change the displayed operation temp. to the temperature value normally encountered in the process in your system and confirm by pressing the "OK" operating key. The operation temp. must differ from the configured reference temp. by at least 6 °C (see display of allowed temperature ranges on the display). The device accepts the operation temp. only if this difference exists.

4. **with "automatic" temperature acquisition (integrated temperature sensor required)**

   The current measured values for conductivity and temperature as well as operation temp. and reference temp. are shown on the display. Bring the temperature of your sample in succession to the values of the operation temp. and reference temp. The order does not matter. Value acquisition takes place automatically.

   with "manual" temperature acquisition

The current measured values for conductivity are shown on the display. The measured temperature value is only shown if the temperature input is activated. If the temperature input is not activated, you must measure the temperature of the sample during the calibration with the aid of a separate, appropriate temperature measuring device.

Bring the temperature of your sample in succession to the values of the operation temp. and reference temp. The order does not matter. When each of the temperatures is reached, press the "OK" operating key to trigger value acquisition.

5. The device displays the temperature coefficient determined. The temperature coefficient is accepted if you press the "OK" operating key or discarded if you press the "Back" operating key. This completes the calibration.

Calibrating the temperature coefficient curve (TC-curve)

NOTE!

To calibrate the TC-curve, a temperature measurement must be available at the device (integrated temperature sensor or temperature from a master via an interface). Without acquisition of the temperature of the process medium sample, the TC-curve cannot be calibrated.
⇨ chapter 13.3.1 "Ci input (inductive conductivity)", Page 63

Procedure for calibrating the temperature coefficient curve (TC-curve)

1. Start calibration of the temperature coefficient curve:

   Device menu > Calibrate > Calibration of TC-curve

2. Use the "Up" and "Down" operating keys to select the measuring range to calibrate from measuring ranges 1 to 4 and confirm by pressing the "OK" operating key.

3. Use the "Up" and "Down" operating keys to change the displayed starting temperature and confirm entry of the value by pressing the "OK" operating key.

   Keep in mind that the starting and end temperature must differ by at least 20 °C.

4. Use the "Up" and "Down" operating keys to change the displayed end temperature and confirm entry of the value by pressing the "OK" operating key.

   Keep in mind that the starting and end temperature must differ by at least 20 °C.

5. The device now displays in succession the calibration points of all 7 temperature values from the starting to the end temperature. Each of the temperature values to be approached and the currently measured conductivity value are displayed. Bring the temperature of your process medium sample to the each temperature displayed. When each of the temperature values is reached, automatic value acquisition takes place for the requested temperature.

6. After successful value acquisition at all 7 calibration points, a summary of the temperature coefficients determined for the individual temperature intervals is displayed. The temperature coefficients are accepted if you press the "OK" operating key, or discarded if you press the "Back" operating key. This completes the calibration.

9.6 Calibration values

General information

In the Calibration > Calibration values menu, you can view the current calibration values and also edit them manually. To enter calibration values manually, you must log in on the device as "Administrator" (see chapter 7.2.1 "Log-on/Log-out", Page 43).

9 Calibration

Manual entry of calibration values



CAUTION!

Incorrect calibration values result in incorrect measured values!

This can disrupt proper execution of the downstream process and cause damage.

▶ Make sure that you enter the correct calibration values!

If the calibration values are known, you can enter them manually in the ***Calibration > Calibration values*** menu. This may be the case with temperature-compensated conductivity measurements, for instance, when the temperature coefficient of a liquid is known.

9.7 Calibration logbook

The calibration logbook is saved in the JUMO digiLine electronics. The last 10 successful calibrations are saved in the calibration logbook. After a connection to the digital sensor has been established successfully by the JUMO DSM software, the calibration logbook entries in the digital sensor connected to the PC are read by the JUMO DSM software and saved on the PC. There is no limit to the number of calibration logbook entries that can be saved on the PC. Canceled or failed calibrations (calibrations outside the admissible limits) are not saved in the logbook. Manual changes of calibration values are also documented. The following data are retained in the logbook:

- Date and time (only available when calibrating with the JUMO DSM software)
- Calibration values determined or entered
- Calibration mode (true calibration/manual entry of calibration values)
- Calibration assessment (assessment of the calibration values determined during the true calibration)
- Sensor replacement counter reading (to assign the calibration logbook entries to the individual sensors in the sensor replacement history of the JUMO digiLine electronics)

The calibration logbook can be viewed on the JUMO AQUIS touch S/P and on the PC using the JUMO DSM software.

9.8 Evaluation criteria for calibration

Evaluation criteria for calibration of relative cell constant

Calibration value [unit]	**invalid**			**Warning**			**OK**			**Warning**				**invalid**
Relative cell constant [%]	...	<	80	≤	...	<	90 to 110	<	...	≤	120	<	...	

Evaluation criteria for calibration of temperature coefficient

Calibration value [unit]	**invalid**		**Warning**		**OK**		**Warning**	**invalid**
Temperature coefficient [%/K]	...		<	0 to 6	<			...

9 Calibration

Analysis inputs for inductive conductivity sensors must undergo a Ci base calibration during startup. A Ci base calibration must be performed on the JUMO digiLine electronics during replacement of an inductive conductivity sensor in order to match the replacement sensor and the measuring input of the JUMO digiLine electronics to one another.

The Ci base calibration can be performed on the PC using the JUMO DSM. When operated on a JUMO AQUIS touch S/P, the Ci base calibration can be controlled from its operating panel. On device versions with a display, the Ci base calibration can be performed directly on the JUMO digiLine Ci.

NOTE!

For the Ci base calibration, you need the JUMO Type 202711/21 calibration adapter for inductive conductivity sensors (TN 00543395).

NOTE!

In order to perform a Ci base calibration, you must log in on the device as Administrator.
⇨ chapter 7.2.1 "Log-on/Log-out", Page 43

Performing the Ci base calibration on the JUMO digiLine Ci using local operation

1. Place the sensor such that the sensor body is suspended freely in air. Observe the following rules during the entire calibration:

   Keep all objects away from the sensor body,

   Do not touch the sensor body,

   Do not allow the sensor body to lie flat on a surface,

Sensor body of a Ci sensor

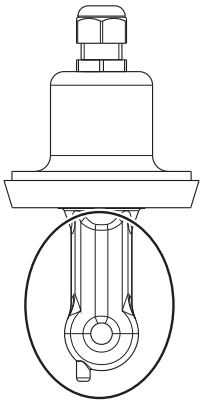

2. Place the wire of the calibration sensor with 2 windings through the opening in the Ci sensor without connecting the ends of the wires.

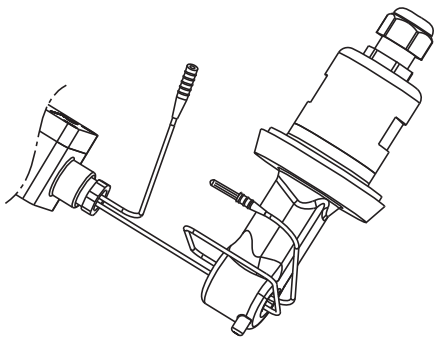

3. Start the Ci base calibration:

   Device Menu > Service > Ci base calibration

4. Use the "Up" and "Down" operating keys to set the cell constant to the nominal cell constant of your inductive conductivity sensor and confirm the entry by pressing the "OK" operating key.
5. The device is now ready to measure the calibration adapter with an open cable loop. A corresponding text requesting the measurement with an open loop appears on the display.

   Start the measurement by pressing the "OK" operating key and wait for the measurement to end.
6. Connect the wire ends of the cable loop on the calibration adapter.

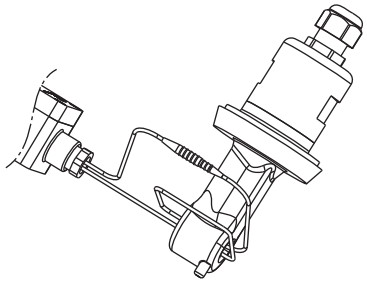

7. Set the calibration adapter to the resistance value shown in the instruction text on the display. Once the measured value displayed has stabilized, confirm by pressing the "OK" operating key.
8. The device requests additional resistance values for acquisition in the same way described in the above step. Set the calibration adapter to each of the requested resistance values and start each measurement by pressing the "OK" operating key.
9. After all resistance values have been acquired successfully, the device indicates on the display either the completed calibration with a list of the individual values acquired, or an error. In the case of errors, the device displays values that exceed the limit values in an inverted appearance. If the calibration is error-free, you can accept the calibration data by pressing the "OK" operating key. If necessary, you can discard the calibration by pressing the "Back" operating key. If an error exists, no data is accepted and the Ci base calibration must be performed again.

General troubleshooting

In the event of bus faults in JUMO digiLine or Modbus systems, check the following items:

- All plug-in and terminal connections in the bus must be made correctly and be tight. As long as bus communication in general is not disrupted (e.g. as the result of disconnected or short-circuited bus cables or missing terminating resistors), JUMO digiLine electronics which have been disconnected from the bus can be identified within the "Reference table" for the device software of the the JUMO AQUIS touch S/P. Further information in this regard can be found in the operating manual of the respective device.
- The ends of bus cables with line topology must have terminating resistors or terminating connectors (part no. 00461591). Stub lines do not require termination.
- The bus voltage supply must be intact and stable (cf. chapter 6 "Electrical connection", Page 33 and chapter 15.3 "Electrical data", Page 75).

Status LED on device versions without display

The status LED indicates the operating/fault status of the device.

LED indication	Explanation
Flashing green in one-second interval	The device is in the measuring mode (no faults).
Flashing red in one-second interval	A valid temperature value and/or conductance could not be determined. Connect the device to a PC and check its operation and configuration with the aid of the JUMO DSM software.
Flashing red very quickly (5× per second)	A serious fault has occurred (data loss in device-internal data). Load the configuration into the device again with the aid of the JUMO DSM software and then switch the device off for a restart and then back on again. If the fault is still present, calibrate the device. If the fault persists, the device must be returned and repaired by JUMO Service.

11 Troubleshooting in the event of faults

12.1 General Information

Information about the device and its process/operating data is stored in the JUMO digiLINE electronics. These data can be viewed on the JUMO AQUIS touch S/P or using the JUMO DSM software.

The operating data includes signals such as alarms, measured values and sensor monitoring data. The measured values can be displayed and the status of sensor operation observed using the JUMO DSM software or on the JUMO AQUIS touch S/P.

12.2 Sensor data

The sensor data provides an overview of sensor characteristics and settings. No data can be edited here. All data that can be saved in the device (depending on the device version) is listed in the following.

Data point	Explanation
Manufacturer's data	
Device name	Type information as well as software and hardware version of the JUMO digiLine Ci
Software version of the main processor	
Software version of the input processor	
Hardware version	
Sensor type	Article information on the sensor mounted on the JUMO digiLine electronics is entered in these fields by the manufacturer during production. The data are displayed in the JUMO DSM software. In the Modbus mode, these data can also be retrieved for viewing only. The user can refer to these data when reordering.
Sensor subtype	
Manufacturers	
Customer order number	
VK job number	
Part no.	
Customer type	
Order code	
Customer item number	
Customer number	
Serial number	
Hardware address	
Date of manufacture	
Cal. status	
Sensor information	
Minimum ambient temperature	These fields hold data on the sensor type currently in use.
Maximum ambient temperature	
Minimum medium temperature	
Maximum medium temperature	
Minimum conductivity	
Maximum conductivity	
Maximum pressure at 25 °C	
Material in medium	
Material not in contact with medium	
Process connection	
Tests / approvals	
Cell constant	

12 Data overview

Data point	Explanation
	Measuring point information
TAG number	The "TAG number" identifies the measuring point with a unique ID assigned by the user using the JUMO DSM software. With the aid of the "TAG number", the JUMO digiLine electronics can be assigned to a designated digital sensor input of a JUMO AQUIS touch S/P. When "TAG check" is activated in the JUMO digiLine master, matching of the sensor's "TAG number" and the digital sensor input is checked by the JUMO AQUIS touch S/P. If there is no match, the JUMO digiLine electronics are not linked to the master. The "TAG number" of the JUMO digiLine electronics can be edited only with the JUMO DSM software.
Description	Text field for a description of the measuring point. The description can be edited only with the JUMO DSM software.
Sensor origin	The "Sensor origin" is assigned by the JUMO digiLine master to which the JUMO digiLine electronics were last connected and provides information about the device on which the JUMO digiLine electronics were last connected.

12.3 Process values

Data point	Explanation
Uncomp. actual value	Electrolytic conductivity in the unit set in the configuration data and without consideration of the effect of temperature
Compensated actual value	Measured value of the electrolytic conductivity in the unit set in the configuration data and with correction for the effect of temperature
Compensation temperature interface	Temperature value received via the interface This value is used for temperature compensation when the setting "Via interface" was selected in the parameter "Compensation signal" in the configuration. **JUMO digiLine Mode:** The compensation temperature is transmitted from the JUMO digiLine master. **Modbus Mode:** The user must ensure that the "Compensation temperature interface" is updated cyclically by the Modbus master (JUMO mTRON T). The Modbus functionality is explained in detail in the separate Modbus description.
Conductivity invalid	In the event of a fault during the conductivity measurement (e. g. as the result of a measuring range violation or compensation error), this alarm is triggered and generates a corresponding signal on the JUMO AQUIS touch S/P. It can also be queried by a Modbus master (JUMO mTRON T).
temp.	**only for conductivity sensors with an integrated temperature probe:** current value measured by the integrated temperature probe
Temperature alarm signal	In the event of a fault during the temperature measurement (e. g. as the result of a measuring range violation or compensation error), this alarm is triggered and generates a corresponding signal on the JUMO AQUIS touch S/P. It can also be queried by a Modbus master (JUMO mTRON T).

Data point	Explanation
Sensor stress	The "Sensor stress" value reflects the current level of stress on the sensor from rapidly changing temperatures and aggressive media (high conductivity values measured in the high-purity water measurement or elevated reactivity at high temperatures). When specified limit values are reached, the following sensor stress alarm conditions are signaled on the JUMO digiLine master: • Pre-alarm for sensor stress above sensor stress level 3 • Alarm for sensor stress above sensor stress level 7
Sensor stress pre-alarm state	This pre-alarm is generated at a sensor stress level greater than 3.
Sensor stress alarm state	In addition to the "Sensor stress pre-alarm", this alarm is triggered at a sensor stress level greater than 7 and generates a corresponding signal on the JUMO AQUIS touch S/P. It can also be queried by a Modbus master (JUMO mTRON T).
CIP counter	Number of previous CIP cycles identified as having exceeded the CIP temperature The CIP temperature is set in the configuration data. ⇨ chapter 13 "Configuration", Page 63
SIP counter	Number of previous CIP cycles identified as having exceeded the SIP temperature The SIP temperature is set in the configuration data. ⇨ chapter 13 "Configuration", Page 63
CIP/SIP pre-alarm signal	On reaching the maximum number of CIP or SIP cycles set for this pre-alarm signal, this pre-alarm is triggered and generates a corresponding signal on the JUMO AQUIS touch S/P. It can also be queried by a Modbus master (JUMO mTRON T). The maximum number of CIP/SIP cycles for this pre-alarm is set in the configuration data. ⇨ chapter 13 "Configuration", Page 63
CIP/SIP alarm signal	On reaching the maximum number of CIP or SIP cycles set for this alarm signal, this alarm is triggered and generates a corresponding signal on the JUMO AQUIS touch S/P. It can also be queried by a Modbus master (JUMO mTRON T). The maximum number of CIP/SIP cycles for this alarm is set in the configuration data. ⇨ chapter 13 "Configuration", Page 63

12.4 Operating data

Data point	Explanation
Operation hours counter	The operating hours counter records the total operating time of the JUMO digiLine electronics to the second. It cannot be configured or reset.
Sensor replacement counter	The sensor replacement counter records how often sensors on the JUMO digiLine Ci were replaced. It provides a history on the PC of archived sensor information and calibration logbook entries for every sensor with which the JUMO digiLine electronics were operated. The sensor replacement counter is incremented by the JUMO DSM software. ⇨ JUMO DSM software operating manual
Initial startup date	Date of the initial startup on a JUMO AQUIS touch S/P
Operating hours counter reading at initial startup	Operating hours counter reading at startup on a JUMO digiLine master

12 Data overview

Data point	Explanation
Drag indicator for temperature	
Lowest temperature value	Data on the highest or lowest temperature values that occurred inside the device in the course of operation to date.
Highest temperature value	
Time of lowest temperature value	
Time of highest temperature value	
Operating hours counter reading at lowest temperature	
Operating hours counter reading at lowest temperature	
Extreme conditions[a]	
Total time below the minimum temperature	Total time violating the admissible min./max. values of temperature and electrolytic conductivity The min./max. values of temperature and electrolytic conductivity depend on the sensor used and are stored in the "Sensor information".
Total time above the maximum temperature	
Total time above the maximum conductivity value	
Number of times below the minimum temperature	Number of times above or below the admissible min./max. values of temperature and electrolytic conductivity The min./max. values of temperature and electrolytic conductivity depend on the sensor used and are stored in the "Sensor information".
Number of times above maximum temperature	
Number of times above the maximum conductivity value	

[a] only available on device versions as head transmitter

12.5 Calibration data

Data point	Explanation
Rel. cell constant	The deviation from the nominal cell constant is described by the relative cell constant. It is established by the calibration.
Remaining running time on calibration timer	Elapsed time on calibration timer When this time has elapsed, the calibration alarm is triggered to signal that a calibration is due.
Calibration alarm	The calibration alarm is triggered when the time set on the calibration timer has elapsed and generates a corresponding signal on the JUMO AQUIS touch S/P. It can also be queried by a Modbus master (JUMO mTRON T). On device versions with a display, the calibration alarm flashes in the header of the display.

13.1 General Information

Device versions of the JUMO digiLineCi with a display can be configured directly on the device using the operating keys and the display. To change configuration settings, you must log on to the device as "Administrator" beforehand (see chapter 7.2.1 "Log-on/Log-out", Page 43).

In addition, JUMO digiLine electronics in device versions with an RS485 interface can also be configured from a JUMO AQUIS touch S/P, or on a PC using the JUMO DSM software. Further information can be found in the operating manual and installation instructions of the JUMO AQUIS touch S/P or the JUMO DSM software.

The tables in this chapter explain all of the configuration parameters of the JUMO digiLine electronics.

13.2 Important information



CAUTION!

Incorrect configurations can cause sensor malfunctions.

The consequence may be erroneous measured values.

▶ Prior to startup, check all information in the configuration.

13.3 Input

13.3.1 Ci input (inductive conductivity)

Configuration item	Selection/setting option	Explanation
Compensation temperature	Manual temperature via temperature input interface	Selects the source for the compensation temperature **Manual temperature:** Compensation using a fixed temperature value entered in the "Manual temperature" configuration item. **Via interface:** Compensation temperature is transferred by master. **Temperature input:** The integrated temperature probe of the sensor supplies the compensation temperature.
Manual temperature	-50 to 250 °C	Constant compensation temperature value If the **"Compensation temperature"** configuration item is set to **"Manual temperature"**, this value is used for temperature compensation of the measured conductivity value.
Reference temperature for linear TC	15 to 30 °C	**required only for conductivity measurement with "TC linear", "TC-curve" and TDS temperature compensation:** The temperature at which the conductivity value displayed was set
Filter time constant	0.0 to 25.0 s	Optimization of measured value updating The larger the value of the filter time constant, the slower is the change in measured value at the output.
Rel. cell constant mode	One CC for all MR One CC for each MR	This parameter can be used to specify whether one relative cell constant should be used for all 4 measuring ranges, or whether each measuring range should have its own cell constant and that is used for the measured value calculation. ⇨ "Calibrating the relative cell constant", Page 50

Configuration item	Selection/setting option	Explanation
Nominal cell constant	4 to 8 cm^{-1}	**only for device versions with a separate sensor** nominal cell constant of the conductivity sensor (can be read from the sensor nameplate)
Install. factor	80 to 120 %	This factor helps to correct for sensor measurement errors that can occur when the sensor cannot be mounted as indicated in the installation instructions for the particular sensor. Heed the specifications in the documentation for the respective sensors. ⇨ chapter 4.1 "Order details", Page 17

13.3.2 Measuring ranges 1 to 4 for the Ci input

Measuring range selection

On device versions with an RS485 interface for JUMO digiLine, the individual measuring ranges are activated by the master (JUMO AQUIS touch S/P). The master must be configured appropriately by the user (see documentation for JUMO AQUIS touch S/P).

Configuration data for measuring ranges 1 to 4

Configuration item	Selection/setting option	Explanation
Compensation	None, TC linear, TC curve, natural waters, natural waters with expanded temperature range, TDS, NaOH 0 to 12 % NaOH 25 to 50 % HNO_3 0 to 25 % HNO_3 36 to 82 % H_2SO_4 0 to 28 % H_2SO_4 36 to 85 % H_2SO_4 92 to 99 % HCl 22 to 44 % NaCl 0 to 25 % $MgCl_2$ 0 to 17.5 % $MgCl_2$ 18.5 to 25 %	Type of temperature compensation
Temperature coefficient	0.0 to 8.0 %/K	**applicable only to "TC linear" and "TDS" compensation** The temperature coefficient is a measure of the temperature dependence of the electrolytic conductivity of a liquid. It is used to compensate for the effect of temperature when measuring the electrolytic conductivity. If it is known, the temperature coefficient can be entered here or, if it is not yet known, determined by the calibration. ⇨ chapter 9.2 "Calibration methods for Ci conductivity sensors (inductive)", Page 47

Configuration item	Selection/setting option	Explanation
Unit (for calculation)[a]	µS/cm mS/cm **only without TDS:** kΩ×cm MΩ×cm	Unit in which the electrolytic conductivity is displayed when the parameter "Compensation" is set to "TDS" and/or the customer-specific linearization is active, the unit text set in the parameter "Unit" appears in the measured-value display instead of the unit for the electrolytic conductivity. The electrolytic conductivity in µS/cm or mS/cm multiplied by the TDS factor (see below in this table) yields the TDS measured value. The unit for the electrolytic conductivity is selected in the parameter "Unit for calculation" as the basis for the TDS calculation. Because of the text length, the parameter "Unit for calculation" appears only as "Unit" in the configuration of the device.
Unit[a]	up to 5 text characters	**only for TDS compensation or customer-specific linearization** Unit for the process variable to be displayed for TDS measurements or when using customer-specific linearization (e.g. ppm or mg/l) The unit must be edited with the JUMO DSM software. It is not possible to change texts on the unit.
Offset	-9999 to +9999	Correction value added to measured value
TDS factor	0.01 to 2.00	**only for TDS compensation:** Conversion factor from measured conductivity to display unit (see configuration item "Unit" in this table) for TDS compensation, see configuration item "Compensation" in this table
Linearization table	Yes No	The linearization table for the measuring range concerned can be activated/deactivated with this parameter. Linearization tables for JUMO digiLine Ci contain up to 30 value pairs in any measurement characteristic line. Each value pair assigns a display value (Y-column) to a measured value (X-column). A linearization table is available for every measuring range. Linearization tables are created/edited using the JUMO DSM software.

[a] Because of the text length, the parameter "Unit for calculation" appears only as "Unit" in the configuration menu of the device. The parameter "Unit" can only be set with the JUMO DSM software and is not listed in the configuration menu.

13.3.3 Temperature input

Configuration item	Selection/setting option	Explanation
Temperature input function	active inactive	**only device versions with a separate sensor:** Activation of the temperature input
Filter time const.	0.0 to 25.0 s	Optimization of measured value updating The larger the value of the filter time constant, the slower is the change in measured value at the output.
Offset	-10 to+10 °C	Correction value added to measured value

13 Configuration

13.4 CIP/SIP

NOTE!

Sensor monitoring requires plant-specific empirical values for the sensor stress caused by process conditions. Configure the sensor monitoring parameters on the basis of these empirical values.

CIP/SIP

Configuration item	Selection/setting option	Explanation
Minimum CIP temperature	-20 to+150 °C	Temperature thresholds for identifying CIP/SIP cycles If the CIP/SIP cycle takes place above one of these values for the set duration of a CIP/SIP cycle, the values identify a successfully completed CIP/SIP cycle and the CIP or SIP counter is incremented. The respective counter is reset only after the value has dropped below the CIP/SIP temperature.
Minimum SIP temperature		
CIP cycle duration	0 to 65535 s	Duration of a CIP/SIP cycle
SIP cycle duration		
CIP/SIP alarming	Inactive Active	Activates/deactivates the CIP/SIP alarm on reaching the maximum number of CIP/SIP cycles
Alarm limit value CIP cycles	0 to 999	Specifies the number of CIP/SIP cycles at which the CIP/SIP alarm and pre-alarm are triggered[a]
Alarm limit value SIP cycles		
Pre-alarm limit value CIP cycles		
Pre-alarm limit value SIP cycles		

[a] The counters for CIP and SIP cycles are automatically incremented by the JUMO digiLine electronics each time a CIP or SIP process is recognized on the basis of the configured CIP/SIP temperatures and duration of the CIP/SIP cycle.

13.5 Digital interface

NOTE!

The settings for the digital interface are obtained automatically in the JUMO digiLine mode and may then no longer be changed.

Ensure that interface settings are not changed inadvertently when using the JUMO DSM software. For operation on the JUMO mTRON T, the settings must be made in advance with the JUMO DSM software.

Configuration item	Selection/setting option	Explanation
Baud rate	9600 19200 38400	Transmission speed (symbol rate) of the RS485 interface

Configuration item	Selection/setting option	Explanation
Data format	8 - 1 - no parity 8 - 1 - odd parity 8 - 1 - even parity 8 - 2 - no parity	Transmission format of the RS485 interface
Floating Point	Standard IEEE754_LITTLE IEEE754_BIG	Selectable transmission format for float values (floating-point numbers)
Hardware address	-	non-configurable, permanently assigned address of the digiLine electronics for unique identification (required for plug & play)
Device address	1 to 247	Bus user identification for the digiLine electronics
Min. response time	0 to 500 ms	Minimum time from receipt of a query to sending of the response This parameter is used to adjust the response speed of the digiLine electronics to slower bus users.

13.6 Calibration timer

Calibration timer

Configuration item	Selection/setting option	Explanation
Calibration interval	0 to 9999 days	Time from one calibration to the next. The time at which a calibration is due is indicated by the calibration alarm on device versions with a display. In addition, the calibration alarm is displayed on the JUMO AQUIS touch S/P.

13 Configuration

13.7 Sensor stress

Configuration item	Selection/setting option	Explanation
Sensor stress	Inactive Active	Activates/deactivates the sensor stress alarm The "Sensor stress" value reflects the current level of stress on the sensor from high temperatures and high conductivity values. The following sensor stress alarm states are signaled on the device display (only on device versions with a display) on reaching the specified limit values: • Pre-alarm for sensor stress above sensor stress level 3 • Alarm for sensor stress above sensor stress level 7

13.8 Display

General information

Configuration item	Selection/setting option	Explanation
Language	German English French Spanish	Selects the operating language for the JUMO digiLine Ci As an alternative to manual configuration, the language setting can also be accessed by pressing the "OK" operating key for a longer period of time (see "Language selections on device versions with display", Page 46).
Automatic logoff time	0 to 15 min.	The automatic logoff time can be set here. The logged-in user is logged off as soon as no key has been pressed on the device during the set time. If the automatic logoff time is set to the value 0 s, then automatic logoff is inactive. The user then remains logged in until he logs off again or the device is restarted. ⇨ chapter 7.2.1 "Log-on/Log-out", Page 43
Display type	Standard display Large display Bargraph	In the normal and large display, 2 values are shown on the display in the measuring mode (main and secondary value). In the bargraph display, the main value is shown as a numerical value at the center in the measuring mode and visualized underneath as a bargraph display. In contrast to the normal and large display, the secondary value is not shown in this case. The value range of the main value for the bargraph can be set (see next table). The compensated conductivity is the main value and the temperature is the secondary value in the default setting. However, this setting can also be changed to meet your requirements (see further below in this table).
Temperature Unit	°C °F	Temperature unit setting for the device
Sign. main value	No signal Temperature input Compensation temp. Uncomp. conductivity Compens. Conductivity	Signal source for the main value display In the measuring mode, the main value is shown on the display as the central value (upper display value). The appearance of the display can be set in the display type (higher up in this table).

Configuration item	Selection/setting option	Explanation
Sig. sec. value	No signal Temperature input Compensation temp. Uncomp. conductivity Compens. Conductivity	Signal source for the secondary value display In the measuring mode, the secondary value is shown on the display as an additional value accompanying the main value (below the main value). The appearance of the display can be set in the display type (higher up in this table).

Measuring ranges 1 to 4

Configuration item	Selection/setting option	Explanation
Bargraph start	0 to < bargraph end	Measured value of the main value at the start of the bargraph display
Bargraph end	> bargraph start up to 9999	Measured value of the main value at the end of the bargraph display
Comma format	XXXX XXX.x XX.xx X.xxx	Number of desired decimal places The number of decimal places can be set from 0 to 3.

13 Configuration

14.1 Cleaning

The front of devices with plastic housings (front foil) can be cleaned with standard detergents, rinsing and cleaning agents.



CAUTION!

The front of devices with plastic housings is not resistant to aggressive acids and lyes or scouring agents.

Use of these media can cause damage to devices with plastic housing.

▶ Only clean the front of devices with plastic housing with suitable agents.

14.2 Sensor replacement on device versions with a separate sensor



NOTE!

Sensor replacement is not possible on JUMO digiLine electronics in device versions as a head transmitter. Here, replacement of the entire module with sensor and electronics is required.

Replacement of the sensor with retention of the JUMO digiLine electronics

On device versions with a separate sensor, the sensor can be disconnected from the JUMO digiLine electronics. If the sensor needs to be replaced, the JUMO digiLine electronics can be connected to a new sensor and re-inserted. The "Sensor replacement function" must be used in this case to reset the corresponding data in the JUMO digiLine electronics and increment the "sensor counter".

⇨ JUMO DSM software operating manual

Replacement, disconnection and reconnection of JUMO digiLine electronics

The replacement, disconnection, and reconnection of JUMO digiLine electronics to a JUMO digiLine bus system for maintenance purposes can be carried out with the bus master switched off or also during operation. When replacing JUMO digiLine electronics, the new JUMO digiLine electronics have to be put into operation on the JUMO digiLine master.

⇨ chapter 8 "Startup", Page 45

If the JUMO digiLine electronics is disconnected from the bus and then reconnected, it resumes service automatically. If "sensor information" or "interface configuration" were changed in the JUMO digiLine electronics prior to reconnection with the JUMO DSM software on the PC, ensure the following:

- In the Modbus mode, ensure that the interface configuration is correct. Otherwise, the electronics will not resume operation.
- In the JUMO digiLine mode, a change of the "sensor information" requires "linking" the JUMO digiLine electronics in the JUMO AQUIS touch S/P again (cf. chapter 8 "Startup", Page 45).



CAUTION!

Disconnecting the JUMO digiLine bus line and/or removing the terminating resistors and terminating connectors during operation will disrupt the digiLine bus.

Possible consequences include bus disruptions with loss of the measured values from the sensor on the bus affected.

▶ Before the bus cabling is changed, it is necessary to take measures that ensure safe operation of the system if sensors fail on the JUMO digiLine bus.

14.2.1 Sensor replacement while the digiLine mode is active

Disconnection and reconnection of sensors with JUMO digiLine electronics while the JUMO digiLine bus is active

If sensors with JUMO digiLine electronics are disconnected from the JUMO digiLine bus for cleaning or calibration while the system is operating and then reconnected with no changes to the interface configuration, the JUMO AQUIS touch S/P detects the sensors again and links them automatically. The sensors then resume service automatically.

Replacement of sensors with JUMO digiLine electronics while the JUMO digiLine bus is active

If **an individual sensor** with JUMO digiLine electronics is replaced with a new sensor of the same kind, it is linked automatically and assigned in the JUMO AQUIS touch S/P to the previous function of the removed sensor. When several sensors are being replaced, it is necessary to ensure that multiple sensors with JUMO digiLine electronics are not disconnected from the bus at the same time. If several sensors with JUMO digiLine electronics are disconnected from a JUMO digiLine bus, the individual replacement electronics may not be linked automatically and renewed assignment to inputs for digital sensors is required for each new JUMO digiLine electronics. It is therefore advisable to replace sensors with JUMO digiLine electronics in succession.

When replacing sensors with JUMO digiLine electronics, proceed as follows:

1. Disconnect **a single** JUMO digiLine electronics from the bus.

NOTE!

Ensure that, besides the JUMO digiLine electronics to be replaced, no others are disconnected from the bus until the JUMO digiLine electronics of the replacement sensor have been connected and put into service. This could lead to problems with the automatic linking of the new JUMO digiLine electronics in the JUMO AQUIS touch S/P.

2. Connect the JUMO digiLine electronics of the replacement sensor.
3. If the old and replacement electronics are identical in terms of sensor type, the JUMO AQUIS touch S/P can automatically assign the previous function of the old sensor to the replacement electronics and link it automatically.
4. Check on the JUMO AQUIS touch S/P whether the new JUMO digiLine electronics of the new sensor has been linked and resumed service. The procedure is described in the operating manual and installation instructions of the JUMO AQUIS touch S/P.

When several sensors with JUMO digiLine electronics need to be replaced, follow this procedure for each individual sensor separately.

NOTE!

The terms "Linking" and "Sensor scan" mentioned here are steps in the startup of JUMO digiLine electronics. For a more detailed explanation, see chapter 8 "Startup", Page 45

14.2.2 Sensor replacement while the Modbus mode is active

Disconnection and reconnection of sensors with JUMO digiLine electronics while the Modbus mode is active

If sensors with JUMO digiLine electronics are disconnected from the Modbus system for cleaning or calibration while the system is operating and then reconnected, always ensure that the interface configuration was not changed. In contrast to JUMO digiLine, Modbus does not support plug & play and cannot configure the interface automatically. It is also necessary to ensure that the user is in possession of all parameters that can be written over the Modbus. The automatic linking and installation available with JUMO digiLine do not exist here. A detailed description of the Modbus functionality of JUMO digiLine electronics can be found in the description of its Modbus.

15.1 RS485 interface for JUMO digiLine or Modbus RTU

Protocol	JUMO digiLine[a] or Modbus RTU[b]
Device address	1 to 247
Data formats[c]	8 - 1 - no parity 8 - 2 - no parity 8 - 1 - odd parity 8 - 1 - even parity
Baud rates	9600 baud 19200 baud 38400 baud
adjustable minimum response time	0 to 500 ms

[a] The JUMO digiLine protocol assigns the interface parameters automatically during startup (Plug & Play).

[b] The Modbus RTU protocol is used to operate the JUMO digiLine electronics on a JUMO mTRON T CPU. For operation on a JUMO mTRON T, the interface parameters must be set prior to initial commissioning with the JUMO DSM software.

[c] Specification in useful bit - stop bit - parity format.

15.2 Analog inputs (sensor connection side)

Input for temperature sensor

Measuring range	
Pt100	-50 to +250 °C
Pt1000	-50 to +250 °C
Connection types	Two-wire
Measuring accuracy	±0.25 % of MR[a]
Ambient temperature influence	0.1 % / 10 K
Sampling rate	500 ms

[a] MR: measuring range span

Input for Ci conductivity sensor

Units	µS/cm mS/cm kΩ × cm MΩ × cm
Display ranges[a]	0.000 to 9.999 00.00 to 99.99 000.0 to 999.9 0000 to 9999

15 Technical data

Temperature compensation	TC linear[b] for -50 to +250 °C TC curve[b] for -20 to +150 °C TDS[c] for -50 to 250 °C Natural water DIN EN 27888 for 0 to 36 °C Natural water with expanded range for 0 to 100 °C NaOH 0 to 12 % for 0 to 90 °C NaOH 25 to 50 % for 10 to 90 °C HNO_3 0 to 25 % for 0 to 80 °C HNO_3 36 to 82 % for-20 to +65 °C H_2SO_4 0 to 28 % for -17 to +104 °C H_2SO_4 36 to 85 % for -17 to +115 °C H_2SO_4 92 to 99 % for -17 to +115 °C HCL 0 to 18 % for 10 to 65 °C HCL 22 to 44 % for -20 to +65 °C NaCl 0 to 25 % for-10 to +40 °C $MgCl_2$ 0 to 17.5 % for -10 to +40 °C $MgCl_2$ 18.5 to 25 % for -10 to +40 °C
Measuring accuracy 0.000 to 1.000 mS 1.001 bis 10.00 mS 10.01 to 100.0 mS 100.1 to 1000 mS 1001 to 2000 mS	 ±1.5 % of the MRE[d] ±1 % of the MRE[d] ±1 % of the MRE[d] ±1 % of the MRE[d] ±1.5 % of the MRE[d]
Cell constant	4 to 8 cm^{-1}
Measuring range selection	4 configurable measuring ranges
Ambient temperature influence	0.1 % / K
Sampling rate	500 ms

[a] The measuring/display range is scalable. The decimal place is user configurable.

[b] TC: temperature coefficient

[c] TDS (**T**otal **D**issolved **S**olids)

[d] MRE: Measuring range end value

15.3 Electrical data

Device versions with RS485 interface

Voltage supply[ab]	DC 5 V ±10 % or DC 24 V ±25 % For operation on ships, only the power supply with DC 24 V is permissible!
Power/current consumption	< 1,5 W
Electromagnetic compatibility (EMC)	
for all device versions	DIN EN 61326-1
for head transmitters only	DIN EN 61326-2-3
Interference emission	Class B[c]
Interference immunity	Industrial requirements
Protection rating	Protection rating III

[a] The voltage supply for the JUMO digiLine electronics must be provided with SELV or PELV and must meet the requirements for energy-limited electrical circuits to DIN EN 61010-1.

[b] The power supply current must be limited to 2 A. If the voltage supply allows higher current consumption, a fuse must be provided.

[c] The product is suitable for industrial use as well as for households and small businesses.

15.4 Case

Plastic housing material	Plastic (ABS)
Stainless steel case material	1.4301
Protection type	IP66, IP67, IP69K
Operating position	any, with due consideration for the viewing angle of the display

15.5 Environmental influences

15.5.1 Device version as head transmitter

Ambient temperature	-20 to +60 °C
Storage temperature	-25 to +80 °C
Site altitude	Max. 2000 m (6562 ft) above sea level
Shock resistance	DIN EN 60654-3
Acceleration	40 m/s^2
Dur.	Duration 5 ms
Vibration resistance for device versions with **plastic housing**	IEC 61298-3
Frequency range	10 to 1000 Hz
Amplitude	0.35 mm
Acceleration	50 m/s^2
Vibration resistance for device versions with **stainless steel case**	IEC 61298-3
Frequency range	10 to 1000 Hz
Amplitude	0.15 mm
Acceleration	20 m/s^2

Resistance to climatic conditions	Climate class 4K4H to EN 60721-3-4 Relative humidity ≤ 100 % condensing

15.5.2 Device version with separate sensor

Ambient temperature	-20 to +60 °C
Storage temperature	-25 to +80 °C
Site altitude	Max. 2000 m (6562 ft) above sea level
Shock resistance	DIN EN 60654-3
Acceleration	40 m/s^2
Dur.	Duration 5 ms
Vibration resistance	IEC 61298-3
Frequency range	10 to 150 Hz
Amplitude	0.75 mm
Acceleration	2 m/s^2
Resistance to climatic conditions	Climate class 4K4H to EN 60721-3-4 Relative humidity ≤ 100 % condensing

15.6 Approvals

15.6.1 Head transmitter (202761)

DNV	
Test facility	DNV
Certificate/test no.	Approval submitted
Inspection basis	Class Guideline DNV-CG-0339
Valid for	Type 202761 with plastic housing, sensor type 30 and process connection 168 or 110
c UL us	
Test facility	Underwriters Laboratories
Certificate/test no.	E201387
Inspection basis	UL 61010-1 (3rd Edition), CAN/CSA-C22.2 No. 61010-1-12 (3rd Edition)
Valid for	Type 202761 with plastic housing, sensor type 10 and process connection 108 or 110 Type 202761 with plastic housing, sensor type 30 and process connection 168 or 169
GOST	
Test facility	-
Certificate/test no.	Approval submitted
Inspection basis	IEC 60079-0, IEC 60079-1
Valid for	-
EAC	
Test facility	RU
Certificate/test no.	Approval submitted
Inspection basis	IEC 60079-0, IEC 60079-1
Valid for	-

15.6.2 Devices for separate sensor (202760)

c UL us	
Test facility	Underwriters Laboratories
Certificate/test no.	E201387
Inspection basis	UL 61010-1 (3rd Edition), CAN/CSA-C22.2 No. 61010-1-12 (3rd Edition)
Valid for	All versions with plastic housing
GOST	
Test facility	-
Certificate/test no.	Approval submitted
Inspection basis	IEC 60079-0, IEC 60079-1
Valid for	-
EAC	
Test facility	RU
Certificate/test no.	Approval submitted
Inspection basis	IEC 60079-0, IEC 60079-1
Valid for	-

15 Technical data

15.7 Sensor properties in head transmitters

The technical data for each of the sensors for the individual device versions, which are combined with the head transmitter, must be obtained from their data sheets. The relevant sensor types for the individual device versions of the JUMO digiLine Ci can be obtained from the following table.

JUMO digiLine Ci device versions	Sensor data sheet
202761 with sensor type 10	202941
202761 with sensor type 20	202942
202761 with sensor type 30	202943 (data for sensors 202943/10 and 202943/20 are relevant)
202761 with sensor type 40	202943 (data for sensor 202943/30 are relevant)



CAUTION!

In the case of head transmitters, heat emitted from the system can exceed the admissible ambient temperature of the head transmitter.

Make sure that the head transmitter used is operated within the limits of its technical data.

▶ Observe the specifications on the data sheet! It may be necessary to select a device version with a separate sensor and mount the transmitter at an adequate distance from the heat source.

16.1 China RoHS

	JUMO More than sensors + automation					
产品组别 Product group: 202760 – 202769	产品中有害物质的名称及含量 China EEP Hazardous Substances Information					
部件名称 Component Name						
	铅 (Pb)	汞 (Hg)	镉 (Cd)	六价铬 (Cr(VI))	多溴联苯 (PBB)	多溴二苯醚 (PBDE)
外壳 Housing (Gehäuse)	X	○	○	○	○	○
过程连接 Process connection (Prozessanschluss)	○	○	○	○	○	○
螺母 Nuts (Mutter)	○	○	○	○	○	○
螺栓 Screw (Schraube)	○	○	○	○	○	○

本表格依据SJ/T 11364的规定编制。
This table is prepared in accordance with the provisions SJ/T 11364.
○：表示该有害物质在该部件所有均质材料中的含量均在GB/T 26572规定的限量要求以下。
Indicate the hazardous substances in all homogeneous materials' for the part is below the limit of the GB/T 26572.

×：表示该有害物质至少在该部件的某一均质材料中的含量超出GB/T 26572规定的限量要求。
Indicate the hazardous substances in at least one homogeneous materials' of the part is exceeded the limit of the GB/T 26572.

16 Annex

JUMO GmbH & Co. KG
Street address:
Moritz-Juchheim-Straße 1
36039 Fulda, Germany
Delivery address:
Mackenrodtstraße 14
36039 Fulda, Germany
Postal address:
36035 Fulda, Germany
Phone: +49 661 6003-0
Fax: +49 661 6003-607
Email: mail@jumo.net
Internet: www.jumo.net

JUMO UK LTD
JUMO House
Temple Bank, Riverway
Harlow, Essex, CM20 2DY, UK
Phone: +44 1279 63 55 33
Fax: +44 1279 62 50 29
Email: sales@jumo.co.uk
Internet: www.jumo.co.uk

JUMO Process Control, Inc.
6724 Joy Road
East Syracuse, NY 13057, USA
Phone: +1 315 437 5866
Fax: +1 315 437 5860
Email: info.us@jumo.net
Internet: www.jumousa.com