JUMO CTI-750

Inductive Conductivity/Concentration and Temperature Transmitter with Switch Contacts



Operating manual

20275616T90Z001K000

V4.00/EN/00488788

WARNING!

A sudden failure of the instrument or of a sensor connected to it could result in dangerous overdosing. Please take suitable precautionary measures for this case.

NOTE!

All the nececssary settings are described in this manual. However, if any difficulties should arise during start-up, please do not carry out any unauthorized manipulations. You could endanger your righs under the instrument warranty!

NOTE!

Resetting the LC display
If the brightness/contrast setting is such that the text in the display is not readable, the basic setting can be restored as follows:

* Switch off the supply voltage.
* Switch on the supply voltage and immediately keep the keys ▼ and ▲ held down.

Resetting the operating language to "English"
If the operating language has been set and you cannot understand the text of the display, the language can be set to "English" with the Administrator password 7485. Thereafter, the desired language can be set in ADMINISTRATOR LEVEL / DEVICE DATA / .... .

Contents

1 Typographical conventions 5

1.1 Warning signs 5

1.2 Note signs 5

2 General 6

2.1 Foreword 6

2.2 Structure 6

3 Inductive conductivity measurement 8

3.1 Range of Applications 8

3.2 Function 9

4 Identifying the device version 10

4.1 Nameplate 10

4.2 Order details 11

5 Device description 15

5.1 **Technical data** 15

6 Mounting 19

6.1 General 19

6.2 Dimensions head transmitter 20

6.3 The device with separate sensor 24

6.4 Mounting examples 30

7 Installation 33

7.1 **General** 34

7.2 Electrical connection 35

8 Setup-Program 39

8.1 Function 39

9 Commissioning 40

9.1 Head transmitter or transmitter with separate sensor 40

9.2 Replacement sensor 40

10 Operation 41

Contents

10.1 Operating elements 41
10.2 Operation principle 43
10.3 Principle 45
10.4 Measurement mode 46
10.5 Operating level 46
10.6 Administrator level 54
10.7 Calibration level 56
10.8 The desalination function 57

11 Calibration 61

11.1 General 61
11.2 Calibration of the relative cell constant 61
11.3 Calibration of the temperature coefficient of the measurement solution ...63

12 Maintenance 71

12.1 Conductivity-clean sensor 71

13 Rectifying errors and faults 72

13.1 Device checking 73

14 Annex 78

14.1 Before configuring 78

15 China RoHS 83

16 Index 84

1.1 Warning signs



DANGER!

This symbol is used when there may be **danger to personnel** if the instructions are ignored or not followed correctly!



CAUTION!

This symbol is used when there may be **damage to equipment or data** if the instructions are ignored or not followed correctly!

1.2 Note signs



NOTE!

This symbol is used when your **special attention** is drawn to a remark.

abc[1]

Footnote

Footnotes are remarks that **refer to specific points** in the text. Footnotes consist of two parts:

A marker in the text, and the footnote text.

The markers in the text are arranged as continuous superscript numbers.

✱

Action instruction

This symbol indicates that an **action to be performed** is described.

The individual steps are marked by this asterisk.

Example:

✱ Remove crosspoint screws.

2 General

2.1 Foreword

Please read the operating manual before you commission the device. Store the operating manual at a place that is accessible for all users at all times.

NOTE!

All the required settings are described in this manual. Should there be any difficulties nonetheless at the time of commissioning, we request you not to carry out any impermissible manipulations. You could render your warranty entitlement null and void!

Please get in touch with the nearest branch or with the head office.

2.2 Structure

2.2.1 Head transmitter

Example

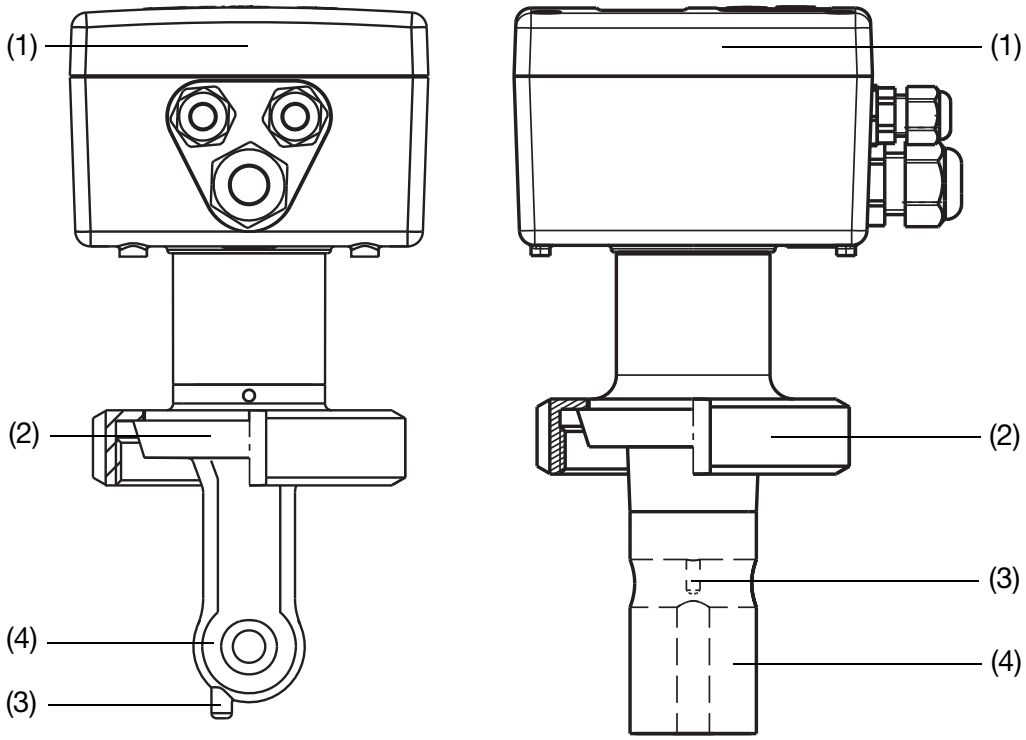

(1) Transmitter (with or without graphics LC-display)
(2) Process connection
(3) Temperature sensor
(4) Inductive conductivity measuring probe

2.2.2 Transmitter with separate sensor

Example

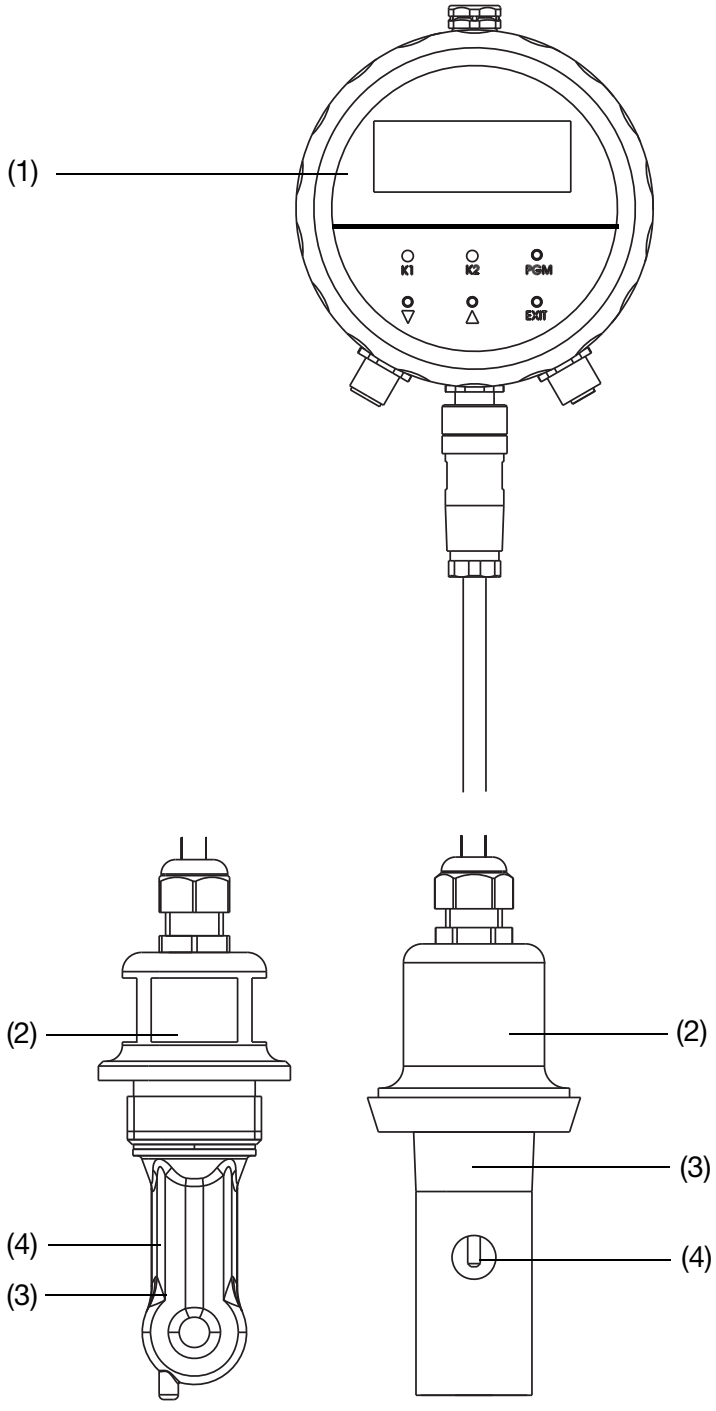

(1) Transmitter (with or without graphics LC-display)
(2) Process connection
(3) Temperature sensor
(4) Inductive conductivity measuring probe

3 Inductive conductivity measurement

3.1 Range of Applications

General

The inductive measurement process allows a mostly maintenance-free acquisition of the specific conductivity even in difficult medium conditions. In contrast to the conductive measurement process, problems like electrode replacement and polarization do not occur.

Brief description

The device is used for the measurement/control of the conductivity/concentrations of liquid media. Using it is particularly recommended in media in which significant deposits from carried dirt, oil grease or of lime and gypsum are expected. The integrated temperature measurement makes exact and fast temperature compensation possible, which is particularly important for the measurement of the conductivity. Additional functions such as the combined switching of the measurement range and temperature coefficient make possible the optimum use in case of CIP-processes.

Two integrated switching outputs can be freely programmed for limit value monitoring or conductivity/concentration and/or temperature. In addition, alarm and control tasks (desalination) can be assigned.

Operation is either via a membrane keyboard and a plain text graphical display (user language can be changed) or via a comfortable PC-Setup program. By simply turning the housing cover, reading the display is possible both in case of installation in vertical or horizontal pipes. By means of the Setup program, the device configuration data can also be saved and printed for plant documentation purposes. To prevent manipulation, the device can also be supplied without a keyboard/display. In this case, the Setup program is required for programming.

The transmitter can be supplied as a combine device (transmitter and measuring cell in one device) or as a shouldered version (transmitter and measuring cell connected by cables). The separate version is particularly suitable for plants with intense vibrations and/or intense temperature radiation at the measurement location or for installation at not easily accessible places.

Typical usage fields

- CIP-cleaning (CIP = **C**lean **I**n **P**lace/**P**rocess)
- Concentration monitoring or chemical dosing
- Foodstuffs beverages and pharmaceutical industries
- Product monitoring (phase separation, Product/Product mixture/ Water) in the beverage industry, breweries, dairies
- Control (e.g. phase separation of cleaners/rinsing water of cleaning processes e.g. bottle cleaning plants and in case of container cleaning)

3.2 Function

of the transmitter

The device is conceived for use at the location. A robust housing protects the electronics and the electrical connections from aggressive ambient influences (system of protection IP67). In the standard version, the device has one analog signal input for the conductivity/concentration and the temperature. The further processing of the standard signals can take place in suitable display/control devices or, e.g. directly in a PLC.

The output signals are galvanically separated from one another and from the measurement medium.

of the measuring cell

The measurement of the conductivity takes place with an inductive probe. A sinusoidal AC is supplied to the transmitting coil. Depending on the conductivity of the liquid to be measured, a current is induced in the receiver coil. The current is proportional to the conductivity of the medium. The cell constant of the inductive probe is geometry-dependent. In addition, the cell constant can be influenced by parts in its immediate vicinity.

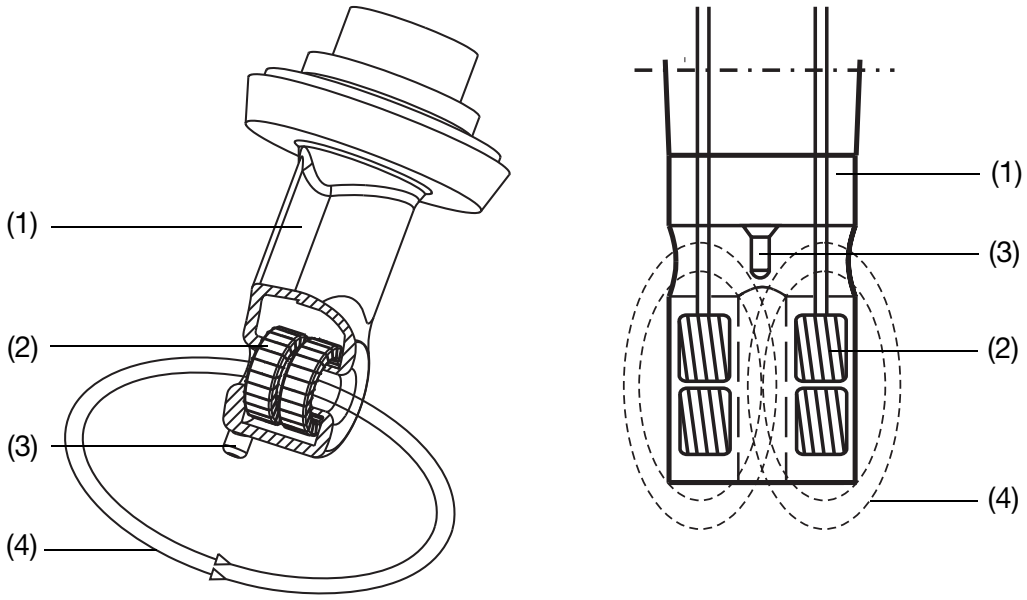

(1) Plastic body
(2) Coils
(3) Temperature sensor
(4) Fluid loop

4 Identifying the device version

4.1 Nameplate

On the transmitter

The nameplate is affixed to the case.

On the separate sensor

The nameplate (flag tag) is affixed to the connecting cable.

Contents

The nameplate contains important information. This includes:

Description	Description on the nameplate	Example
Device type	Typ	202756/16-607-0000-82/ 767,941
Fabrication number	F-Nr	0220565701018110001
Voltage supply	-	DC 19 ... 31 V

Device type (Typ)

Compare the specifications on the nameplate with the order.
Identify the supplied device version using the order details (order code).

Fabrication number (F-Nr)

Among other things, the fabrication number contains the date of production (year/week).
Example: F-Nr = 022056570101**811**0001
The characters in question are in positions 12 to 15 (from the left).
The device was therefore produced in the year 20**18** in its **11**th calendar week.



For devices with a separate sensor, the transmitter and detached sensor are matched to one another at the factory!
When connecting the components, please note that the serial number of the external sensor (marked on the flag tag attached to the connecting cable) must match the serial number marked on the nameplate of the transmitter!

4.2 Order details

4.2.1 The device as "Head transmitter"

	(1)	Basic type
202756/10		JUMO CTI-750 head transmitter in plastic housing, without display/keypad[a]
202756/15		JUMO CTI-750 head transmitter in plastic housing, with display/keypad
202756/16		JUMO CTI-750 head transmitter in stainless steel housing, with display/keypad
	(2)	**Process connection**
108		Screw connection G 1 ½ A
110		Screw connection G 2 A
607		Taper socket with union nut DN 50 DIN 11851 (dairy pipe fitting)
608		Taper socket with union nut DN 65 DIN 11851 (dairy pipe fitting)
609		Taper socket with union nut DN 80 DIN 11851 (dairy pipe fitting)
617		Clamping socket (Clamp) 2 ½"[b], similar to DIN 32676
686		VARIVENT® connection DN 50/40 [b, c, d]
690		SMS DN 2"
	(3)	**Insertion length**
0000		See “Dimensions for head transmitter"
	(4)	**Electrical connection**
82		Cable glands[e]
83		M12 plug/socket connectors (instead of the cable glands)[f]
84		Two M16 cable glands and one blanking plug[g]
	(5)	**Extra code**
268		Internal temperature sensor
767		Cell material PEEK[h]
768		Cell material PVDF[i]
844		Supply voltage 24 V AC
941		Hygienic design

[a] The PC setup program is required for programming the device, see accessories.
[b] Mounting items (mounting brackets) not included in delivery.
[c] Only in conjunction with extra code 767 (cell material PEEK).
[d] Hygienic process connection.
[e] Not for basic type 202756/16.
[f] If required, order 1 set M12 plug/socket connectors, part no. 00529482.
[g] Standard on basic type extension 16.
[h] Temperature sensor always internal.
[i] Not in combination with extra code 941.

	(1)		(2)		(3)		(4)		(5)	
Order code		/		-		-		/		, ...[a]
Order example	202756/10	/	607	-	0000	-	82	/	767	

[a] List extra codes in sequence, separated by commas.

4.2.2 The device as "Transmitter with separate sensor"

	(1)	**Basic type extension**
202756/20		JUMO CTI-750 transmitter in plastic housing, without display/keypad (without sensor) [a, b]
202756/25		JUMO CTI-750 transmitter in plastic housing, with display/keypad (without sensor) [b]
202756/26		JUMO CTI-750 transmitter in stainless steel housing, with display/keypad (without sensor) [b]
202756/60		JUMO CTI-750 transmitter in plastic housing, without display/keypad (with sensor) cable length 10 m [a]
202756/65		JUMO CTI-750 transmitter in plastic housing, with display/keypad (with sensor) cable length 10 m
202756/66		JUMO CTI-750 transmitter in stainless steel housing, with display/keypad (with sensor) cable length 10 m
202756/80		JUMO CTI-750 replacement sensor with 10 m cable for transmitter in plastic housing (without transmitter)[b, c]
202756/85		JUMO CTI-750 replacement sensor with 10 m cable for transmitter in stainless steel housing (without transmitter)[b, c]
	(2)	**Process connection**
000		Without process connection
108		Screw connection G 1 ½ A
110		Screw connection G 2 A
607		Taper socket with union nut DN 50 DIN 11851 (dairy pipe fitting)
608		Taper socket with union nut DN 65 DIN 11851 (dairy pipe fitting)
609		Taper socket with union nut DN 80 DIN 11851 (dairy pipe fitting)
617		Clamping socket (Clamp) 2 ½"[c], similar to DIN 32676
686		VARIVENT® connection DN 50/40 [c, d, e]
690		SMS DN 2"
706		Immersion model[f]
	(3)	**Insertion length** (see "Dimensions for separate sensor")[f]
0000		Not available
0500		500 mm
1000		1000 mm
1500		1500 mm
2000		2000 mm
xxxx		Special length (in 250 mm increments, e.g. 0250, 0750, 1250, 1750)
	(4)	**Electrical connection**
21		Fixed cable with M12 socket connector on separate sensor[g]
82		Cable glands on the operating unit
83		M12 plug/socket connectors on operating unit
	(5)	**Extra code**
000		No extra code
268		Internal temperature sensor
767		Cell material PEEK[h]

768		Cell material PVDF[i]
844		Supply voltage 24 V AC
941		Hygienic design

[a] The PC setup program is required for programming the device, see accessories.
[b] A calibration kit is absolutely essential for commissioning. If not available, please include in your order (see accessories).
[c] Mounting items (mounting brackets) not included in delivery.
[d] Only in conjunction with extra code 767 (cell material PEEK).
[e] Hygienic process connection.
[f] Only in conjunction with extra code 768 (cell material PVDF).
[g] Only for basic types 202756/80 and /85.
[h] Temperature sensor always internal.
[i] Not in combination with extra code 941.

	(1)		(2)		(3)		(4)		(5)	
Order code		/		-		-		/		, ...[a]
Order example	202756/65	/	607	-	0000	-	82	/	000	

[a] List extra codes in sequence, separated by commas.

4 Identifying the device version

Accessories

Type	Part No.
Flange DN 32, material: PP	00083375
Flange DN 50, material: PP	00083376
Weld-on threaded adapter DN 50, DIN 11851	00085020
Ring nut DN 50, DIN 11851	00343368
Ring nut SMS DN 2“, Mutter	00345162
M12 plug connector, 8-pole, straight, for assembly by user	00444307
M12 socket connector, 8-pole, straight, for assembly by user	00486503
M12 socket connector, 8-pole, straight, for assembly by user	00444312
M12 socket connector, 5-pole, straight, for assembly by user	00444313
Connector set (TN 00444307 and TN 00444313) for 202755/202756 (PG209791)	00529482
Cover with LC-display and keyboard	00443725
Cover with LC-display and keyboard for VA-version	00525488
DIN rail mounting set	00459903
Pipe installation kit	00515128
Switching mode power supply, type PS5R-A24 for DIN rail mounting; Input voltage 100 ... 240 V AC	00374661
Adjustment set (for calibrating a replacement transmitter)	00459436
PC interface (USB/TTL), 2 adapter setup cable	00456352

Software

Type	Part No.
Setup	00454710

5.1 Technical data

5.1.1 Conductivity transmitter

A/D converter	
Resolution	15 bits
Sampling time	500 ms = 2 measurements/s
Power supply	For SELV and PELV circuit operation only.
Standard	19 - 31 V DC (24 V DC nominal)
Residual ripple	<5 %
Reverse polarity protection	yes
Extra code 844	24 V DC ±10 %, 50 - 60 Hz
Power draw	
with display	≤ 3 W
without display	≤ 2,6 W
Contact rating of the PhotoMOS® relay	
Voltage	≤ DC 45 V; ≤ AC 30 V
Current	≤ 200 mA
Electrical connection	
82	Cable glands/pluggable screw terminals, 2,5 mm^2
83	M12 plug/socket (instead of cable glands)
84	Two M16 cable glands and a pluggable screw terminal blanking plug, 2,5 mm^2
Display	
Basic type extension 10	without dsplay
Basic type extension 15	Backlit graphic LCD; adjustable contrast; dimensions: 62 mm × 23 mm
Basic type extension 16	Backlit graphic LCD; adjustable contrast; dimensions: 62 mm × 23 mm
Permissible ambient temperature	5 to +50 °C; max. rel. humidity. 93 %, no condensation
Permissible storage temperature	-20 to +75 °C; max. rel. humidity. 93 %, no condensation
Protection rating[a]	IP67
Electromagnetic compatibility[b]	
Interference emission	Class B
Interference immunity	to industrial requirements
Housing	
Basic type extensions 10, 15, 20, 25, 60, 65	PA
Basic type extensions 16, 26, 66	Stainless steel 1.4305 (AISI 303)
Weight[c]	approx. 0,3 - 2,4 kg

[a] DIN EN 60529
[b] DIN EN 61326
[c] Dependent on version and process connection

5.1.2 Measuring ranges

There is a choice of four different measuring ranges. Any one of these ranges can be activated by an external switch or by a PLC.

NOTE!

The overall accuracy is composed of transmitter accuracy + sensor accuracy.

Transmitter measuring ranges[a]	**Accuracy** (as % of measuring range span)
0 - 500 µS/cm	≤ 0,5 %
0 - 1000 µS/cm	
0 - 2000 µS/cm	
0 - 5000 µS/cm	
0 - 10 mS/cm	
0 - 20 mS/cm	
0 - 50 mS/cm	
0 - 100 mS/cm	
0 - 200 mS/cm	
0 - 500 mS/cm	
0 - 1000 mS/cm	
0 - 2000 mS/cm[b]	
Concentration measurement	implemented in the device software
NaOH (caustic soda)	0 - 15 % by weight or 25 - 50 % by weight (0 - 90 °C)
HNO_3 (nitric acid)	0 - 25 % by weight or 36 - 82 % by weight (0 - 80 °C)
Customer-specific concentration curve	freely programmable via the setup program (see "Special functions")
Calibration timer	0 - 999 days (0 = OFF)
Output signal conductivity and concentration[c]	0 - 10 V or 10 - 0 V 2 - 10 V or 10 - 2 V 0 - 20 mA or 20 - 0 mA 4 - 20 mA or 20 - 4 mA
Burden	
at current output	≤ 500 Ω
at voltage output	≥ 2k Ω
Ambient temperature effect	≤ 0,1 %/K
Analog output at "Alarm"	
Low	0 mA/0 V/3.4 mA/1.4 V or a fixed value
High	22.0 mA/0.7 V or a fixed value

[a] Typical application starting at approx. 100 µS/cm.
[b] Not temperature compensated.
[c] The output signal is freely scalable.

5.1.3 Temperature transmitters

Temperature acquisition[a]	Manually, -20.0 to 25.0 to 150 °C or °F, or automatically
Measuring range	-20 - 150 °C or °F
Characteristic	linear
Accuracy	≤ 0.5 % of the measuring range
Ambient temperature effect	≤ 0.1 %/K
Output signal	0 - 10 V or 10 - 0 V 2 - 10 V or 10 - 2 V 0 - 20 mA or 20 - 0 mA 4 - 20 mA or 20 - 4 mA The output signal is freely scalable in the -20 to +200°C range.
Burden at current output at voltage output	 ≤ 500 Ω ≥ 2k Ω
Analog output at "Alarm" Low High	 0 mA/0 V/3.4 mA/1.4 V or a fixed value 22.0 mA/10.7 V or a fixed value

[a] Take the permissible sample medium temperature into consideration!

5.1.4 Temperature compensation

Reference temperature	15 to 30 °C, adjustable
Temperature coefficient	5.5 %/°C, adjustable
Compensation range	-20 to 150 °C
Function	linear or natural water (EN 27888) or non-linear (learning function, see Special functions

5.1.5 Inductive conductivity sensor

Measuring range[a]	**Accuracy** (as % of measuring range span)
0 - 500 µS/cm	≤ 1 %
0 - 1000 µS/cm	≤ 1 %
0 - 2000 µS/cm	≤ 0,5 %
0 - 5000 µS/cm	≤ 0,5 %
0 - 10 mS/cm	≤ 0,5 %
0 - 20 mS/cm	≤ 0,5 %
0 - 50 mS/cm	≤ 0,5 %
0 - 100 mS/cm	≤ 0,5 %
0 - 200 mS/cm	≤ 0,5 %
0 - 500 mS/cm	≤ 0,5 %
0 - 1000 mS/cm	≤ 1 %
0 - 2000 mS/cm[b]	≤ 1 %
Material	
for extra code 767	PEEK
for extra code 768	PVDF
Permissible sample medium temperatures	-10 - +120 °C, briefly +140 °C (sterilization)
Pressure	max. 10 bar

[a] Typical application starting at approx. 100 µS/cm.
[b] Not temperature compensated



NOTE!

The temperature, pressure and sample medium affect the service the service life of the measuring cell!

6.1 General

6.1.1 Installation location

Ensure easy accessibility for subsequent calibration.

The fastening must be secure and low-vibration.

Avoid direct sunlight.

It is necessary to pay attention to a good flow through and around the sensor (2).

When installing in a pipe, a minimum distance of 20 mm must be maintained from the sensor to the pipe wall.
If these minimum distances cannot be maintained, the parameter "Mounting factor" can be used to achieve limited equalization.

In immersion operation in a basin, an installation location that is representative for the typical conductivity or concentration must be provided.

6.1.2 Mounting location

The Type 202756 can be mounted in any position.

The display can be adjusted according to the mounting direction by means of a captive fastening screw..

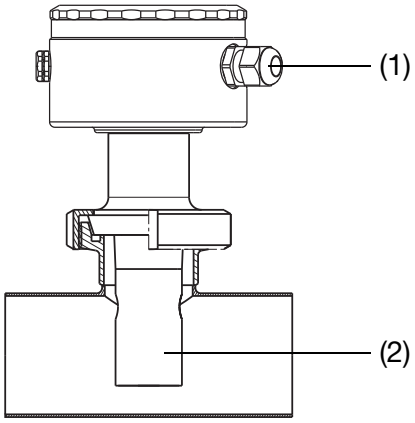

CAUTION!

When using head transmitters the Pg screw connections (1) must point in the direction of the flow!

For separate conductivity sensors the direction of the flow is labelled by a dot on the upper part of the sensor.
This dot must point towards the direction of the flow!

6.1.3 Screwing in and unscrewing the separate sensor

CAUTION!

No cable twisting should occur.
Avoid tensile forces on the cable, especially jerky pulling.

6.2 Dimensions head transmitter

6.2.1 Process connections

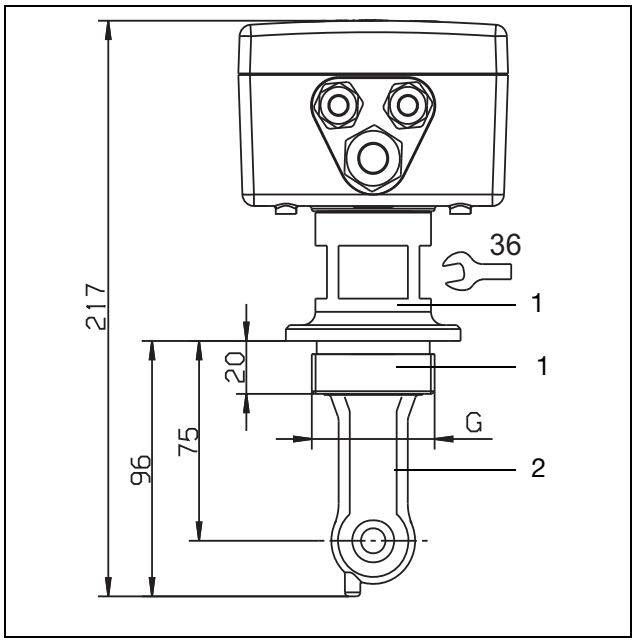

Version with process connection
108 = screw-in thread G 1 1/2 A
110 = screw-in thread G 2 A
and extra code 767

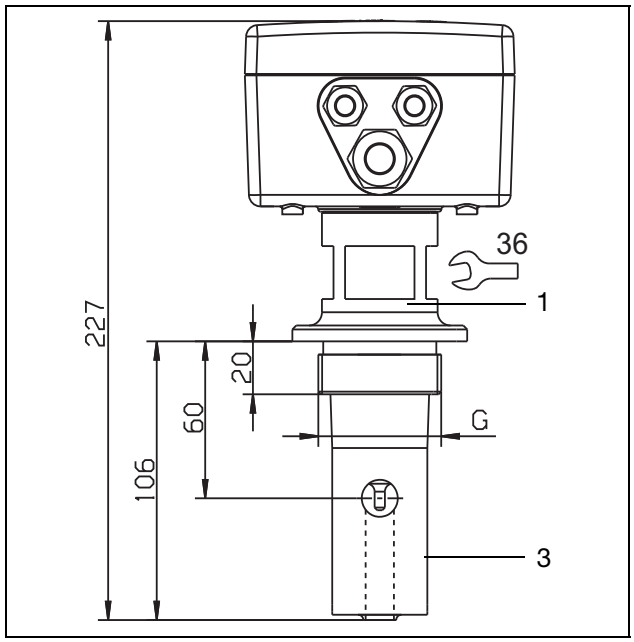

Version with process connection
107 = screw-in thread G 1 1/4 A
108 = screw-in thread G 1 1/2 A
110 = screw-in thread G 2 A
and extra code 768

1 = stainless steel 1.4301 2 = PEEK 3 = PVDF

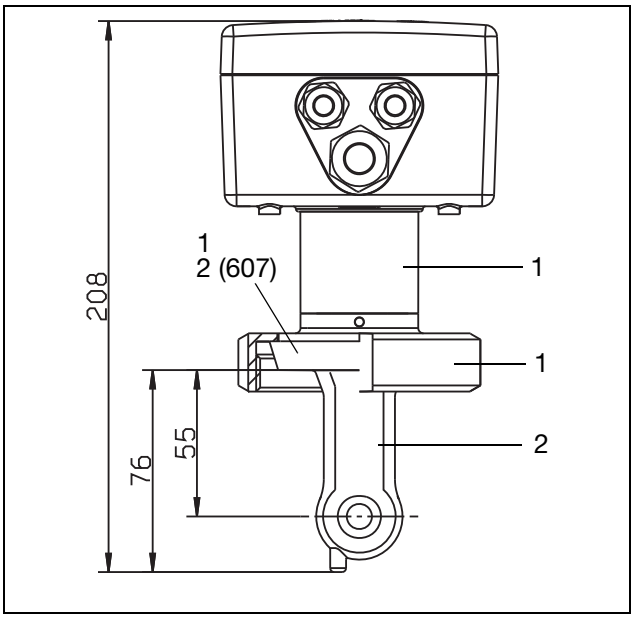

Version with process connection
607 = MK DN 50
608 = MK DN 65
609 = MK DN 80
and extra code 767

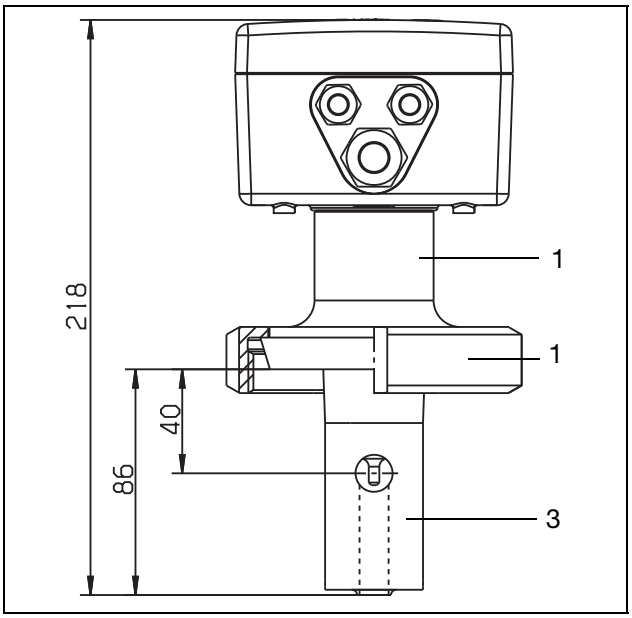

Version with process connection
606 = MK DN 40
607 = MK DN 50
608 = MK DN 65
609 = MK DN 80
and extra code 768

1 = stainless steel 1.4301 2 = PEEK 3 = PVDF

6 Mounting

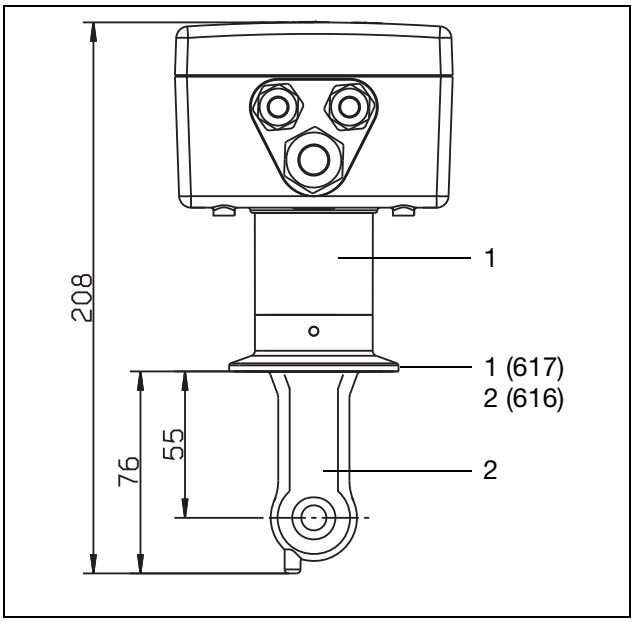

Version with process connection
616 = Clamp 2"
617 = Clamp 2 1/2"
and extra code 767 and 941
(retaining clip not included in delivery)

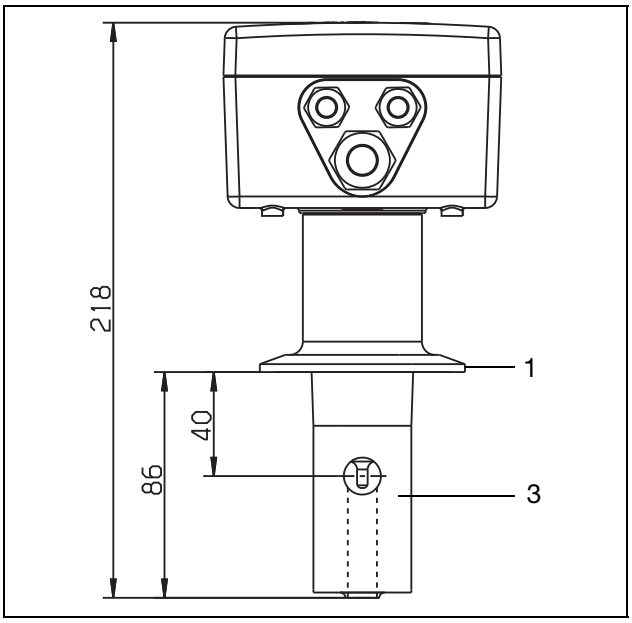

Version with process connection
617 = Clamp 2 1/2"
and extra code 768
(retaining clip not included in delivery)

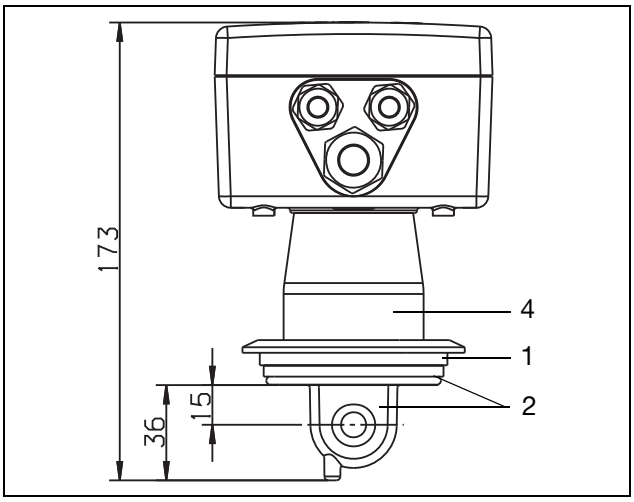

Version with process connection
686 = VARIVENT® DN 40/50
and extra code 767 and 941
(retaining clip not included in delivery)

1 = stainless steel 1.4301 2 = PEEK 3 = PVDF 4= PPS GF 40

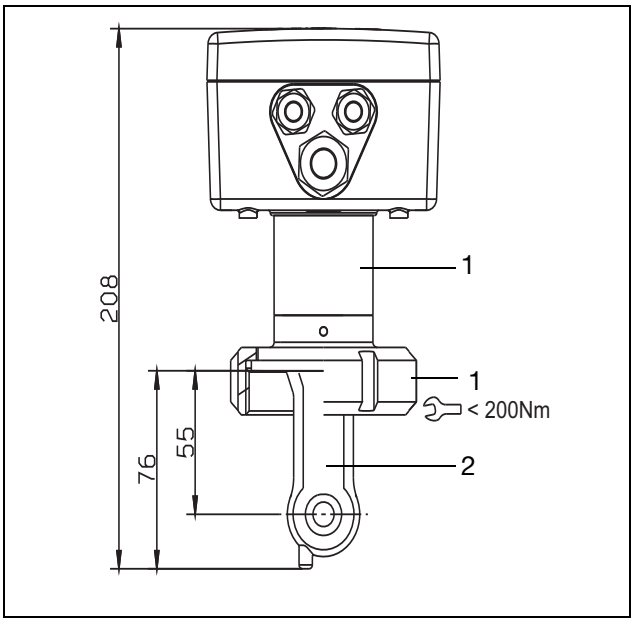

Version with process connection
690 = SMS 2" (< 200Nm)
and extra code 767 and 941

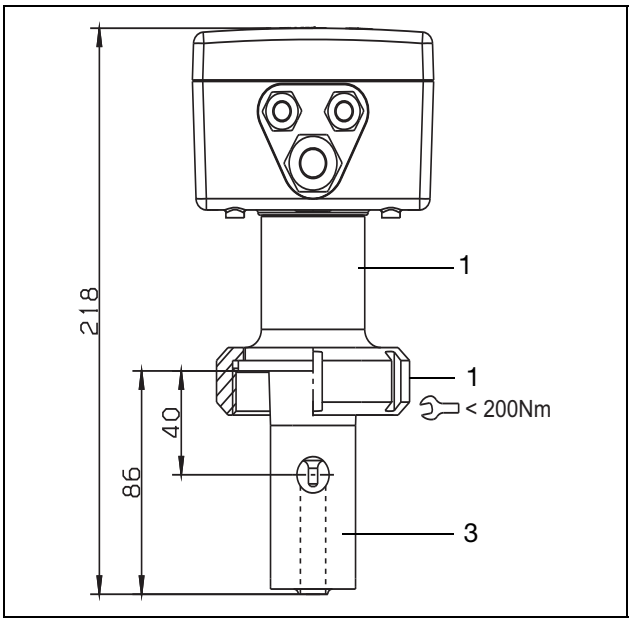

Version with process connection
690 = SMS 2" (< 200Nm)
and extra code 768

1 = stainless steel 1.4301 2 = PEEK 3 = PVDF

6 Mounting

6.3 The device with separate sensor

6.3.1 Operating unit

Transmitter with separate sensor, in plastic housing
with basic type extension 20 or 25 and electrical connection 82

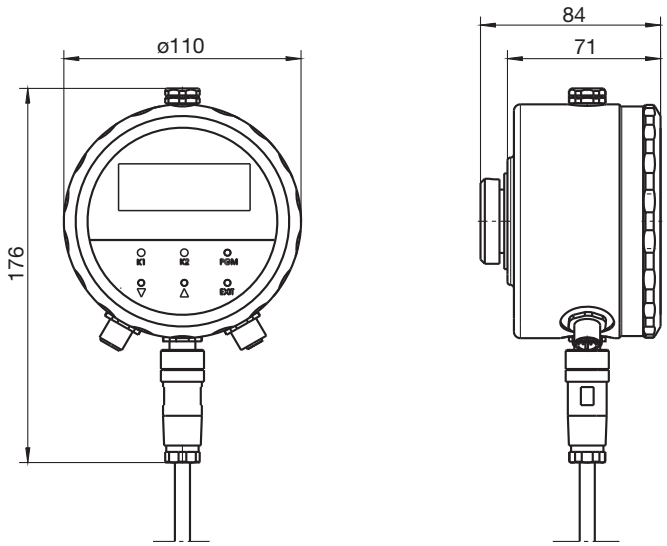

6.3.2 Wall mounting

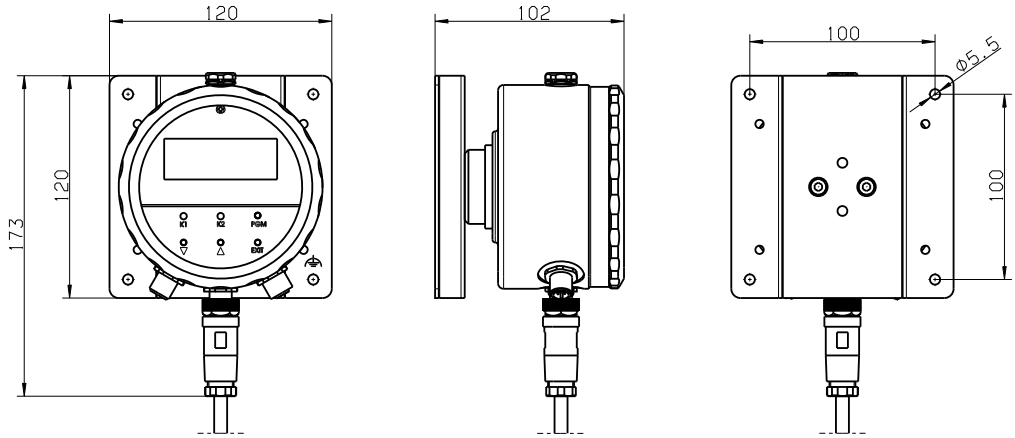

6.3.3 Process connections

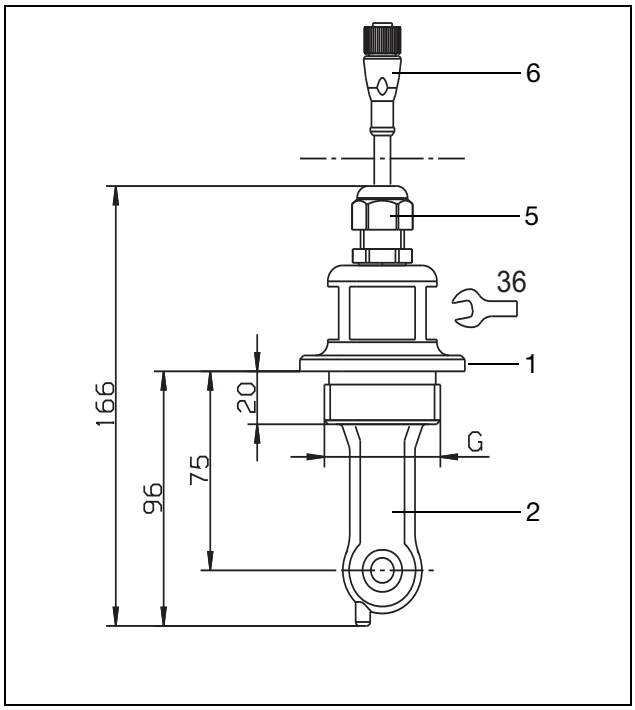

Version with process connection
108 = screw-in thread G 1 1/2 A
110 = screw-in thread G 2 A
and extra code 767

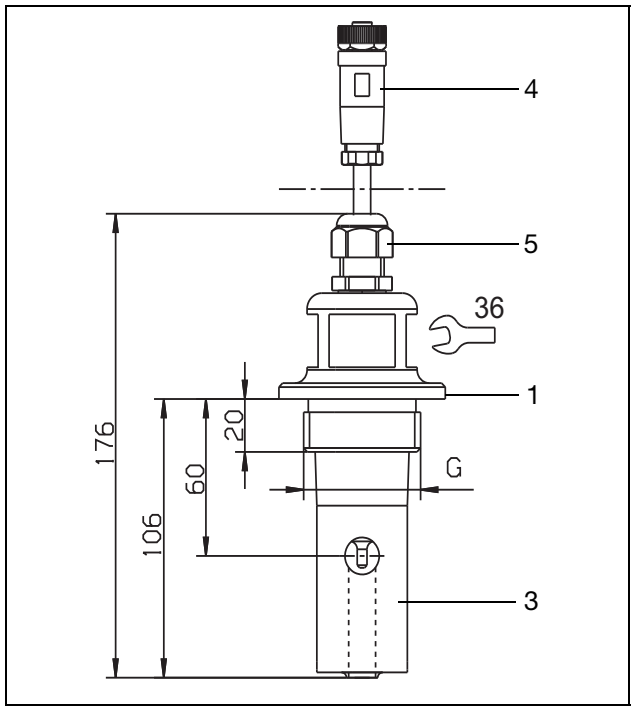

Version with process connection
107 = screw-in thread G 1 1/4 A
108 = screw-in thread G 1 1/2 A
110 = screw-in thread G 2 A
and extra code 768

1 = stainless steel 1.4301 2 = PEEK 3 = PVDF 4 = PBT 5 = PA 6 = TPU

6 Mounting

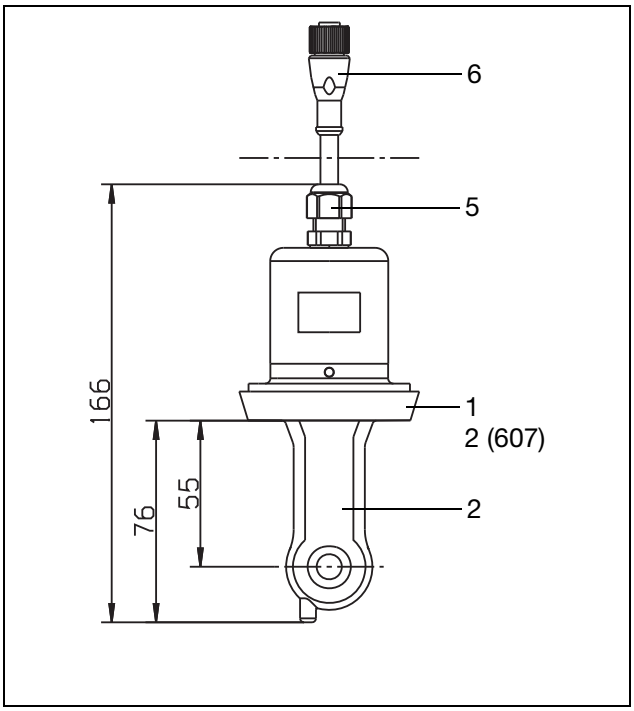

Split version with process connection
607 = MK DN 50
608 = MK DN 65
609 = MK DN 80
and extra code 767
(retaining clip not included in delivery)

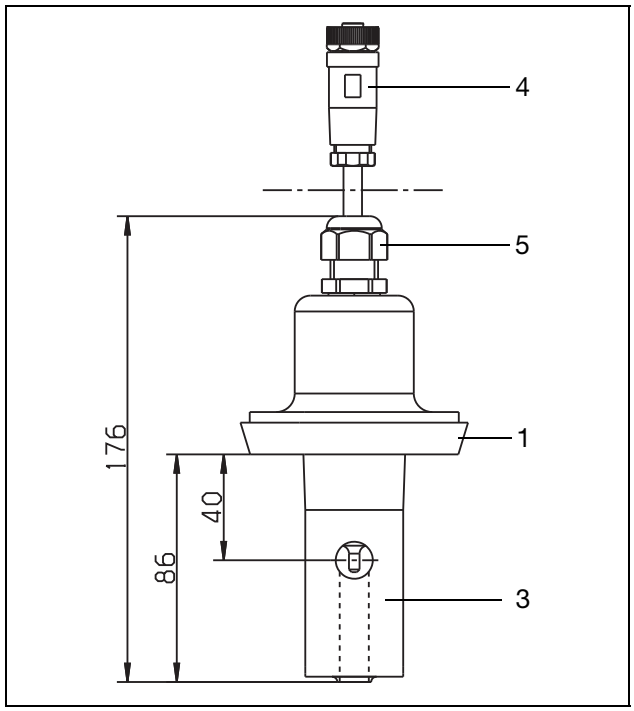

Split version with process connection
606 = MK DN40
607 = MK DN50
608 = MK DN65
609 = MK DN80
and extra code 768
(retaining clip not included in delivery)

1 = stainless steel 1.4301 2 = PEEK 3 = PVDF 4 = PBT 5 = PA 6 = TPU

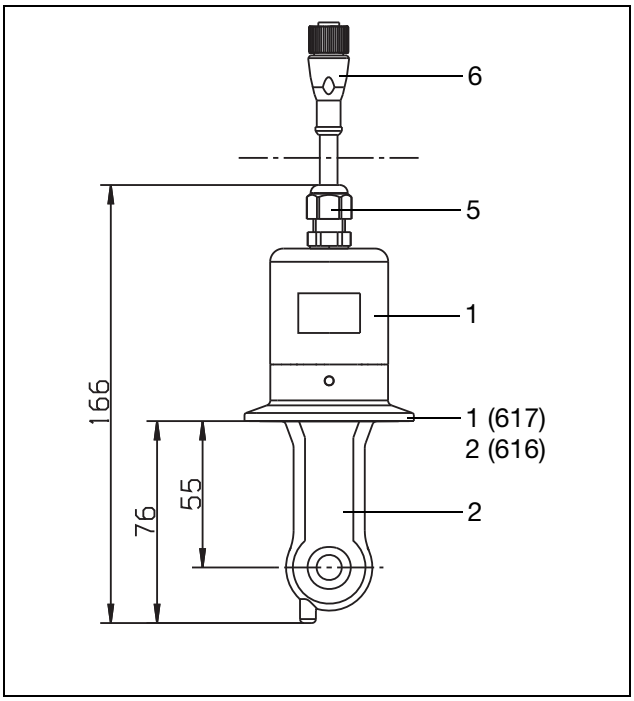

Split version with process connection
616 = Clamp 2"
617 = Clamp 2 1/2"
and extra code 767
(retaining clip not included in delivery)

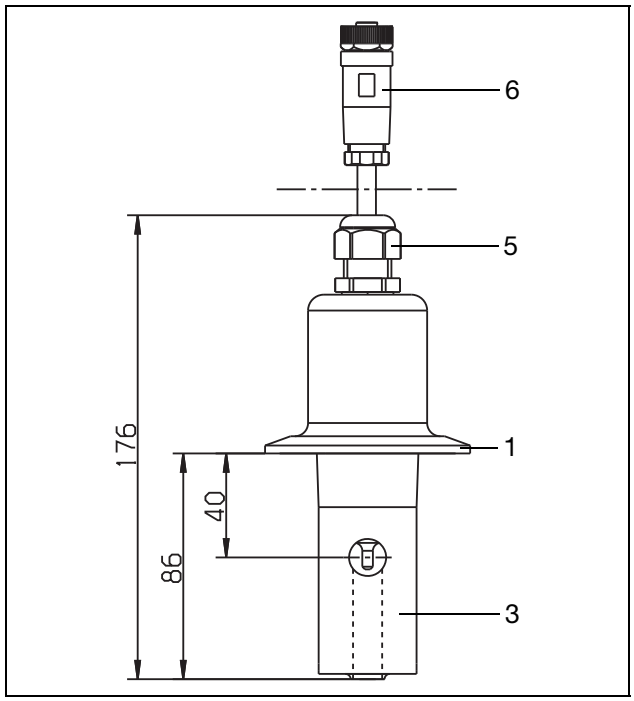

Split version with process connection
617 = Clamp 2 1/2"
and extra code 768
(retaining clip not included in delivery)

1 = stainless steel 1.4301 2 = PEEK 3 = PVDF 4 = PBT 5 = PA 6 = TPU

6 Mounting

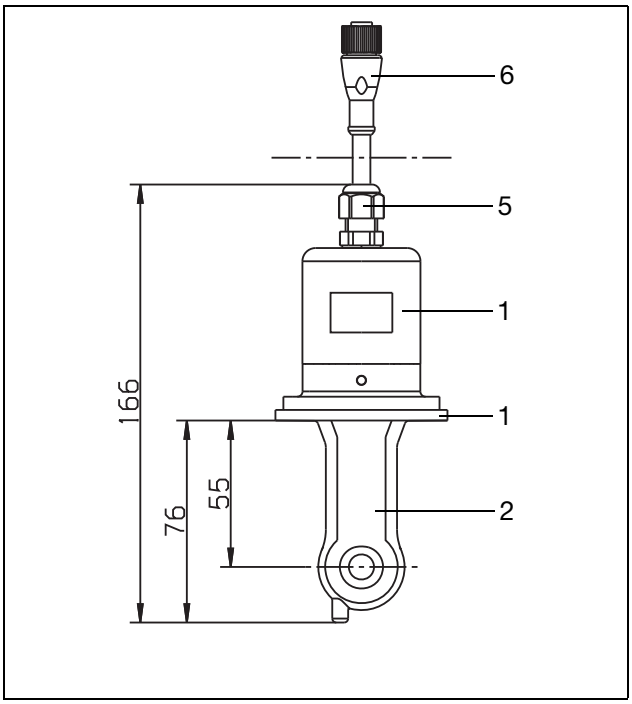

Split version with process connection
690 = SMS 2"
and extra code 767
(retaining clip (< 200Nm) not included in delivery)

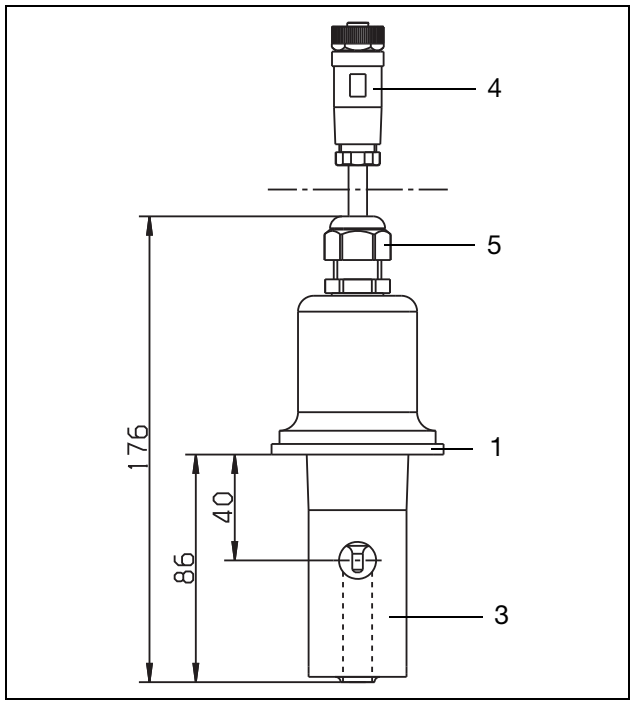

Split version with process connection
690 = SMS 2"
and extra code 768
(retaining clip (< 200Nm) not included in delivery)

Varivent®

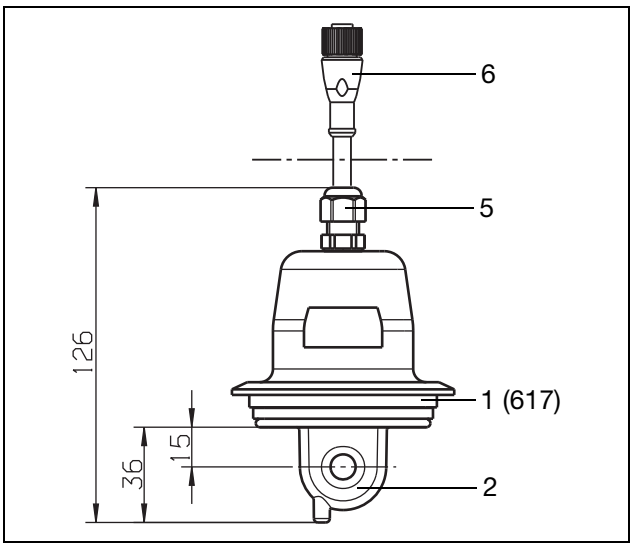

Split version with process connection
686 = VARIVENT® DN 40/50
and extra code 767 and 941
(retaining clip not included in delivery)

1 = 1.4301 2 = PEEK 3 = PVDF 4 = PBT 5 = PA 6 = TPU

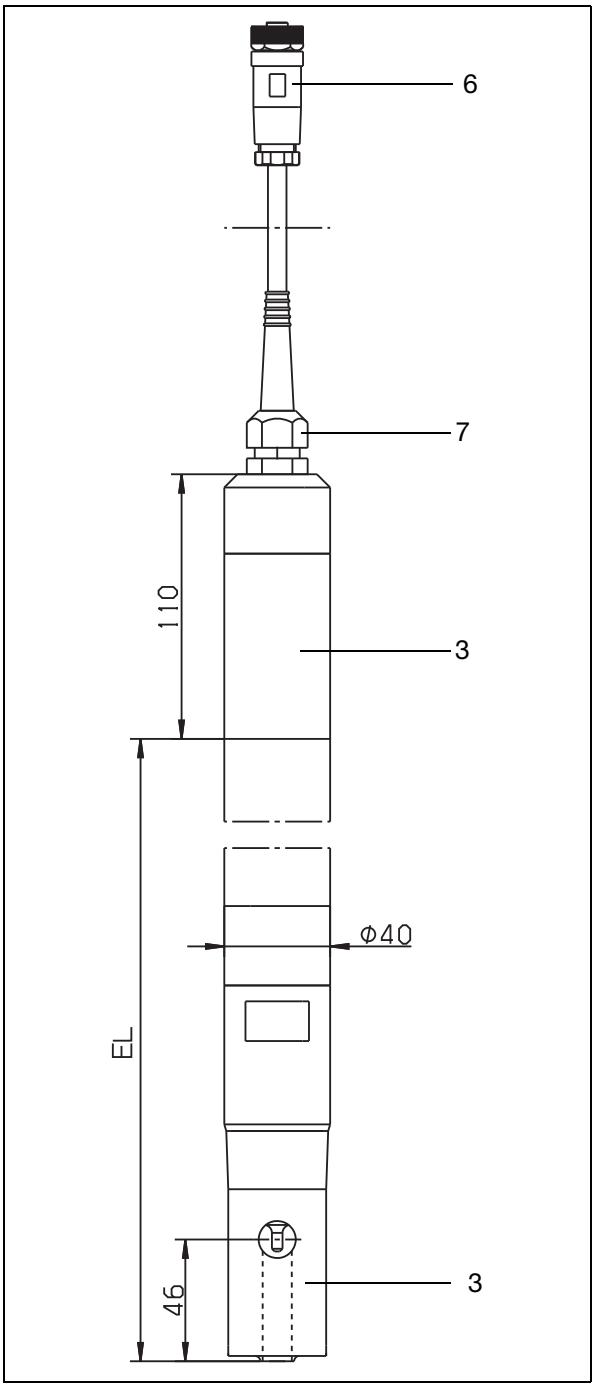

Split version with process connection 706
immersion model
(pipe clips included in delivery)

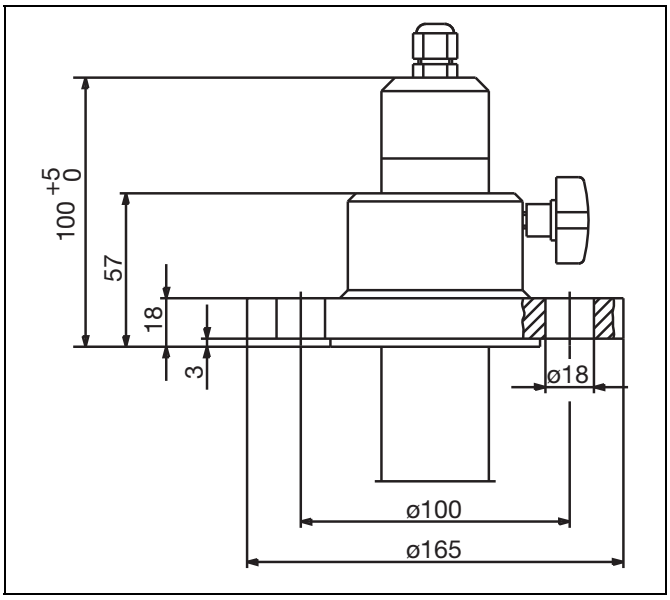

Optional accessory
DN 32 Flange
Part no. 00083375

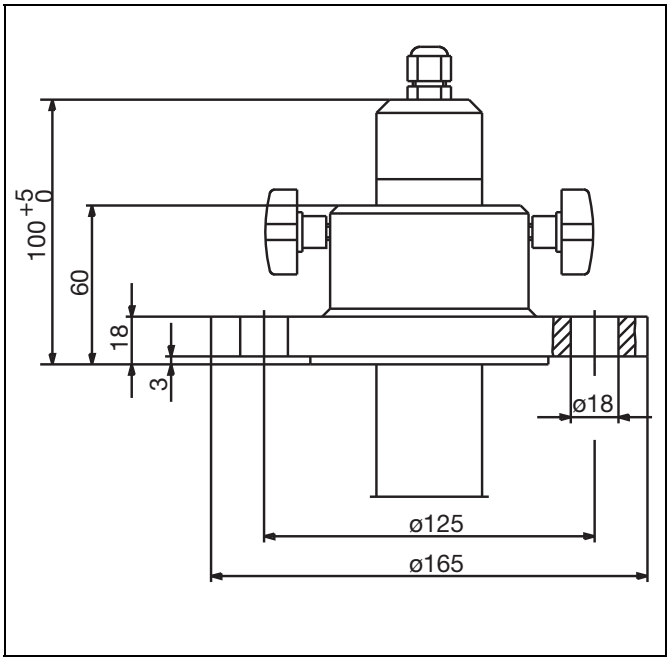

Optional accessory
DN 50 Flange
Part no. 00083376

3 = PVDF 6 = PBT 7 = brass nickel plated EPDM

6 Mounting

6.4 Mounting examples

Threaded pipe adapter

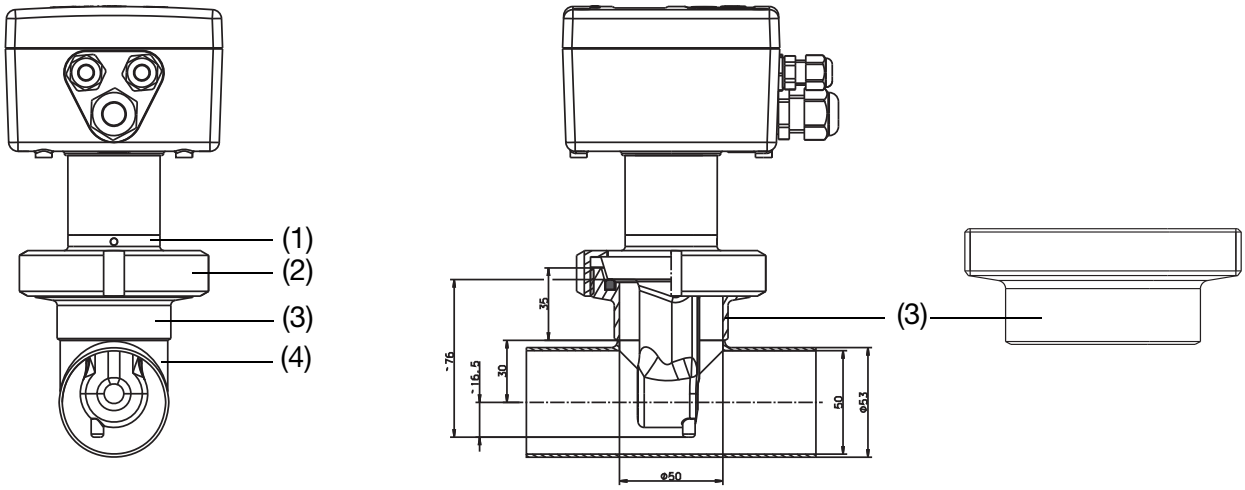

(1) Process connection 607, screwed pipe fitting DN 50, DIN 11851 (MK DN 50, milk cone), PEEK

(2) Ring nut DN 50, stainless steel 1.4301

(3) Weld-on threaded pipe adaptor DN 50, DIN 11851, stainless steel 1.4404 (matching part for process connection 607)

(4) Tee DIN 11852, short, DN 50, stainless steel 1.4301 (to be provided by the plant operator; **not** supplied by device manufacturer)

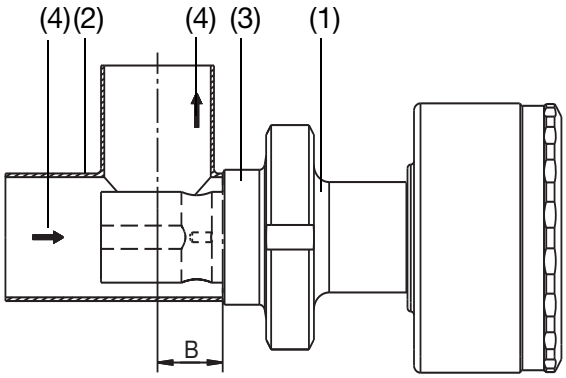

(1) Process connection 607, screwed pipe fitting DN 50, DIN 11851 (MK DN 50 milk cone), stainless steel 1.4301

(2) Tee DIN 11852, SSS DN 50, stainless steel 1.4301, Dim. B shortened to 30 mm (to be provided by the plant operator; **not** supplied by device manufacturer)

(3) Weld-on threaded pipe adaptor DN 50, DIN 11851, stainless steel 1.4301 (matching part for process connection 607)

(4) Flow direction

Clamp

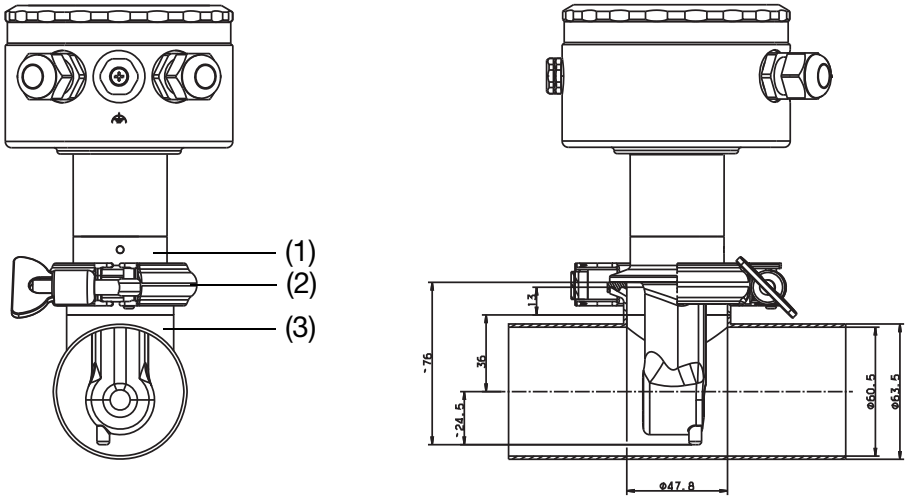

(1) Process connection 617, Clamp 2 1/2", PEEK

(2) Clamping ring , stainless steel 1.4301
(to be provided by the plant operator; **not** supplied by device manufacturer)

(3) Tee, short, 2.5" - 2" similar to DIN 11852, and 2" clamp adapter, stainless steel 1.4301
(to be provided by the plant operator; **not** supplied by device manufacturer)

Varivent®

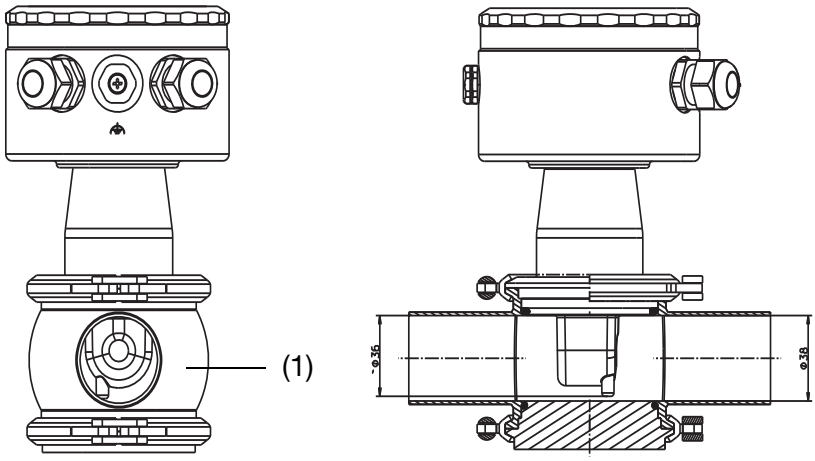

(1) Tee, VARIVENT, DN 50, stainless steel 1.4404
(to be provided by the plant operator; **not** supplied by device manufacturer)

6.4.1 Kit for pipe mounting

NOTE!

The pipe-mounting kit is also suitable for horizontal pipes.

for type 202756, part no. 00515128

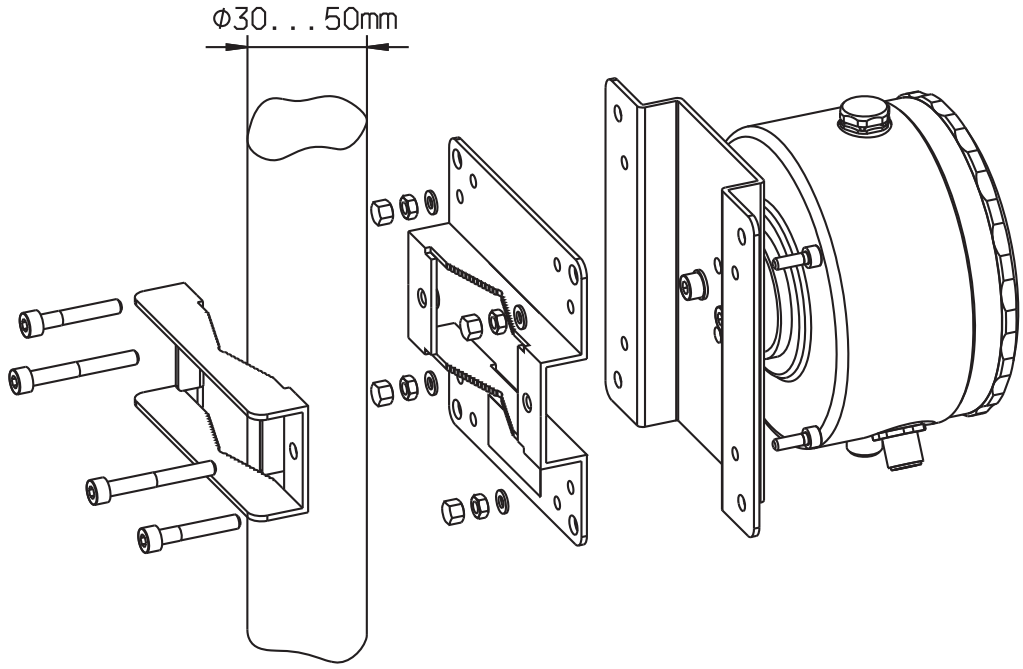

DANGER!

The electrical connections may only be set up by technically qualified personnel.

- When selecting the conductor material for the installation and for the electrical connections of the device, compliance is required with the specifications of VDE 0100 "Regulations governing the installation of heavy-current systems with rated voltages below 1000 V" or the relevant country specifications.
- The electrical connections may only be set up by technically qualified personnel.
- Completely isolate the device from the main supply, if live parts can be touched while working.
- The electromagnetic compatibility corresponds to EN 61326.
- The input, output and supply cables must be laid spatially separated from one another and not parallel to one another.
- The device is not suitable for installation in explosion-endangered areas.
- Apart from faulty installation, wrongly set values on the device can also have an adverse impact on the following process in its proper functioning, or result in damage.
- The device must be grounded with the connection for functional earth at the device or with the wall fastening (see figure).

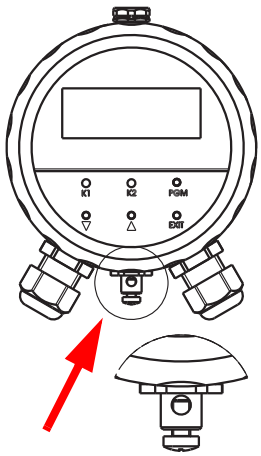

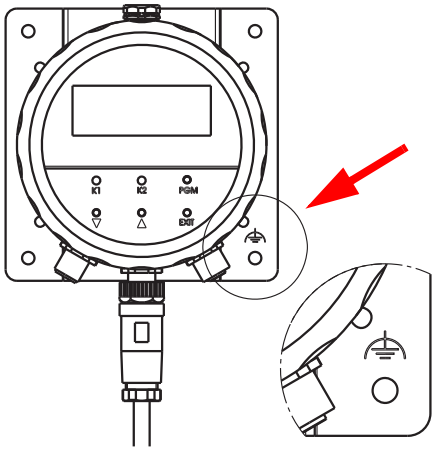

7 Installation

7.1 General

Open the operating unit

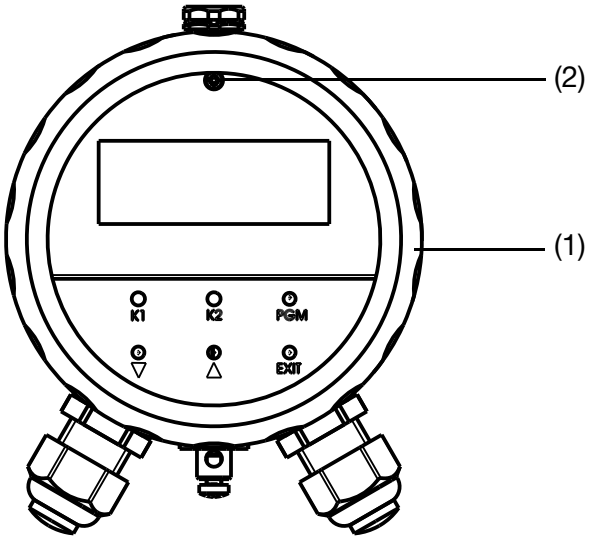

✱ Unscrew the cover (1)

✱ Remove captive fastening screw (2) and carefully take out operating unit.

Connect the cables

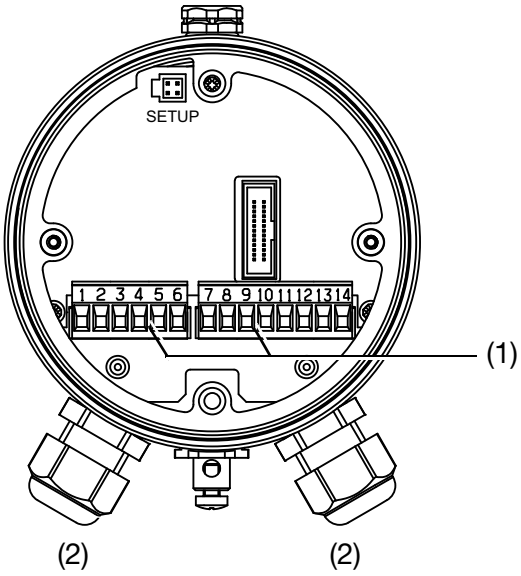

CAUTION!

For connecting the individual cores, pull out the threaded plug therminals (1) in the operating unit.

Lead the connecting cables through the cable glands (2).

Wiring



DANGER!

In the case of devices with a separate sensor, for every instrument, the transmitter and the separate sensor are matched to one another at the factory.
When connecting the components, ensure that the production number of the external sensor (on the flag tag on the connecting cable) is identical to the production number of the transmitter (on the nameplate).

7.2 Electrical connection

7.2.1 Transmitter with electrical connection 82 (cable glands)

Head transmitter

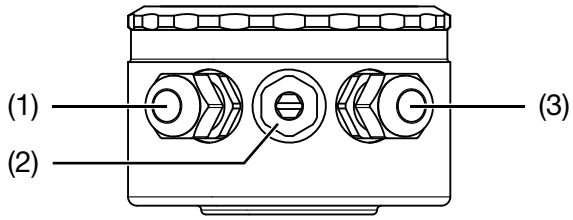

(1) Power supply and actual value output (conductivity/concentration and temperature)
M16 cable gland (PA)

(2) Switching outputs
M16 cable gland (PA)

(3) Binary input
M16 cable gland (PA)

Transmitter with separate sensor

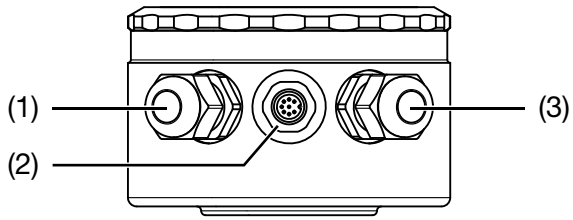

(1) Power supply and actual value output (conductivity/concentration and temperature)
M16 cable gland (PA)

(2) Separate sensor
M12 flush-type connector

(3) Binary input and switching outputs
M16 cable gland (PA)

7 Installation

ATTENTION!

In devices with a separate sensor and M12 plug / socket connectors, the screw terminals in the device are painted over.
Removing this paint voids the warranty!

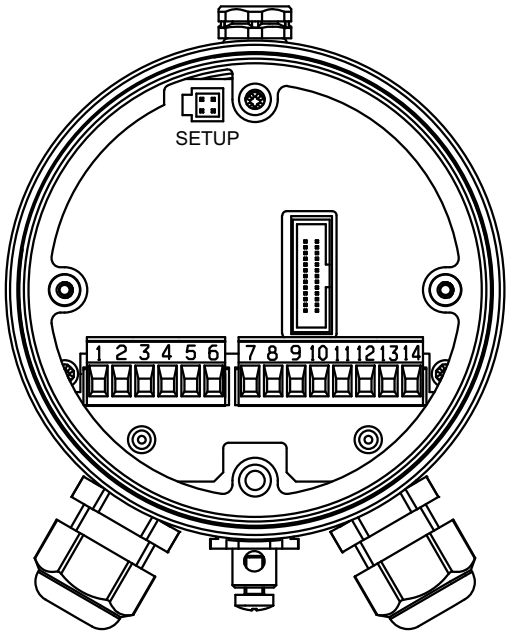

	Terminal assignment		Symbol
Supply			
Supply (with reverse-polarity protection)	1 2	L + L-	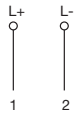

Outputs			
Analog signal output: conductivity/concentration (electrically isolated)	3 4	+ -	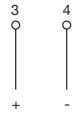
Analog signal output: temperature (electrically isolated)	5 6	+ -	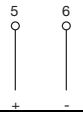
PhotoMOS® relay K1 (floating, no)	7 8		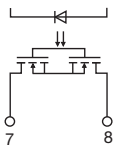
PhotoMOS® relay K2 (floating, no)	9 10		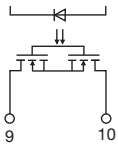

	Terminal assignment		Symbol
Binary inputs			
Binary input E1	11 12		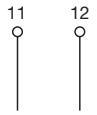
Binary input E2	13 14		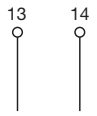

7.2.2 Transmitter with electrical connection 83 (M12 plug-and-socket connection)

Head transmitter

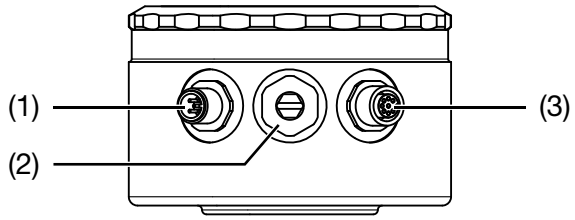

(1) **Connector I**
Power supply and actual value output for conductivity/concentration
M12 flush-type connector, 5-pin

(2) Blanking plug

(3) **Connector II**
Actual value output for temperature, and binary input and switching outputs
M12 flush-type connector, 8-pin

Transmitter with separate sensor

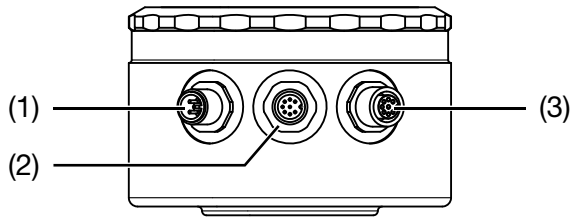

(1) **Connector I**
Power supply and actual value output for conductivity/concentration
M12 flush-type connector, 5-pin

(2) **Connector III**
Inductive conductivity sensor
M12 flush-type connector, 8-pin

(3) **Connector II**
Actual value output for temperature, and binary input and switching outputs
M12 flush-type connector, 8-pin

7 Installation

ATTENTION!

In devices with a separate sensor and M12 plug / socket connectors, the screw terminals in the device are painted over.
Removing this paint voids the warranty!

Supply	Connector	Assignment	Symbol
Supply (with reverse-polarity protection)	I	L + L-	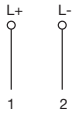

Outputs			
Analog signal output: conductivity/concentration (electrically isolated)	I		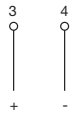
Analog signal output: temperature (electrically isolated)	II		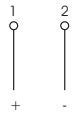
PhotoMOS® relay K1 (floating, no)	II		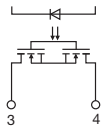
PhotoMOS® relay K2 (floating, no)	II		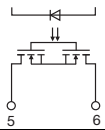

Binary inputs			
Binary input E1	I II		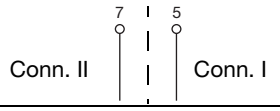
Binary input E2	I II		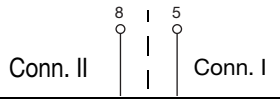

DANGER!

The ground connector at the case must be connected with the functional earth (EN 60445).

A steel piping must be connected with functional earth (EN 60445)!

8.1 Function

Configurable parameters

With the optional Setup program that is available, the transmitter can be comfortably matched to the requirements.

- Setting the measurement range and the measurement range limits.
- Setting the behavior of the outputs in case of overshooting of the measurement range.
- Setting the functions of the switching outputs K1 and K2.
- Setting the functions of the binary inputs E1 and E2.
- Setting special functions (e.g. desalination function).
- Setting a customer-specific characteristic, etc.

NOTE!

Data transmission from and to the transmitter can only take place if the voltage supply is connected to it see chapter 7 "Installation", page 33ff.

Connection

CAUTION!

The Setup interface does not have any galvanic isolation. Therefore, when connecting the PC interface cable, it is imperative to ensure that either the voltage supply of the transmitter or of the PC **are not** electrolytically coupled to the ground (e.g. notebook should be used in battery mode).

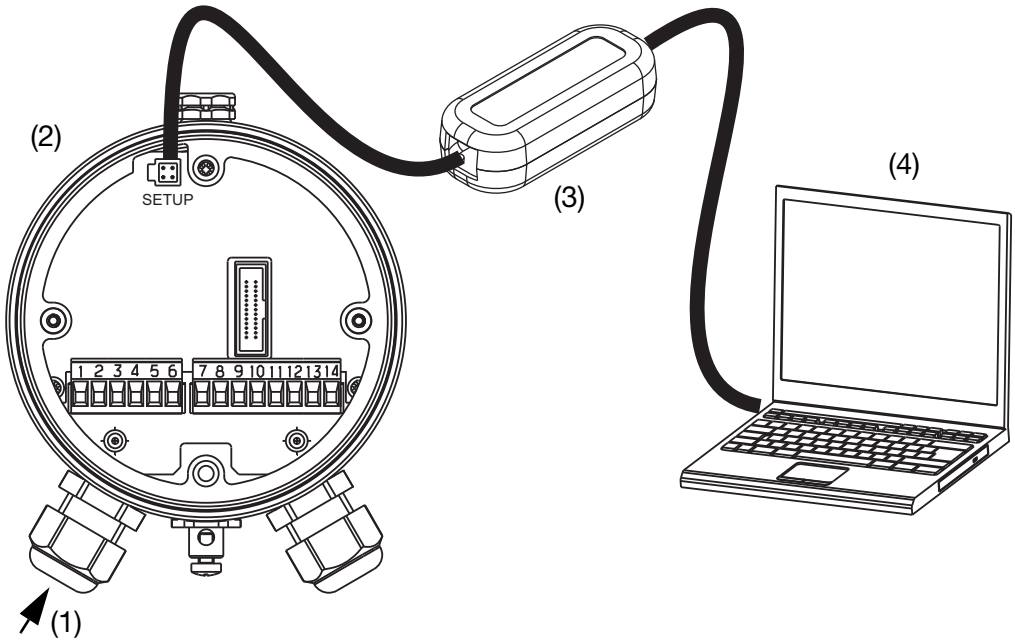

(1) Voltage supply for type 202756
(2) Type 202756
(3) PC interface cable with USB/TTL converter, part no.: 00456352
(4) PC or notebook

9 Commissioning



CAUTION!

The measuring transmitters are checked in the factory for flawless operability and shipped ready for operation.

9.1 Head transmitter or transmitter with separate sensor

✱ Install the device, see "Mounting", page 19.

✱ Connect the device, see "Installation", page 33.



DANGER!

In the case of devices with a separate sensor (base type supplementation (2) 66), for every instrument, the transmitter and the separate sensor are matched to one another at the factory.
When connecting the components, ensure that the production number of the external sensor (on the flag tag on the connecting cable) is identical to the production number of the transmitter (on the nameplate).

9.2 Replacement sensor

✱ Connect the sensor, see the operating manual of the replacement sensor.

✱ Calibrate the sensor, see the operating manual of the replacement sensor.

10.1 Operating elements

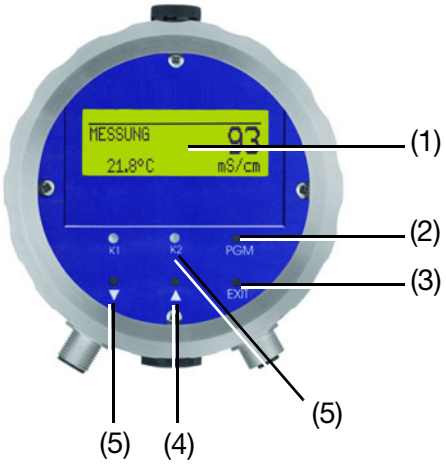

(1) Graphical LC-display, background lit up.

(2) Key (PGM), confirm inputs, select menu.

(3) Key (EXIT), interrupt inputs without saving/interrupt calibration.
One menu-level back.

(4) Key (▲), increase numerical value/forward the selection.

(5) Key (▼), decrease numerical value/forward the selection.

(6) LEDs "K1"/"K2" indicate the status of the switching outputs.
In normal operation, the LED flows when the corresponding switching output is active.
If the wiper function is activated, the LED only indicates the status.
The LED "K1" flashes during the calibration.
In case of an error, LEDs "K1" and LED "K2" flash.

10 Operation

LC-Display

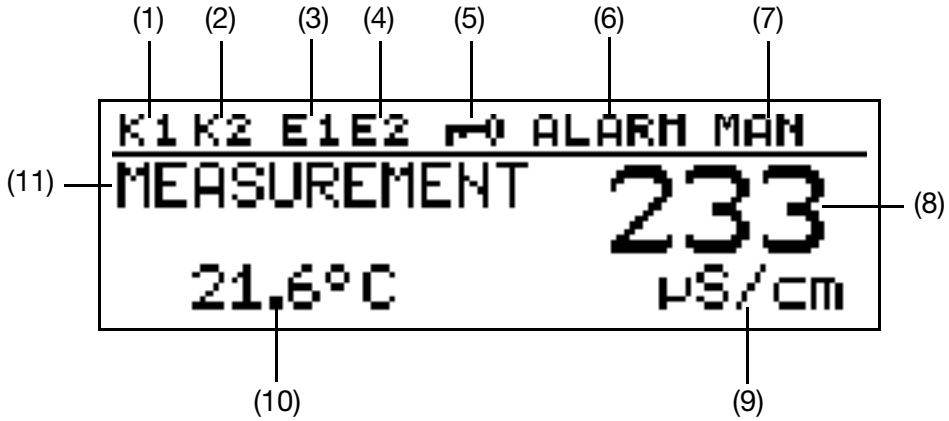

(1) Output K1 is active
(2) Output K2 is active
(3) Binary input 1 is triggered
(4) Binary input 2 is triggered
(5) Keyboard is locked
(6) Device status (hints)
- Alarm (e.g. overrange
- Calib. flashing (calibration timer
- Calib (customer calibration enabled)

(7) Output mode
- manual (manual operation)
- hold (hold operation)

(8) Conductivity/concentration-measured value
(9) Medium temperature
(10) Medium temperature
(11) Device status e.g.
- Measurement (normal)
- Desalination (desalination function)
- Dosing (desalination function)
- Locked (desalination function)
- Status of the calibration

10.2 Operation principle

10.2.1 Operating in levels

Measurement mode, see chapter 10.4 "Measurement mode", page 46

OPERATOR LEVEL, see chapter 10.5 "Operating level", page 46

INPUT CONDUCTIVITY	MEASUREMENT RANGE 1...4
	TEMP.COMPENSATION
	TEMP.COEFFICIENT 1...4
	REFERENCE TEMPERATURE
	REL.CELL CONSTANT
	MOUNTING FACTOR
	CONCENTR.MEASUREMENT
	CONCENTR.RANGE
	OFFSET
	FILTER TIME
	CALIBR.INTERVAL
OUTPUT CONDUCTIVITY	SIGNAL TYPE
	SCALING START 1...4
	SCALING END 1...4
	IN CASE OF ALARM
	IN CASE OF CALIBRATION
	SAFETY VALUE
	MANUAL OPERATION
	MANUAL VALUE
INFLOW TEMPERATURE	UNIT
	MEASURED VALUE ACQUISITION
	MANUAL SPEC.
	OFFSET
	FILTERING TIME
OUTFLOW TEMPERATURE	SIGNAL TYPE
	SCALING START
	SCALING END
	IN CASE OF ALARM
	AT TIME OF CALIBRATION
	SAFETY VALUE
	MANUAL OPERATION
	MANUAL VALUE
OUTPUT BINARY 1	FUNCTION
	LIMIT VALUE
	HYSTERESIS
	DISTANCE
	MANUAL OPERATION
	IN CASE OF HOLD
	IN CASE OF ALARM / CALIB.
	SWITCH-ON DELAY
	SWITCH-OFF DELAY
	PULSE DURATION
OUTPUT BINARY 2	FUNCTION
	LIMIT VALUE
	HYSTERESIS
	DISTANCE
	MANUAL OPERATION
	IN CASE OF HOLD
	IN CASE OF ALARM / CALIB.
	SWITCH-ON DELAY
	SWITCH-OFF DELAY
	PULSE DURATION
INPUT BINARY 1	FUNCTION
INPUT BINARY 2	FUNCTION
DESALINATION FUNCTION	REDUCTION
	DOSING TIME
	LOCKING TIME

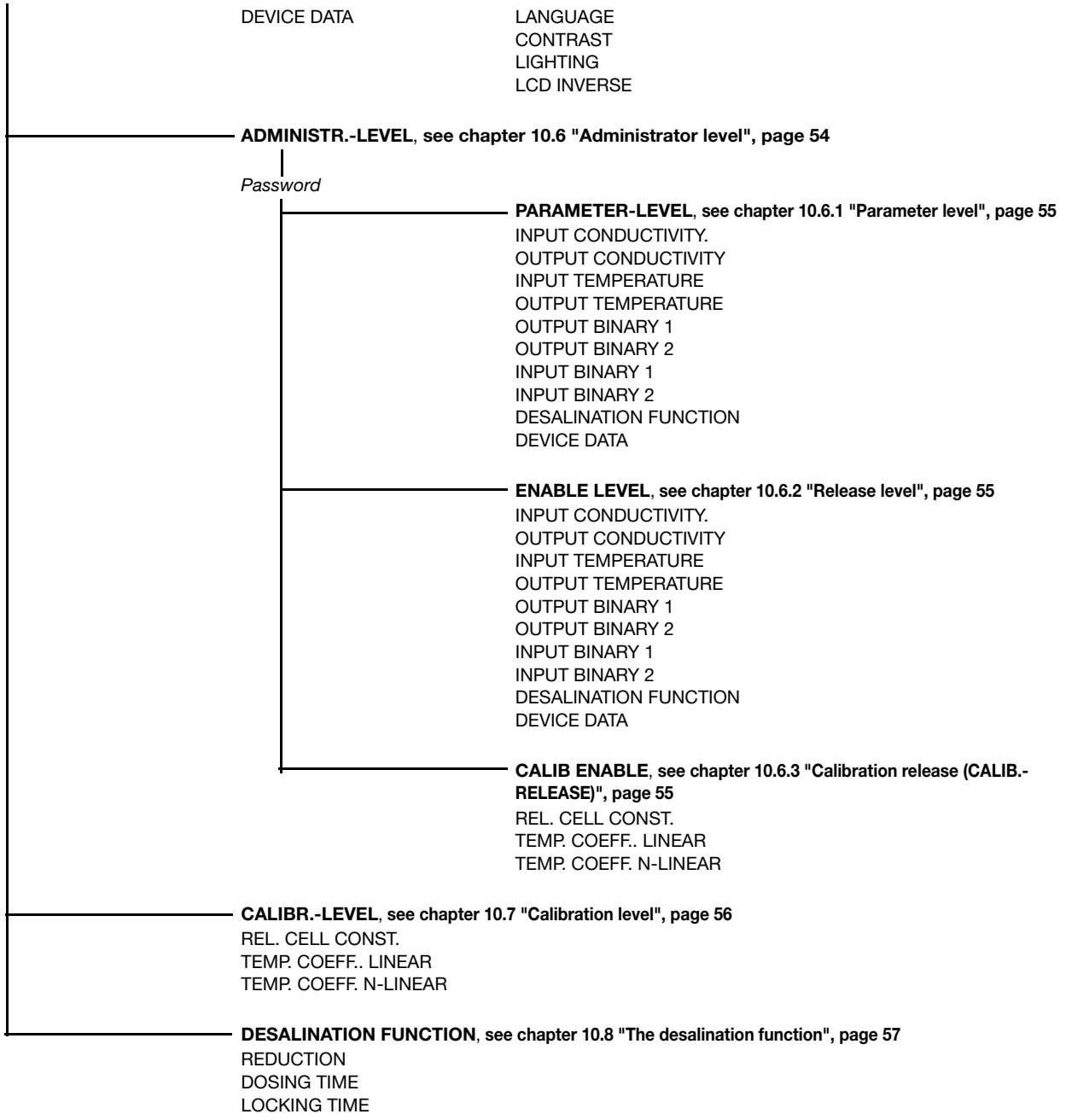
DEVICE DATA
LANGUAGE
CONTRAST
LIGHTING
LCD INVERSE
ADMINISTR.-LEVEL, see chapter 10.6 "Administrator level", page 54
Password
PARAMETER-LEVEL, see chapter 10.6.1 "Parameter level", page 55
INPUT CONDUCTIVITY.
OUTPUT CONDUCTIVITY
INPUT TEMPERATURE
OUTPUT TEMPERATURE
OUTPUT BINARY 1
OUTPUT BINARY 2
INPUT BINARY 1
INPUT BINARY 2
DESALINATION FUNCTION
DEVICE DATA
ENABLE LEVEL, see chapter 10.6.2 "Release level", page 55
INPUT CONDUCTIVITY.
OUTPUT CONDUCTIVITY
INPUT TEMPERATURE
OUTPUT TEMPERATURE
OUTPUT BINARY 1
OUTPUT BINARY 2
INPUT BINARY 1
INPUT BINARY 2
DESALINATION FUNCTION
DEVICE DATA
CALIB ENABLE, see chapter 10.6.3 "Calibration release (CALIB.-RELEASE)", page 55
REL. CELL CONST.
TEMP. COEFF.. LINEAR
TEMP. COEFF. N-LINEAR
CALIBR.-LEVEL, see chapter 10.7 "Calibration level", page 56
REL. CELL CONST.
TEMP. COEFF.. LINEAR
TEMP. COEFF. N-LINEAR
DESALINATION FUNCTION, see chapter 10.8 "The desalination function", page 57
REDUCTION
DOSING TIME
LOCKING TIME

10.3 Principle

Level

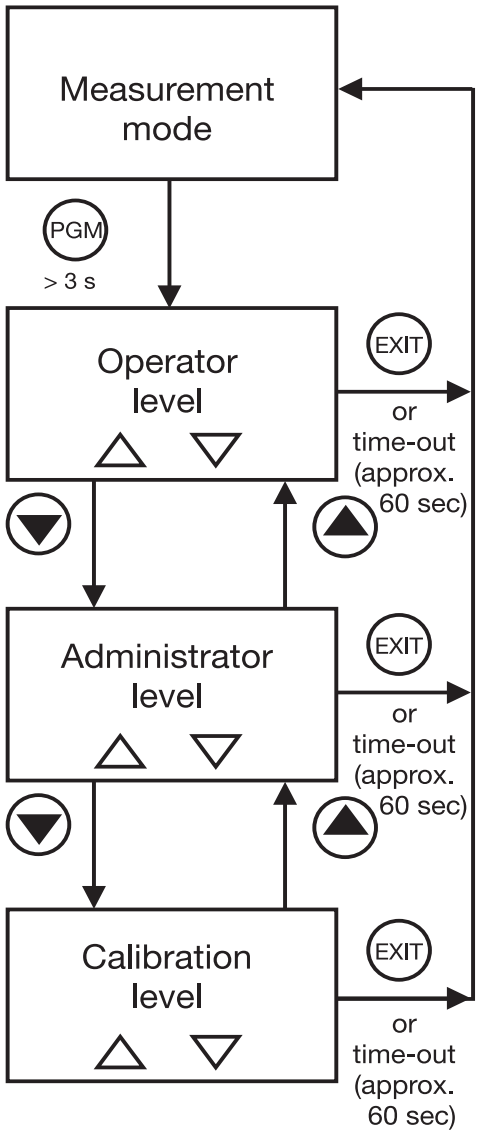

10.4 Measurement mode

Depiction

In the measurement mode, the conductivity compensated to the reference temperature, or the concentration, and the temperature of the measurement medium are displayed.

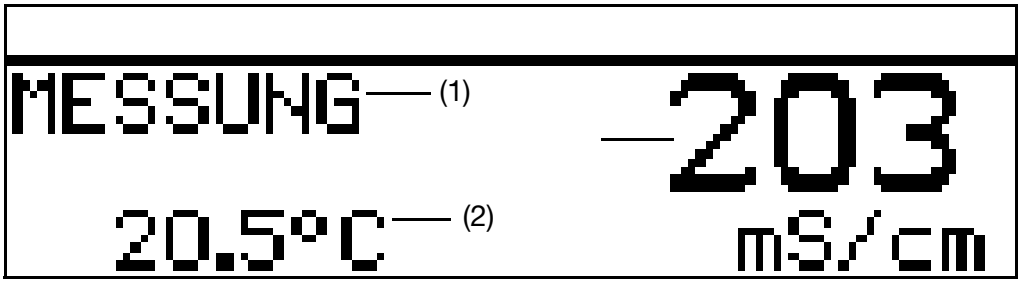

(1) MEASUREMENT -> Measurement mode

(2) 20.5 °C -> Temperature of the measurement medium

(3) 203 mS/cm -> compensated conductivity of the measurement medium (referred to the reference temperature, generally 25 °C).

10.5 Operating level

In this level, all the parameters that have been released by the Administrator (Administrator level) can be edited. All the other parameters (marked by a key) can only be read.

* Press the key PGM for longer than 3 seconds.
* Select "OPERATOR LEVEL".

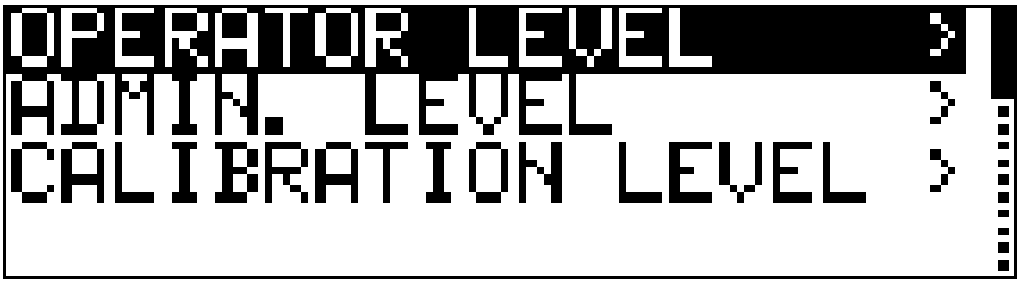

10.5.1 INPUT CONDUCTIVITY (Input conductivity)

MEASUREMENT RANGE 1 ... 4 [1]

0 to 500 µS/cm
0 to 1000 µS/cm
0 to 2000 µS/cm
0 to 5000 µS/cm
0 to 10 mS/cm
0 to 20 mS/cm
0 to 50 mS/cm
0 to 100 mS/cm
0 to 200 mS/cm
0 to 500 mS/cm
0 to 1000 mS/cm
0 to 2000 mS/cm UNK[2]

[1] The measurement ranges 2, 3 and 4 are only used if "INPUT BINARY" is configured on "MEASUREMENT RANGE./TEMP C.".
[2] This measurement range is not temperature-compensated.

TEMP. COMPENSATION

LINEAR
NON-LINEAR (see "Non-linear temperature coefficient (ALPHA)", page 66)
NAT WATERS (permissible temperature range 0 to 36 °C according to EN 27 888)

TEMP. COEFFICIENT 1 ... 4 [1]

0 to **2.20** to 5.5 %

[1] The ranges 2, 3 and 4 are only used if "INPUT BINARY" is configured on "MEASUREMENT RANGE./TEMP C.".

REFERENCE TEMPERATURE

15.0 to **25.0** to 30 °C

CELL CONSTANT

2.00 to **6.80** to 10.0 1/cm

Checking or changing is only necessary if there is a substitute sensor (base type supplementation 85) connected to the transmitter with a separate sensor. The cell constant is printed on the substitute sensor (K=x,xx).

REL. CELL CONSTANT

80.0 to **100.0** to 120 %

MOUNTING FACTOR

80.0 to **100.0** to 120 %

If the minimum distances (20 mm) of the sensor to the outer wall cannot be maintained, a limited compensation can be achieved with this parameter.

CONCENTR. MEASUREMENT

NO FUNCT.

NaOH

HNO3

CUST. SPEC. (The input of the values is only possible with the optional Setup program)

CONCENTR. RANGE

In case of HNO_3

0 to 25 % by WEIGHT
36 to 82 % by WEIGHT

In case of NaOH

0 to 15 % by WEIGHT
25 to 50 % by WEIGHT

OFFSET

-100 to **0** to +100 mS/cm (± 10 % of the measurement range)

FILTERING TIME

00:00:00 to **00:00:01** to 00:00:25 H:M:S

CALIBR.-INTERVAL

0 to 999 DAYS (0 = switched off)

10.5.2 OUTPUT CONDUCTIVITY. (Output conductivity)

SIGNAL TYPE

0 to 20 mA
4 to 20 mA
20 to 0 mA
20 to 4 mA
0 to 10 V
2 to 10 V
10 to 0 V
10 to 2 V

SCALING START 1 ... 4[1]

0 µS/cm = 4 mA

Can be set in the current measurement range, depending on the signal type

[1] The ranges 2, 3 and 4 are only used if "INPUT BINARY" is configured on "MEASUREMENT RANGE./TEMP C.".

SCALING END 1 ... 4[1]

1000 µS/cm = 20 mA

Can be set in the current measurement range, depending on the signal type

[1] The ranges 2, 3 and 4 are only used if "INPUT BINARY" is configured on "MEASUREMENT RANGE./TEMP C.".

IN CASE OF ALARM

LOW (0 mA/0 V/3,4 mA/1,4 V)
HIGH (22 mA/10.7 V)
SAFETY VALUE (depending on the signal type)

AT THE TIME OF CALIBRATION

ACCOMPANYING
FROZEN
SAFETY VALUE

SAFETY VALUE

0,0 to **4,0 to** 22,0 mA (depending on the signal type)
0 to 10,7 V

MANUAL OPERATION

off
on

MANUAL VALUE

0,0 to **4,0 to** 22,0 mA (depending on the signal type)
0 to 10.7 V

10.5.3 INFLOW TEMPERATURE

UNIT

°C
°F

MEASUREMENT VALUE ACQUISITION

Sensor
manual

MANUAL SPECIFICATION

-20.0 to **25.0 to** 150.0 °C

OFFSET

-15.0 to **0.0 to** +15.0 °C

FILTERING TIME

00:00:00 to **00:00:01** to 00:00:25 H:M:S

10.5.4 OUTFLOW TEMPERATURE

SIGNAL TYPE

0 to 20 mA
4 to 20 mA
20 to 0 mA
20 to 4 mA
0 to 10 V
2 to 10 V
10 to 0 V
10 to 2 V

SCALING START

-20 ... **0.0 °C = 4 mA** (depending on the signal type)

SCALING END

+200 ... **150.0 °C = 20 mA** (depending on the signal type)

IN CASE OF ALARM

LOW (0 mA/0 V/3.4 mA/1.4 V)
HIGH (22 mA/10.7 V)
SAFETY VALUE (depending on the signal type)

AT THE TIME OF CALIBRATION

ACCOMPANYING
FROZEN
SAFETY VALUE

SAFETY VALUE

0,0 to **4,0 to** 22,0 mA (depending on the signal type)
0 to 10,7 V

MANUAL OPERATION

off
on

MANUAL VALUE

0,0 to **4,0 to** 22,0 mA (depending on the signal type)
0 to 10.7 V

10.5.5 OUTPUT BINARY 1 and OUTPUT BINARY 2

FUNCTION

NO FUNCTION
COND. MIN.
COND. MAX.
COND. AF1
COND. AF2
TEMP. MIN.
TEMP. MAX.
TEMP. AF1
TEMP. AF2
CALIBR. TIMER
ALARM

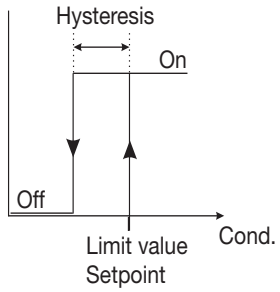

Limit function AF7

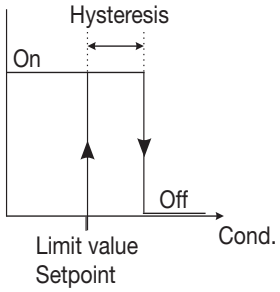

Limit function AF8

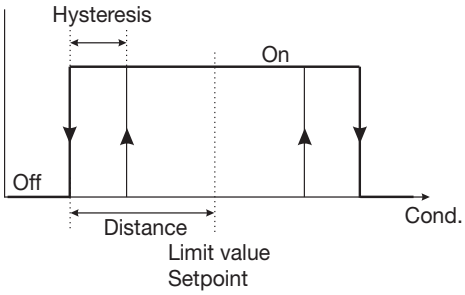

Alarm window AF1

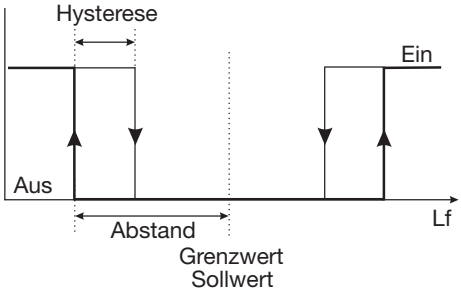

Alarm window AF2

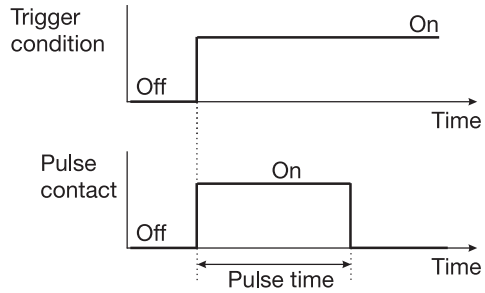

Wiper contact
Triggering condition longer than pulse duration

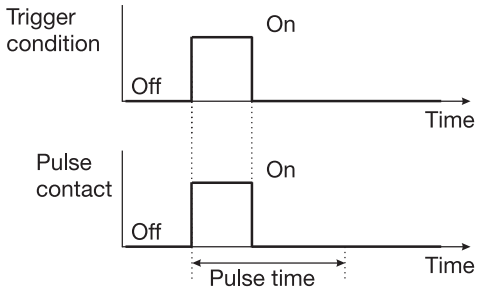

Wiper contact
Triggering condition shorter than pulse duration

LIMIT VALUE

-20.0 to 999.0 (depending on the function, see above)

HYSTERESIS

0.0 to **1.0** to 999.0 (depending on the function, see above)

DISTANCE

0.0 to 999.0 (depending on the function, see above)

MANUAL OPERATION

OFF
ON

IN CASE OF HOLD

INACTIVE
ACTIVE
FROZEN

IN CASE OF ALARM / CALIB.

INACTIVE
ACTIVE
FROZEN

SWITCH-ON DELAY

00:00:00 to 01:00:00 H:M:S

SWITCH-OFF DELAY

00:00:00 to 01:00:00 H:M:S

PULSE DURATION

00:00:00 to 01:00:00 H:M:S (see above: "Function, wiping contact)

10.5.6 INPUT BINARY 1 and INPUT BINARY 2

FUNCTION

NO FUNCTION
KEYBOARD LOCK/HOLD
MEASUREMENT RANGE./TEMP C.
DESALINATION FUNCTION.

Setting parameters		**binary input 1**	**binary input 2**
Measurement range- / Temperature-coefficient switching	MB1/Tk1	open	open
	MB2/Tk2	closed	open
	MB3/Tk3	open	closed
	MB4/Tk4	closed	closed
Keyboard lock		closed	X
Hold-function		X	closed
Desalination function: Start		close (flank 0 - 1)	open
Desalination function Stop		open	close (flank 0 - 1)

10.5.7 DESALINATION FUNCTION

(Description see "The desalination function", page 57)

REDUCTION

0 to **10** to 50 %

DOSING TIME

0:00:00 to **00:01:00** to 18:00:00 H:M:S

LOCKING TIME

0:00:00 to **00:01:00** to 18:00:00 H:M:S

10.5.8 DEVICE DATA

LANGUAGE

GERMAN
ENGLISH
FRENCH
SPANISH
POLISH
SWEDISH
ITALIAN
PORTUGUESE
DUTCH
RUSSIAN



NOTE!

By inputting the password 7485 in the Administrator level, the operating language is reset to English.

CONTRAST

0 to **6** to 11

LIGHTING

OFF
ON
FOR OPERATION (about 50 s after the last keystroke, the lighting gets switched off)

INVERSE LCD

OFF
ON

10.6 Administrator level

- All the parameters can be edited in this level.
- In this level, it is also possible to determine which parameters a "normal" user may edit or which calibrations may be carried out.
  Editable parameters can be edited in the operator level.
  Non-editable parameters are marked in the operator level with a key symbol .

You can get to the Administrator level as follows:

✱ Press the key PGM for longer than 3 seconds.

✱ With the keys ▼ or ▲, select "ADMINISTRATOR-LEVEL".

✱ Keys ▼ or ▲ input the password 300.

✱ Press the key PGM.

Levels of the Administrator level

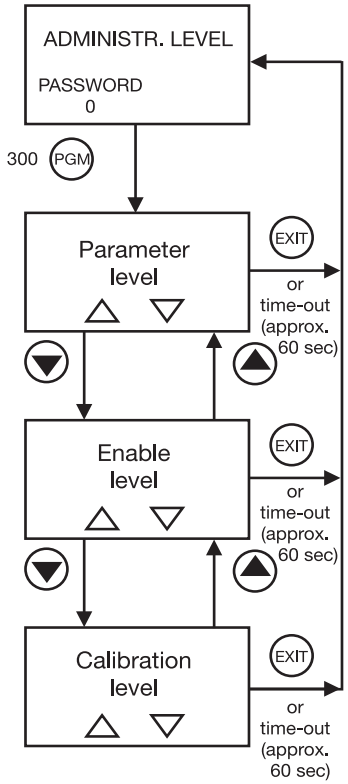

10.6.1 Parameter level

In this level, the Administrator can edit any parameter of the operator level. The structure of the parameter level in the Administrator level is identical to the operator level, see "Operating level", page 46 and onwards.

10.6.2 Release level

In this level, the Administrator can determine which parameters the operator is permitted to modify in the operator level.
The options "READ ONLY" and "EDIT" are available for the purpose.
The structure of the parameter level in the Administrator level is identical to the operator level, see "Operating level", page 46 and onwards.

10.6.3 Calibration release (CALIB.-RELEASE)

In this level, the Administrator can specify whether the operator may calibrate

- the relative cell constant
- the linear temperature coefficient
- the non-linear temperature coefficient

i.e. change them.

10.7 Calibration level

In this level, the calibrations released by the Administrator (Administrator level) can be carried out.

* Press the key (PGM) for longer than 3 seconds.
* With the keys (▼) or (▲), select "CALIBRATION-LEVEL".

10.7.1 REL. CELL CONSTANT. (relative cell constant)

If this function has been released by the Administrator, the operator can calibrate the relative cell constant of the device here;
see "Calibration of the relative cell constant", page 61.

10.7.2 TEMP. COEF. LINEAR (Temperature coefficient linear)

If this function has been released by the Administrator, the operator can calibrate the device on fluids with linear temperature coefficients;
see "Linear temperature coefficient (ALPHA)", page 63.

10.7.3 TEMP. CO. N-LINEAR (Temperature coefficient, non-linear)

If this function has been released by the Administrator, the operator can calibrate the device on fluids with non-linear temperature coefficients;
see "Non-linear temperature coefficient (ALPHA)", page 66.

10.8 The desalination function

Brief description

In the case of cooling water, using the conductivity, the total salt content is assessed. Upon reaching a limiting conductivity (at maximum permissible salt concentration/densification), dilution of the cooling water is necessary. For this purpose, a desalination valve is opened, densified water flows out and is supplemented with fresh water. After the conductivity of the cooling water has dropped below the limit value, the desalination valve is closed again.

Addition of biocide

In order to prevent biological growth in cooling systems, biocides are added to the cooling water. There is no ideal control variable for the added quantity and time of a biocide dosing. In most cases, the dosing time is used as the control variable. Here, the dosing quantity is obtained from the pump capacity and pump operating time (plant-specific). The success of the biocide treatment must be checked at regular intervals.

Desalination before the addition of biocide

If a conductivity-enhancing biocide is added to the cooling water, the conductivity can cross the limit value as a result. Thereupon, the desalination valve would open and a part of the added biocide would be discharged into the effluent canal (note and comply with the legal conditions!).

To prevent this, before adding the biocide, the conductivity in the cooling system is reduced by desalination by about 10 % below the limit value. Thereafter, the desalination valve is temporarily blocked.

Desalination locking

After the addition of the biocide, the desalination should be blocked till the biocide that has been added has mostly decomposed in the cooling system (not and comply with the legal requirements.).

Realization in the case of the type 202756

- The desalination function is only possible in the mode "Conductivity measurement". Not in the case of concentration measurement.
- If the desalination function is activated, all the parameters that are not relevant for this function are turned off.
- The desalination function can be started via the binary input 1 and stopped using the binary input 2, see "INPUT BINARY 1 and INPUT BINARY 2", page 53. The desalination function can also be stopped with the EXIT key.
- The current status of the desalination function is shown in the display.
- The desalination valve is controlled through output K1.
- The addition of biocide is controlled via output K2.
- After the desalination, K1 goes into the configured Hold state (desalination locking).
- The desalination reduction can be set in the range from 1 to 50 % below the actual limit value of binary input 1. The default setting is 10 % below the limit value.

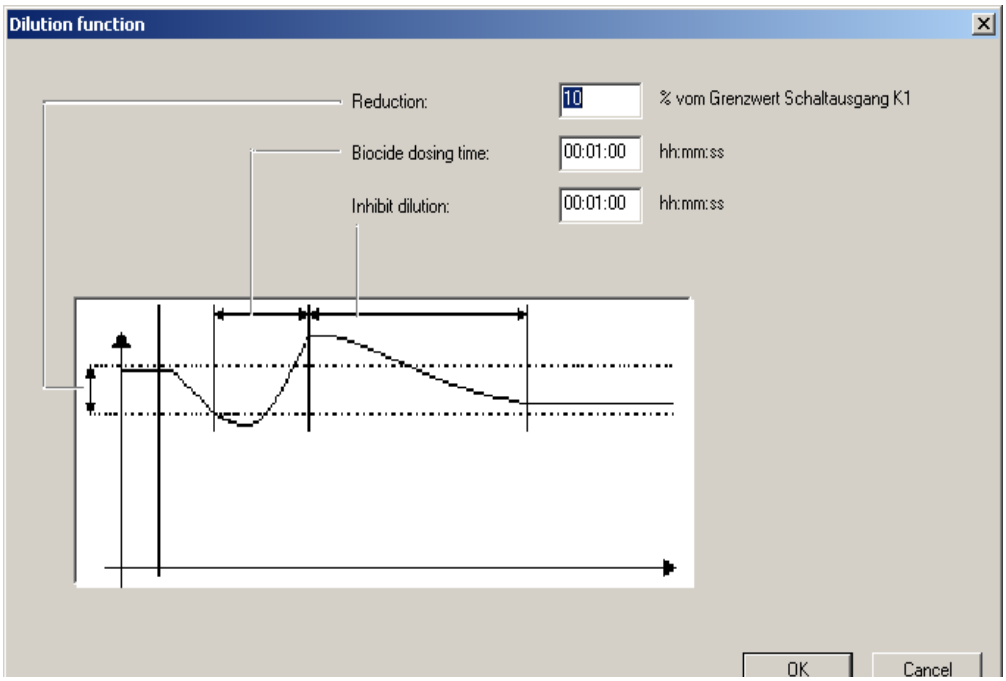

10.8.1 Setting the desalination function

All the parameters are plant-dependent and must be matched to the prevalent conditions.

* Press the key PGM for longer than 3 seconds.
* With the keys ▼ or ▲, select the "OPERATOR LEVEL"; with key PGM, confirm the selection.



* With the keys ▼ or ▲, select "INPUT BINARY"; with key PGM, confirm the selection.

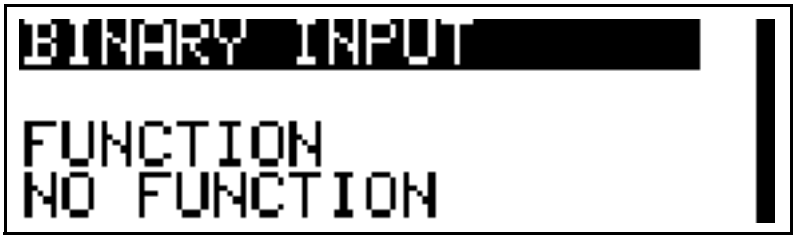

* With the keys ▼ or ▲, select "DESALINATION FUNCT.". with key PGM, confirm the selection.



* Use the key (EXIT) to switch to the operator level.
* With the key (▼) select "DESALINATION FUNCTION".



* With key (PGM), confirm the selection.



* Set the desalination reduction with the keys (▼) or (▲) in the range from 1 to **10** to 50% below the actual limit value.
* with key (PGM), confirm the setting.
* With the keys (▼) or (▲), select "DOSING TIME"; with key (PGM), confirm the selection.

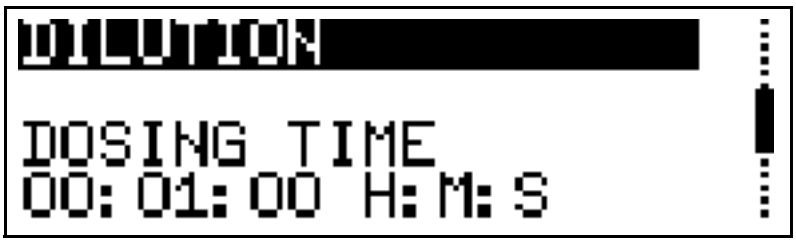

* Set the dosing time with the keys (▼) or (▲) in the range from 0:00:00 to **00:01:00** to 18:00:00 H:M:S.
* with key (PGM), confirm the setting.
* With the keys (▼) or (▲), select "LOCKING TIME"; with key (PGM), confirm the selection.



* Set the locking time with the keys ▼ or ▲ in the range from 0:00:00 to **00:01:00** to 18:00:00 H:M:S.
* with key PGM, confirm the setting.

NOTE!

If there is a failure of the supply voltage during the running of the desalination function, the function is canceled.

In order that the desalination function can run again, it must be started again.

11.1 General

For increasing the accuracy, the device has various calibration options.

NOTE!

At regular intervals (depending on the measurement medium), the conductivity sensor must be cleaned and calibrated.

The LED "K1" flashes during the calibration.

11.2 Calibration of the relative cell constant

In case of increased demands on the accuracy, the cell constant must first be calibrated.

Precondition

- the device must be supplied with power,
  see chapter 7 "Installation", page 33ff.
- The sensor must be connected to the transmitter (in case of "shouldered" construction).
- The transmitter is in "Measurement mode".

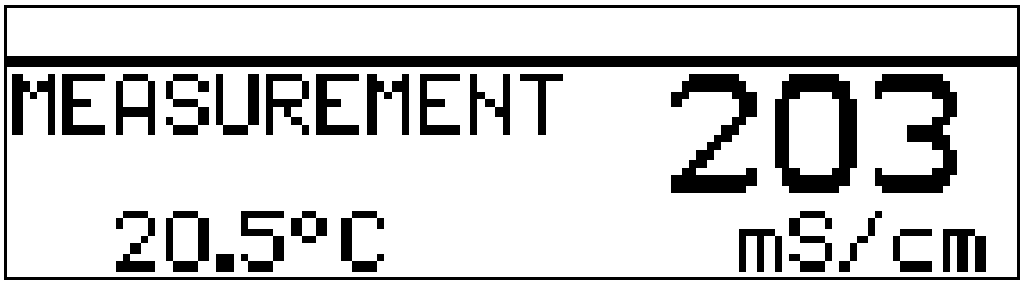

✱ Submerge the conductivity sensor in a reference solution of known conductivity.

CAUTION!

During the calibration, the temperature of the measurement solution must remain constant.

✱ Press the key PGM for longer than 3 seconds.

✱ With the keys ▼ or ▲, select "CALIBRATION-LEVEL". With key PGM, confirm the selection.

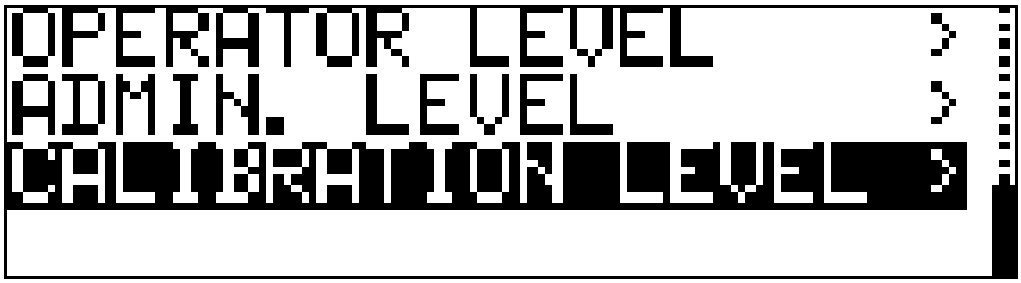

* With the keys ▼ or ▲, select "REL. CELL CONSTANT.". with key PGM, confirm the selection.

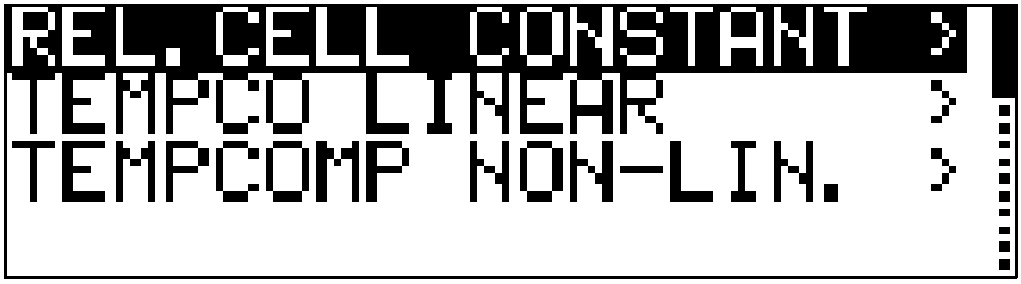

* When the measured value is stable, press the PGM key.
* With the keys ▼ or ▲, correct the displayed uncompensated conductivity value to the conductivity value of the reference solution.
* Press the PGM key.
  The relative cell constant calculated by the device is displayed.

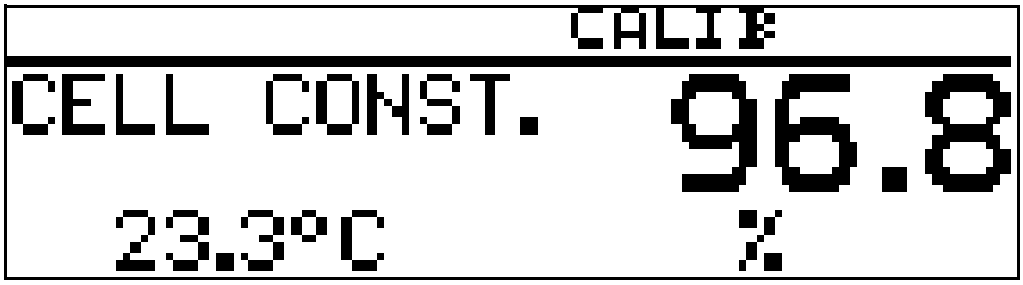

* Accept the relative cell constant determined -> press the key PGM for longer than 3 seconds, or
  discard the value -> press the key EXIT .

The transmitter is in the "Calibration menu".

* Press key EXIT;
  The transmitter is in "Measurement mode" and displays the compensated conductivity of the reference solution.

11.3 Calibration of the temperature coefficient of the measurement solution

11.3.1 Linear temperature coefficient (ALPHA)

The conductivity of any measurement solution changes according it its specific temperature coefficient.
We therefore recommend carrying out the calibration of the temperature coefficient

Precondition

- the device must be supplied with power.
see chapter 7 "Installation", page 33ff.
- The sensor must be connected to the transmitter (in case of "shouldered" construction).
- The transmitter is in "Measurement mode".

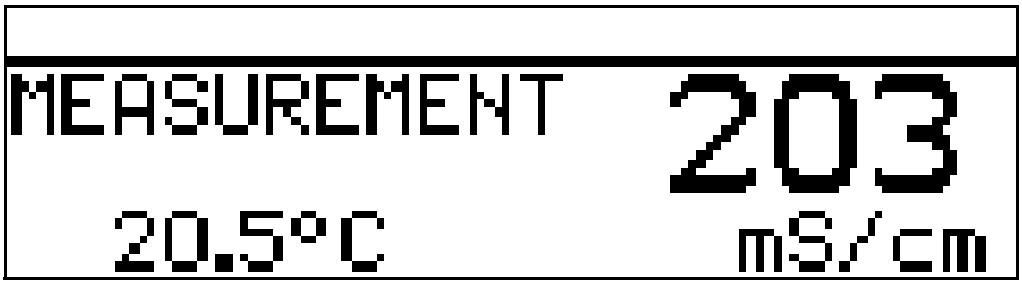

✱ Submerge the conductivity sensor in a sample of the measurement solution.

✱ Press the key (PGM) for longer than 3 seconds.

✱ With the keys (▼) or (▲), select "CALIBRATION-LEVEL". with key (PGM), confirm the selection.

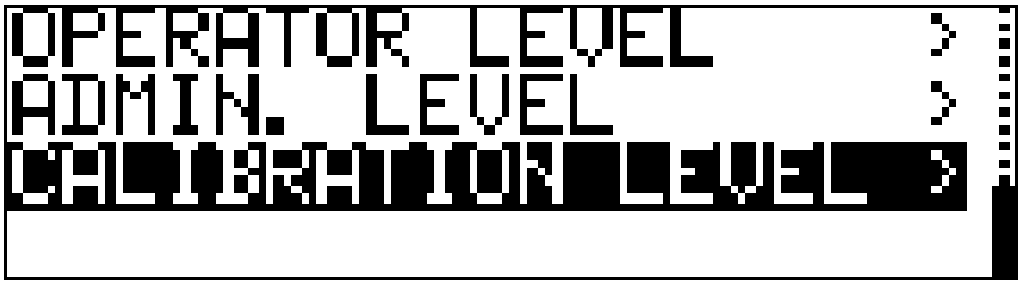

✱ With the keys (▼) or (▲), select "TEMP. COEFF LINEAR". with key (PGM), confirm the selection.

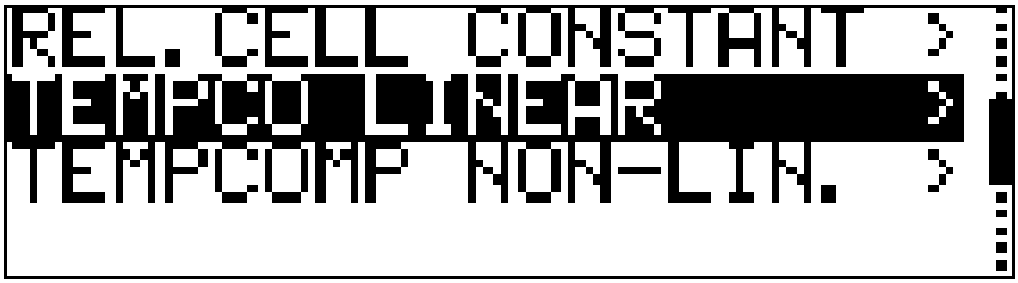

✱ With the keys ▼ or ▲, input the operating temperature and confirm with the PGM key .

NOTE!

The operating temperature must be at least 5 °C above or below the reference temperature (25.0 °C).

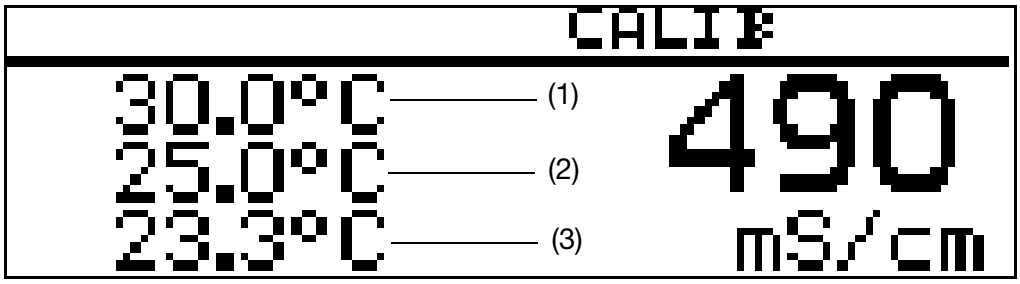

The LC-Display now shows

(1) the selected operating temperature (flashing)
(2) the reference temperature (flashing)
(3) the current sensor temperature (static)

✱ Heat the measurement medium till both the reference temperature as well as the operating temperature are reached (the corresponding value does not flash any more).

CAUTION!

During the calibration, the temperature changing speed of the measurement solution of
10 K/min in the case of the device with a free-standing temperature sensor or
1 K/min in the case of the device with an integrated temperature sensor must not be exceeded.

As soon as one of the target temperatures is reached, its display becomes static (not flashing).

NOTE!

Calibration is also possible in the cooling process (under dropping temperature). The start is made above the operating temperature, the end below the reference temperature.

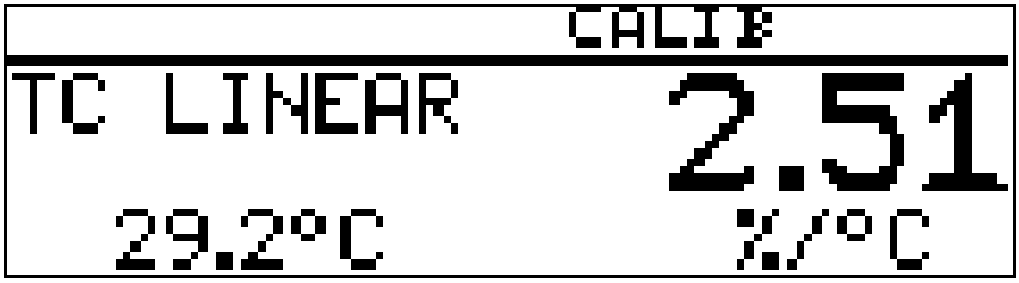

The LC-display now shows the determined temperature coefficient in %/K.

Accept the temperature coefficient determined -> press the key (PGM) for longer than 3 seconds, or discard the value -> press the key (EXIT) .

The transmitter is in the "Calibration menu".

✱ Press key (EXIT);
The transmitter is in "Measurement mode" and displays the compensated conductivity of the reference solution.

11.3.2 Non-linear temperature coefficient (ALPHA)

General

Since the temperature coefficient of some media is not constant over a larger temperature range, the device has the facility to divide a temperature range (T_{start} to T_{end}) into 5 sub-ranges. In each of these ranges, compensation can be carried out with different TC values. This so-called TC curve can

- be edited with the Setup program and transmitted to the device
- or calibrated automatically at the device.

Determining the TC-curve

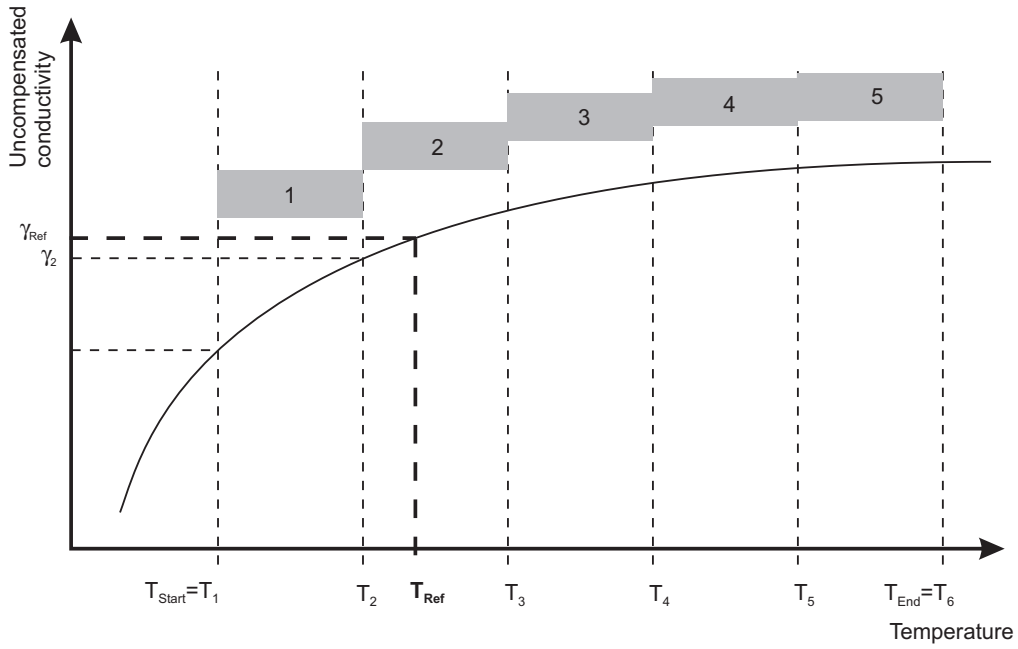

Calculation of a temperature coefficient

$$\alpha_1 = \frac{\left(\frac{\gamma_1}{\gamma_{Ref}} - 1\right) \times 100}{T_1 - T_{Ref}}$$

α Temperature coefficient (TC)

γ uncompensated conductivity

TC-curve

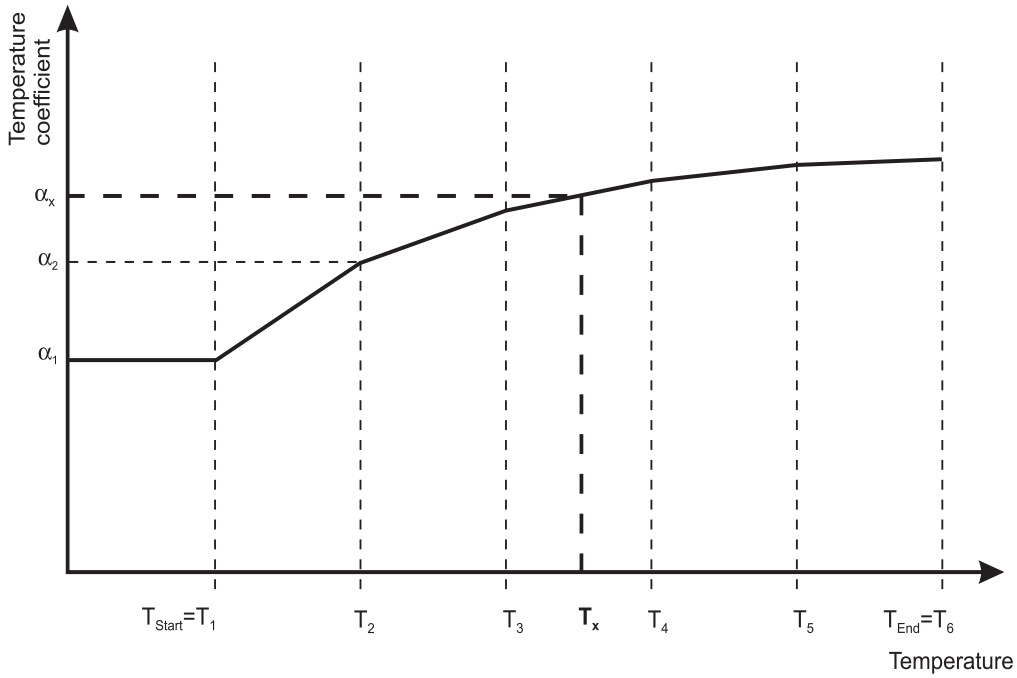

Temperature compensation with the TC-curve

With the help of the current medium temperature, the corresponding temperature coefficient is determined from the TC curve, see "TC-curve", page 67.

Intermediate values, e.g. (α_x in the case of T_x) between two determined values (α_3 in the case of T_3) and (α_4 in the case of T_4) are approximated linearly.

With the TC determined, the compensated electric conductance is calculated as in the case of the linear temperature compensation.

NOTE!

If the measured temperature is less than the starting temperature, compensation is done with the first TC.
If the measured temperature is greater than the final temperature, compensation is done with the last TC.

$$\gamma_{(Comp)} = \frac{\gamma_{(Meas)}}{\left(1 + \frac{\alpha_x}{100} * (T_x - T_{Ref})\right)}$$

11 Calibration

Sequence of the automatic calibration

The TC curve is plotted automatically in a temperature range determined by the user. Here, the temperature range from the starting to the final temperature is divided into 5 equal sections.

The temperature range must be greater than 20 Kelvin and overlap the reference temperature.
Example: Reference temperature 25°C, starting temperature 18°C and final temperature 50°C.

NOTE!

The temperature changing speed may not exceed

- 10 K/min in case of a free-standing temperature sensor and
- 1 K/min in case of an integrated temperature sensor!

Precondition

- the device must be supplied with power, see chapter 7 "Installation", page 33ff.
- The sensor must be connected to the transmitter (in case of "shouldered" construction).
- The transmitter is in "Measurement mode".

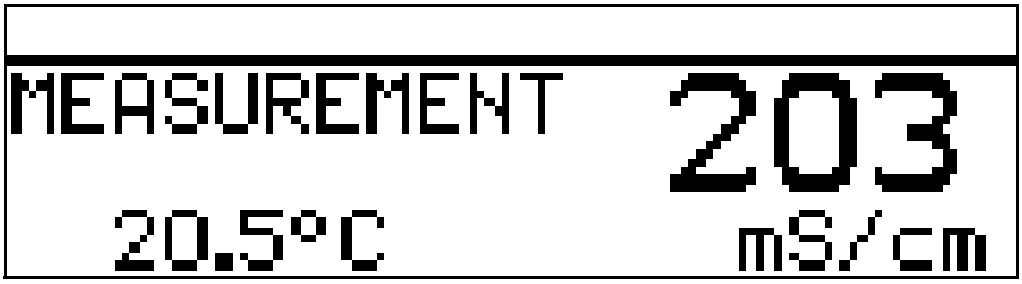

✱ Submerge the conductivity sensor in a sample of the measurement solution.

✱ Press the key PGM for longer than 3 seconds.

✱ With the keys ▼ or ▲, select "CALIBRATION-LEVEL". with key PGM, confirm the selection.

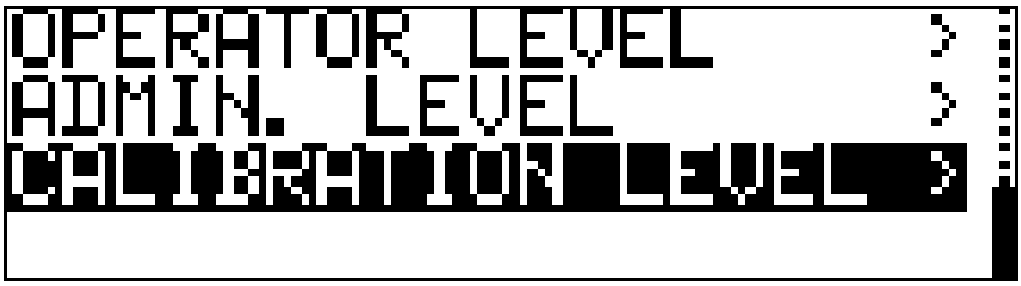

✱ With the keys ▼ or ▲, select "TEMPCO. N-LINEAR". with key PGM, confirm the selection.

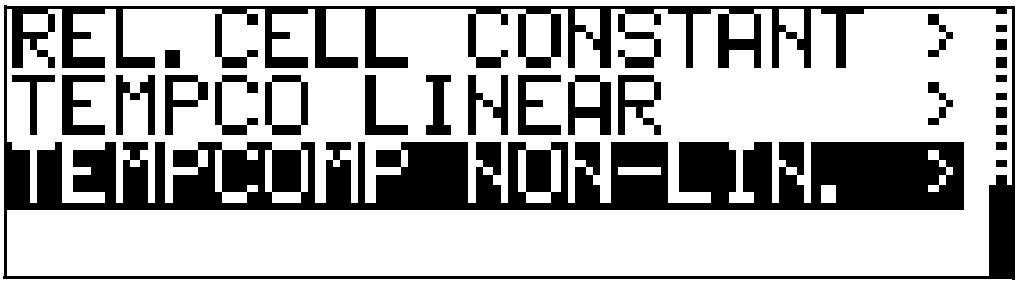

✱ With the keys ▼ or ▲, input the starting temperature and confirm with the PGM key .

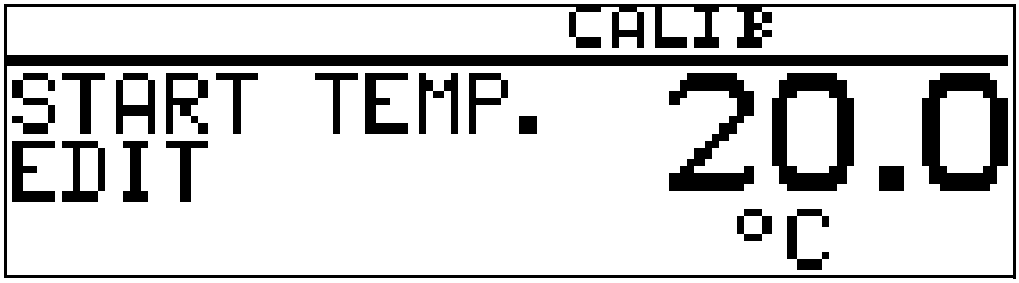

NOTE!

The starting temperature must be below the reference temperature (25.0 °C).

✱ With the keys ▼ or ▲, input the final temperature and confirm with the PGM key .

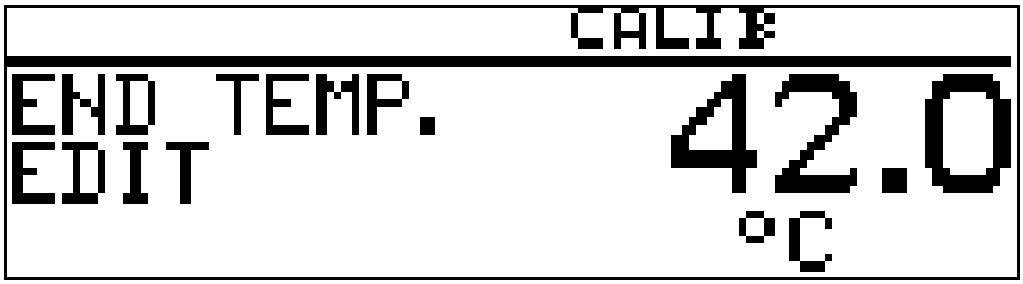

NOTE!

The final temperature must be at least 20 °C above the starting temperature.

The transmitter automatically determines the temperature data points.
The LC display now shows

- at the top (1) the next temperature to be reached (flashing)
- below that (2), the current sensor temperature (static)

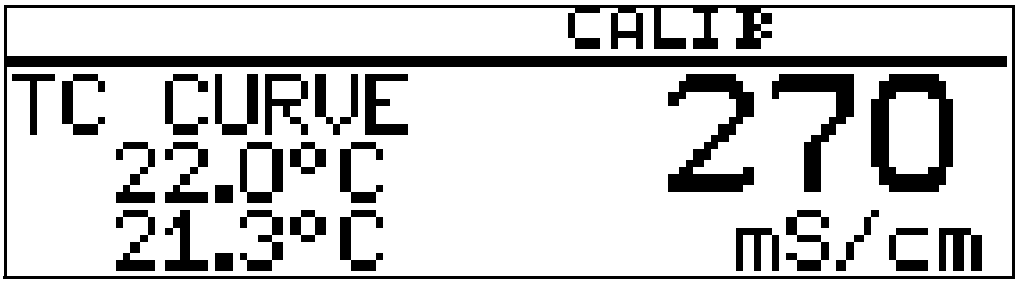

✱ Heat the measurement medium till the flashing temperature is exceeded or undershot.
The next temperature to be reached is displayed flashing.

CAUTION!

During the calibration, the temperature changing speed of the measurement solution of
10 K/min in the case of the device with a free-standing temperature sensor
or
1 K/min in the case of the device with an integrated temperature sensor
must not be exceeded.

As soon as one of the target temperatures is reached, its display becomes static (not flashing).

✱ Heat the measurement medium till the flashing temperature is exceeded.

✱ Repeat the procedure till all 6 temperature coefficients are determined by the device.

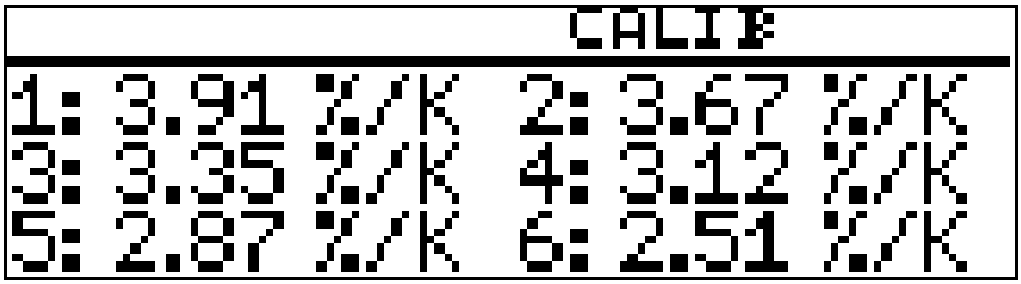

The LC-display now shows the determined temperature coefficients in %/K.

✱ Accept the temperature coefficients determined -> press the key (PGM) for longer than 3 seconds, or
discard the values -> press the key (EXIT) .

The transmitter is in the "Calibration menu".

✱ Press key (EXIT);
The transmitter is in "Measurement mode" and displays the compensated conductivity of the reference solution.

12.1 Conductivity-clean sensor



CAUTION!

Do not use any solvents.

Stubborn sediments or deposits can be dissolved with dilute hydrochloric acid and removed.

Comply with the safety specifications.

Deposits

Deposits on the sensor part can be removed with a soft brush (e.g. bottle brush).

13 Rectifying errors and faults

Error possibilities

Problem	Possible cause	Measure
No display of measured value or signal output	Voltage supply absent	Check voltage supply, check terminals
Measured value display 000 or signal output 0 % (e.g. 4 mA)	Sensor not submerged in medium; Tank level too low	Fill up tank
	Flow meter blocked	Clean the flow meter
	Sensor faulty	see "Device checking", page 73
Measured value display 8888 flashing + device status ALARM flashing. The temperature display is OK or LED 1 + LED 2 flashing	Out of range => the measurement/ display range was exceeded or undershot	select suitable measurement range or check the concentration table
Measured value display 8888 flashing + device status ALARM flashing. The temperature display is 8888 flashing or LED 1 + LED 2 flashing	The temperature sensor is faulty	The transmitter or the conductivity sensor must be replaced. or set measured value acquisition "Inflow temperature" briefly to manual, see "INFLOW TEMPERATURE", page 50.
wrong or varying measured value display	Sensor not submerged deep enough	Fill the tank
	no blending taking place	ensure good blending near the sensor, ensure clearance of about 5 mm for circulation
	Air bubbles	Check installation location, see "General", page 19.

13.1 Device checking

General

The device is calibrated at the factory and is maintenance-free. If measurement value variations from unknown causes should occur nonetheless, the transmitter can be checked as follows.

13.1.1 Checking with resistance loop

Cell constant

CAUTION!

The cell constant of the device depends on the design type!

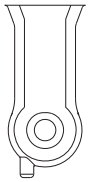	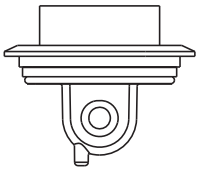	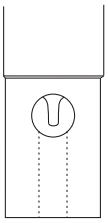
PEEK K = 5.0 1/cm	PEEK K = 5.15 1/cm	PVDF K = 5.45 1/cm

Position of the resistance loop

CAUTION!

When calibrating the sensitive part of the measurement cell, do not place on or touch any surface, else the measured value will get falsified.

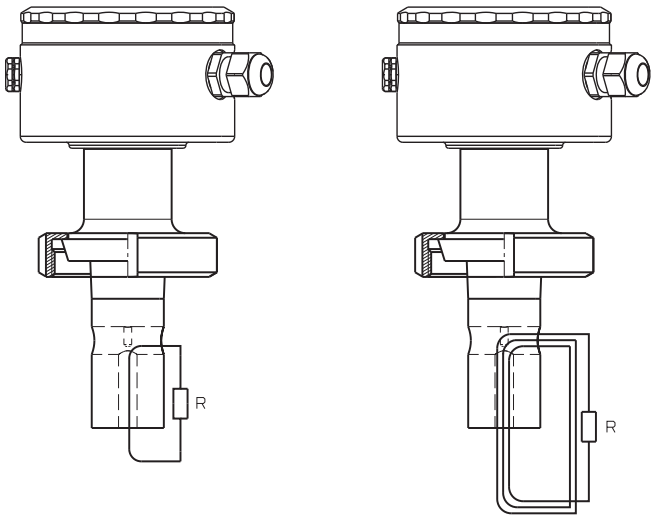

✱ Lead a wire through the measurement cell (see Figure)

✱ Connect the resistance R to the wire

Calculation of the resistance

Formula for calculation of the resistance of the resistance loop:

$$R = \frac{N^2 \cdot K}{Lf}$$

R Resistance of the resistance loop
N Number of turns in the loop
K Cell constant
Lf desired display in S/cm

Remark: 1 mS/cm = $1 \cdot 10^{-3}$ S/cm
1 µS/cm = $1 \cdot 10^{-6}$ S/cm

In case of display values up to 20 mS, the resistance loop must have 1 turn.
In case of display values from 50 mS onwards, the resistance loop must have 3 turns.

Example 1

The device with Tee-shaped measuring cell should display 20 mS:

$$R = \frac{1^2 \cdot 5.45\ 1/cm}{20 \cdot 10^{-3}\ S/cm} = 272.5\ \Omega$$

To get a display of 20 mS/cm, the resistance loop (with 1 turn) must have a resistance of 272.5 Ohm.

Example 2

The device with Tee-shaped measuring cell should display 500 mS:

$$R = \frac{3^2 \cdot 5{,}45\ 1/cm}{500 \cdot 10^{-3}\ S/cm} = 98{,}1\ \Omega$$

To get a display of 500 mS/cm, the resistance loop (with 3 turns) must have a resistance of 98.1 Ohm.

Pre-calculated values

The display value 0 is reached when the following conditions are met:

- The sensor is dry
- The sensor is free of any conducting coats
- No resistance loop is mounted.

Display at measuring range end	**No. of turns**	**Cell constant** [1/cm]	**Required resistance** [W]
500 µS/cm	1	5,0	10,000
1000 µS/cm			5,000
2000 µS/cm			2,500
5000 µS/cm			1,000
10 mS/cm			500
20 mS/cm			250
50 mS/cm	3		900
100 mS/cm			450
200 mS/cm			225
500 mS/cm			90
1000 mS/cm			45
2000 mS/cm			22,5

Carry out test

✱ Determine test resistance.

✱ Connect the device electrically, see chapter 7 "Installation", page 33.

✱ Put the resistance loop in place in accordance with the figure.

13.1.2 Testing with reference fluid

Put in test solution

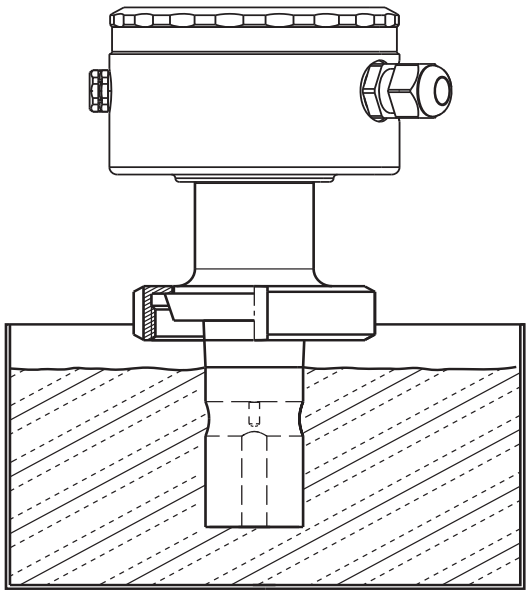

Carry out test

- ✱ Prepare the conductivity test solution in a sufficiently large container
- ✱ Connect the device electrically, see chapter 7 "Installation", page 33.
- ✱ Select the measurement range according to the conductivity test solution, see chapter 10.5.1 "INPUT CONDUCTIVITY (Input conductivity)", page 47 -> MEASUREMENT RANGE 1...4
- ✱ Set TC to 0 %/K, see chapter 10.5.1 "INPUT CONDUCTIVITY (Input conductivity)", page 47 -> TEMP.COEFFICIENT.
- ✱ Submerge the measurement cell in the container and do not move any more during the measurement.

13.1.3 Testing with reference measuring instrument

Put in test solution

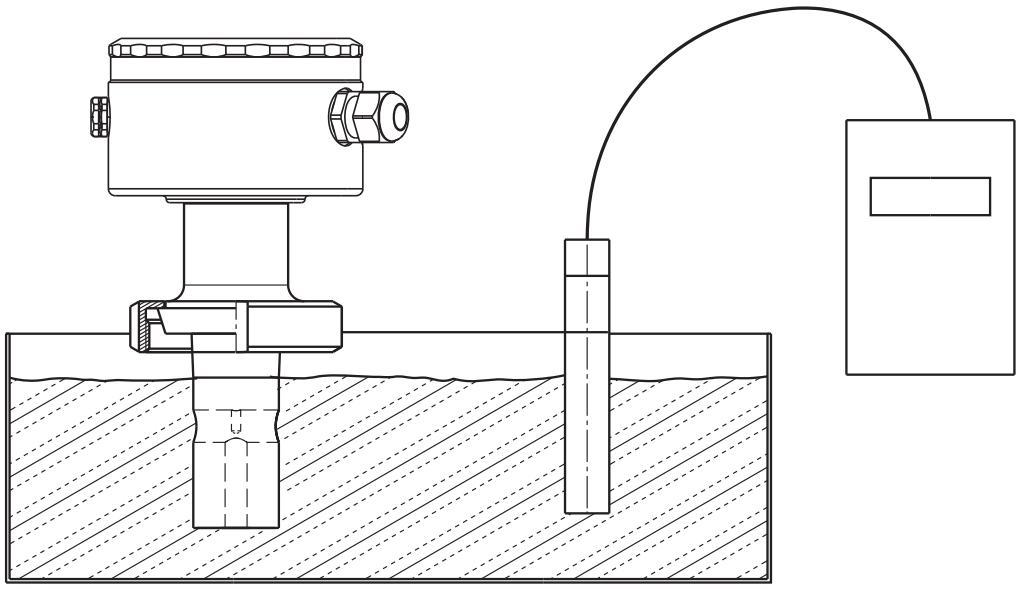

Carry out test

- ✱ Prepare the conductivity test solution in a sufficiently large container
- ✱ Connect the device electrically, see chapter 7 "Installation", page 33.
- ✱ Select the measurement range according to the conductivity test solution, see chapter 10.5.1 "INPUT CONDUCTIVITY (Input conductivity)", page 47 -> MEASUREMENT RANGE 1...4
- ✱ Set TC to 0 %/K, see chapter 10.5.1 "INPUT CONDUCTIVITY (Input conductivity)", page 47 -> TEMP.COEFFICIENT.
- ✱ Set the TC of the reference instrument also to 0 %/K (see operating manual of the reference instrument). If that is not possible, the liquid sample must be tempered to the reference temperature of the reference instrument.
- ✱ Submerge the measuring cell to be tested and the measuring cell of the reference instrument in the tank and do not move them any more at all during measurement.
- ✱ The output and the display of the instrument to be tested or the display of the display device connected to it and that of the reference device connected to it must match after taking the permissible instrument errors into account.

14 Annex

14.1 Before configuring

If many parameters of the device are to be re-configured, it is advisable to make a note of all the parameters to be changed in the following table, and to process the parameters in the given sequence.



NOTE!

The following list shows the maximum number of modifiable parameters.

Depending on the configuration, some of the parameters are not modifiable (editable) in this device.

Parameter	Selection/Range of values **Factory setting**	New setting	see page
Input, conductivity			
Measurement range 1...4	0 to 500 µS/cm **0 to 1000 µS/cm** 0 to 2000 µS/cm 0 to 5000 µS/cm 0 to 10 mS/cm 0 to 20 mS/cm 0 to 50 mS/cm 0 to 100 mS/cm 0 to 200 mS/cm 0 to 500 mS/cm 0 to 1000 mS/cm 0 to 2000 mS/cm (uncompensated)		47
Temperature compensation	**linear** non-linear natural water		47
Temperature coefficient 1...4	0 to **2.20** to 5.5 %/K		47
Reference temperature	15.0 to **25.0** to 30 °C		47
Cell constant	2.00 to **6.80** to 10.00 1/cm		47
Relative cell constant	80.0 to **100.0** to 120.0 %		47
Mounting factor	80,0 to **100.0** to 120,0 %		47
Concentration measurement	**no function** NaOH HNO_3 customer-specific		48
Offset	-200 to **0** to +200 mS/cm		48
Filtering time	**00:00:01** to 00:00:25 H:M:S		48
Calibration interval	**0** to 999 days		48
Output, conductivity			

Parameter	Selection/Range of values **Factory setting**	New setting	see page
Signal type	0 to 20 mA **4 to 20 mA** 20 to 0 mA 20 to 4 mA 0 to 10 V 2 to 10 V 10 to 0 V 10 to 2 V		49
Scaling, beginning	**0** to 90 % = 4 mA (e.g.) from the measurement range scope		49
Scaling: End	**100** to 10 % = 20 mA (e.g.) from measurement range scope		49
In case of an alarm	**low** high safety value		49
At the time of calibration	**accompanying** frozen safety value		49
Safety value	0.0 to **4.0** to 22.0 mA		49
Manual operation	**off** on		49
Manual value	0.0 to **4.0** to 22.0 mA		49
Inflow temperature			
Unit	**°C** °F		50
Measurement value acquisition	**Sensor** manual		50
Manual specification	-20.0 to **25** to 150 °C		50
Offset	-15.0 to **0.0** to +15 °C		50
Filtering time	00:00:00 to **00:00:01** to 00:00:25 H:M:S		50
Outflow temperature			
Signal type	0 to 20 mA **4 to 20 mA** 20 to 0 mA 20 to 4 mA 0 to 10 V 2 to 10 V 10 to 0 V 10 to 2 V		50
Scaling, beginning	-20 to **0.0** to 183 °C = 4 mA (0 to 90 % of measurement range scope)		50
Scaling: End	-3 to **150** to 200 °C = 20 mA (100 to 10 % of measurement range scope)		50

14 Annex

Parameter	Selection/Range of values **Factory setting**	New setting	see page
In case of an alarm	**low** high safety value		49
At the time of calibration	**accompanying** frozen safety value		49
Safety value	0.0 to **4.0** to 22.0 mA		50
Manual operation	**off** on		49
Manual value	0.0 to **4.0** to 22.0 mA		49
Output binary 1 or binary 2			
Function	**no function** Conductivity min.-contact Conductivity Max.-contact Conductivity LK1 Conductivity LK2 Conductivity Min.-contact Conductivity Max.-contact Conductivity LK1 Conductivity LK2 Calibration timer Alarm		51
Limit value	**0.0** to 9999.0		52
Hysteresis	0.0 to **1.0** to 999.0		52
Distance	**0.0** to 999.0		52
Manual operation	**off** on		52
in case of Hold	**inactive** active frozen		52
in case of alarm / calibration	**inactive** active frozen		52
Switch-on delay	**00:00:00** to 01:00:00 H:M:S		52
Switch-off delay	**00:00:00** to 01:00:00 H:M:S		52
Pulse duration	**00:00:00** to 01:00:00 H:M:S		52
Input binary			
Function	**no function** Keyboard locking/Hold Measurement range/Temperature coefficient desalination function		53
Desalination function			
Reduction	0 to **10** to 50 %		53

Parameter	Selection/Range of values **Factory setting**	New setting	see page
Dosing time	00:00:00 to **00:01:00** to 18:00:00 H:M:S		53
Locking time	00:00:00 to **00:01:00** to 18:00:00 H:M:S		53
Device data			
Language	**German** English French Spanish Polish Swedish Italian Portuguese Dutch Russian		54
Contrast	0 to **6** to 11		54
Lighting	off on **at the time of operation**		54
Inverse LCD	**off** on		54

14 Annex

部件名称 Product group: 202756	有毒有害物质或元素 Hazardous substances					
	铅（Pb）	汞（Hg）	镉（Cd）	六价铬（Cr(VI)）	多溴联苯（PBB）	多溴二苯醚（PBDE）
外壳 Housing (Gehäuse)	○	○	○	○	○	○
过程连接 Process connection (Prozessanschluss)	○	○	○	○	○	○
-螺母 Nut (Mutter)	X	○	○	○	○	○
螺钉 Screw (Schraube)	X	○	○	○	○	○

本表格依据 SJ/T 11364-2014的规定编制。

(This table is prepared in accordance with the provisions of SJ/T 11364-2014.)

O：表示该有害物质在该部件所有均质材料中的含量均在 GB/T 26572 规定的限量要求以下。

(O: Indicates that said hazardous substance contained in all of the homogeneous materials for this part is below the limit requirement of GB/T 26572.)

X：表示该有害物质至少在该部件的某一均质材料中的含量超出 GB/T 26572 规定的限量要求。

(X: Indicates that said hazardous substance contained in one of the homogeneous materials used for this part is above the limit requirement of GB/T 26572.)

16 Index

A

Alarm window *51*
At the time of calibration *49–50*, *79–80*

B

Biocide *57*

C

Calculation of a temperature coefficient *66*
Calibration interval *48*, *78*
Cell constant *47*, *78*
Character
    note *5*
CIP *8*
CIP-Process *8*
CONCENTR. RANGE *48*
Concentration measurement *48*, *78*
Configurable parameters *39*
Configuration *78*
Connection *39*
Contrast *54*, *81*

D

Deposits *8*, *71*
Desalination *8*
Desalination function *53*, *57*, *80*
    Start *53*
    Stop *53*
Desalination reduction *57*
Desalination valve *57*
Determining the TC-curve *66*
Device data *54*, *81*
Distance *52*, *80*
Dosing time *53*, *81*

E

Electrical connection *33*
Electromagnetic compatibility *33*
Error possibilities *72*
Explosion-endangered areas *33*

F

Filtering time *48*, *50*, *78–79*
Function *51*, *53*, *80*

G

Galvanic separation *39*

H

Hold-function *53*
HYSTERESIS *52*

I

In case of alarm *49–50*, *79–80*
In case of alarm/calibration *52*, *80*
In case of hold *52*, *80*
Inflow temperature *50*, *79*
Input binary *53*, *80*
Input conductivity *47*
Input, conductivity *78*
Installation location *19*
Inverse LCD *54*, *81*

K

Keyboard lock *53*

L

Language *54*, *81*
Levels of the Administrator level *55*
Lighting *54*, *81*
Limit value *52*, *80*
Locking time *53*, *81*

M

Manual operation *49*, *51–52*, *79–80*
Manual specification *50*, *79*
Manual value *49*, *51*, *79–80*
Measurement process *8*
Measurement range *47*, *78*
Measurement range/Temperature coefficient switching *53*
Measurement value acquisition *50*, *79*
Mounting factor *19*, *47*, *78*
Mounting location *19*

N

Non-linear temperature coefficient *66*
Note signs *5*

O

Offset *48*, *50*, *78–79*
Operating in levels *45*
Operation *43*
Outflow temperature *50*, *79*
Output binary *51*, *80*
Output conductivity *49*
Output, conductivity *78*

P

Parameters, configurable *39*
Password *54*
Polarization *8*
Pre-calculated values *75*

Pulse duration *52*, *80*

R

Re-configuring *78*
Reduction *53*, *80*
Reference fluid *76*
Reference measuring instrument *77*
Reference temperature *47*, *78*
Relative cell constant *47*, *78*
Resistance loop *73*

S

Safety value *49–50*, *79–80*
Scaling
    end *49–50*, *79*
    start *49–50*, *79*
Setting parameters *53*
Setup interface *39*
Signal type *49–50*, *79*
Solvent *71*
Sunlight *19*
Switch-off delay *52*, *80*
Switch-on delay *52*, *80*

T

TC-curve *67*
Temperature coefficient *47*, *78*
Temperature compensation *47*, *78*
    with the TC-curve *67*

U

Unit *50*, *79*

V

Voltage supply *15*

W

Wiper contact *52*

JUMO GmbH & Co. KG
Street address:
Moritz-Juchheim-Straße 1
36039 Fulda, Germany
Delivery address:
Mackenrodtstraße 14
36039 Fulda, Germany
Postal address:
36035 Fulda, Germany
Phone: +49 661 6003-0
Fax: +49 661 6003-607
Email: mail@jumo.net
Internet: www.jumo.net

JUMO Instrument Co. Ltd.
JUMO House
Temple Bank, Riverway
Harlow, Essex, CM20 2DY, UK
Phone: +44 1279 63 55 33
Fax: +44 1279 62 50 29
Email: sales@jumo.co.uk
Internet: www.jumo.co.uk

JUMO Process Control, Inc.
6733 Myers Road
East Syracuse, NY 13057, USA

Phone: +1 315 437 5866
Fax: +1 315 437 5860
Email: info.us@jumo.net
Internet: www.jumousa.com

