JUMO CTI-750

Inductive Conductivity/Concentration and Temperature Transmitter with switch contacts



Operating Manual

20275600T90Z002K000

V5.00/EN/00452846

WARNING!

A sudden failure of the device or of a sensor connected to it could result in dangerous overdosing. Please take suitable precautionary measures for this case.

NOTE!

All the nececssary settings are described in this manual. However, if any difficulties should arise during start-up, please do not carry out any unauthorized manipulations. You could endanger your righs under the device warranty!

NOTE!

Resetting the LC display
If the brightness/contrast setting is such that the text in the display is not readable, the basic setting can be restored as follows:

* Switch off the supply voltage.
* Switch on the supply voltage and immediately keep the keys ▼ and ▲ held down.

Resetting the operating language to "English"
If the operating language has been set and you cannot understand the text of the display, the language can be set to "English" with the Administrator password 7485. Thereafter, the desired language can be set in ADMINISTRATOR LEVEL / DEVICE DATA / .... .

Contents

1 Typographical conventions 5
1.1 Warning signs 5
1.2 Note signs 5

2 General 6
2.1 Preface 6
2.2 Device configuration 6

3 Inductive conductivity measurement 8
3.1 Area of application 8
3.2 Function 9

4 Identifying the device version 10
4.1 Nameplate 10
4.2 Order details 11

5 Device description 15
5.1 **Technical data** 15

6 Installation 19
6.1 General 19
6.2 Head transmitter dimensions 20
6.3 Device with separate sensor 24
6.4 Mounting examples 30

7 Installation 33
7.1 **General** 34
7.2 Electrical connection 35

8 Setup program 40
8.1 Function 40

9 Commissioning 41
9.1 Head-mounted transmitter or transmitter with separate sensor 41
9.2 Replacement sensor 41

10 Operation 42
10.1 Controls 42

Contents

10.2 Principle of operation 44
10.3 Principle of operation 46
10.4 Measurement mode 47
10.5 Operator level 47
10.6 Administrator level 55
10.7 Calibration level 57
10.8 Dilution function 58

11 Calibration 62
11.1 General 62
11.2 Calibrating the relative cell constant 62
11.3 Calibrating the temp. coefficient of the sample solution 64

12 Maintenance 72
12.1 Cleaning the conductivity sensor 72

13 Eliminating faults and malfunctions 73
13.1 Checking the device 74

14 Appendix 79
14.1 Before configuration 79

15 China RoHS 83

1.1 Warning signs



DANGER!

This symbol is used when there may be **danger to personnel** if the instructions are ignored or not followed correctly!



CAUTION!

This symbol is used when there may be **damage to equipment or data** if the instructions are ignored or not followed correctly!

1.2 Note signs



NOTE!

This symbol is used when your **special attention** is drawn to a remark.

abc[1]

Footnote

Footnotes are remarks that **refer to specific points** in the text. Footnotes consist of two parts:

A marker in the text, and the footnote text.

The markers in the text are arranged as continuous superscript numbers.

✱

Action instruction

This symbol indicates that an **action to be performed** is described.

The individual steps are marked by this asterisk.

Example:

✱ Remove crosspoint screws.

2 General

2.1 Preface

Please read these operating instructions before commissioning the device. Keep the manual in a place that is accessible to all users at all times.

NOTE!

All necessary settings are described in this manual. However, if any difficulties should still arise during start-up, please do not carry out any unauthorized manipulations. You could endanger your rights under the device warranty!

Please contact the nearest subsidiary or the head office in such a case.

2.2 Device configuration

2.2.1 Device as head transmitter

Example

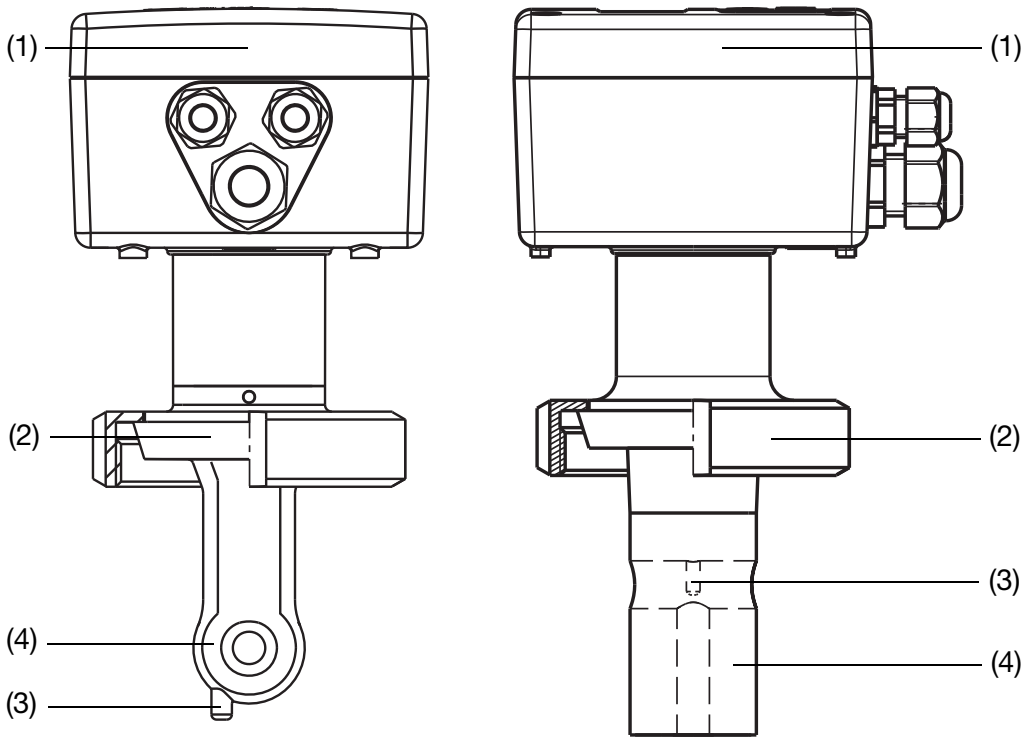

(1) Transmitter (with and without graphic LCD display)
(2) Process connection
(3) Temperature probe
(4) Inductive conductivity measurement sensor

2.2.2 Device with separate sensor

Example

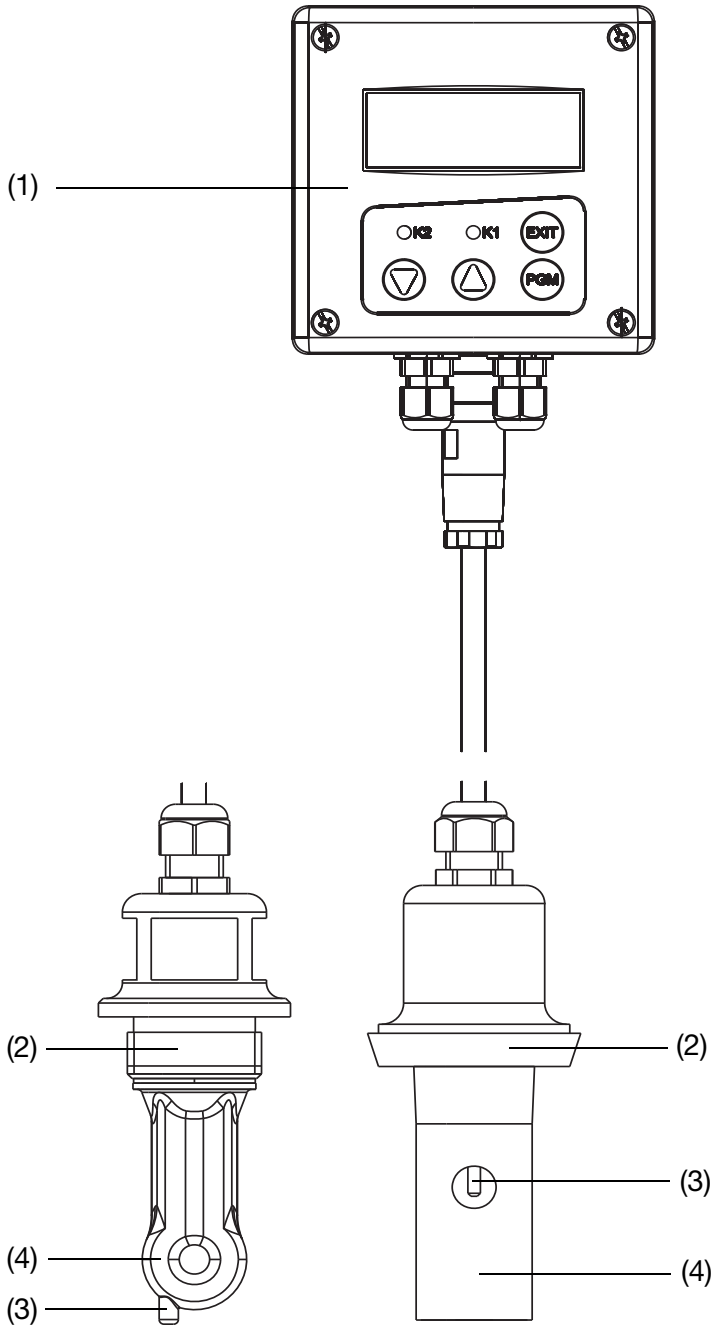

(1) Transmitter (with and without graphic LCD display)
(2) Process connection
(3) Temperature probe
(4) Inductive conductivity measurement sensor

3 Inductive conductivity measurement

3.1 Area of application

General

The inductive measurement method permits largely maintenance-free acquisition of the specific conductivity, even in difficult media conditions. Unlike the conductive measurement method, problems such as electrode decomposition and polarization do not occur.

Brief description

The device is used for the measurement/control of conductivity or concentration in liquid media. It is particularly recommended for use in media where severe deposits of dirt, oil, grease or gypsum/lime precipitates are to be expected. The integrated temperature measurement enables fast and accurate temperature compensation, which is of particular importance when measuring conductivity. Additional functions, such as the combined changeover of measurement range and temperature coefficient, enable optimum application in CIP processes.

Two built-in switching outputs can be freely programmed to monitor limits for conductivity/concentration and/or temperature. It is also possible to assign alarm and control functions (dilution).

The device is operated either from the membrane keypad and plain-text graphics display (operator language can be changed over) or through the user-friendly PC setup program. Simply rotating the housing cover makes it possible to read the display, regardless of whether the installation is in horizontally or vertically arranged pipes. By using the setup program, the device configuration data for plant documentation can be saved and printed out. To prevent any tampering, the device can also be supplied without keypad or display. In this case, the setup program is needed for programming.

The device is available either as a combined unit (transmitter and measuring cell together in one unit) or as a split version (transmitter and cell connected by cable). The split version is particularly suitable for plant subjected to strong vibration and/or significant heat radiation at the point of measurement, or for installation on sites that are difficult to access.

Typical areas of application

- CIP cleaning (CIP = **C**lean **I**n **P**lace/**P**rocess)
- concentration monitoring or dosing of chemicals
- food/beverage and pharmaceutical industries
- product monitoring (phase separation of product/product mix/water) in the beverage industry, breweries, dairies
- control (e.g. phase separation of detergent/rinsing water in cleaning processes, e.g. bottle cleaning plant, or for container cleaning)

3.2 Function

of the transmitter

The device has been designed for use on site. A rugged housing protects the electronics and the electrical connections from corrosive environmental conditions (enclosure IP67). As standard, the device has one analog signal output each for conductivity/concentration and temperature respectively. Further processing of the standard signals can take place in a suitable display/ control device, or, for example, directly in a PLC.

The output signals are electrically isolated from one another and from the medium.

of the measuring cell

The conductivity is measured using an inductive probe. A sinusoidal a.c. voltage feeds the transmitting coil. Depending on the conductivity of the liquid to be measured, a current is induced in the receiver coil. This current is proportional to the conductivity of the medium. The cell constant of the inductive probe depends on its geometry. The cell constant can also be affected by components in the immediate vicinity.

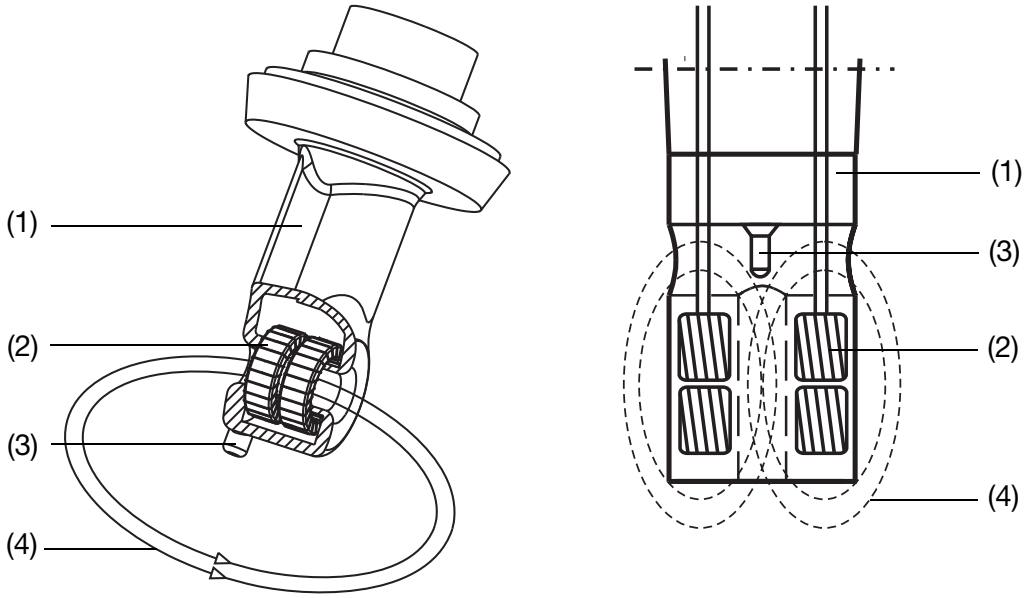

(1) Plastic body
(2) Coils
(3) Temperature sensor
(4) Liquid loop

4 Identifying the device version

4.1 Nameplate

On the transmitter

The nameplate is affixed to the case.

On the separate sensor

The nameplate (flag tag) is affixed to the connecting cable.

Contents

The nameplate contains important information. This includes:

Description	Description on the nameplate	Example
Device type	Typ	202756/15-607-0000-82/ 767,941
Fabrication number	F-Nr	0220565701018110001
Voltage supply	-	DC 19 ... 31 V

Device type (Typ)

Compare the specifications on the nameplate with the order.
Identify the supplied device version using the order details (order code).

Fabrication number (F-Nr)

Among other things, the fabrication number contains the date of production (year/week).
Example: F-Nr = 022056570101**811**0001
The characters in question are in positions 12 to 15 (from the left).
The device was therefore produced in the year 20**18** in its **11**th calendar week.



For devices with a separate sensor, the transmitter and detached sensor are matched to one another at the factory!
When connecting the components, please note that the serial number of the external sensor (marked on the flag tag attached to the connecting cable) must match the serial number marked on the nameplate of the transmitter!

4.2 Order details

4.2.1 The device as "Head transmitter"

	(1)	Basic type
202756/10		JUMO CTI-750 head transmitter in plastic housing, without display/keypad[a]
202756/15		JUMO CTI-750 head transmitter in plastic housing, with display/keypad
202756/16		JUMO CTI-750 head transmitter in stainless steel housing, with display/keypad
	(2)	**Process connection**
108		Screw connection G 1 ½ A
110		Screw connection G 2 A
607		Taper socket with union nut DN 50 DIN 11851 (dairy pipe fitting)
608		Taper socket with union nut DN 65 DIN 11851 (dairy pipe fitting)
609		Taper socket with union nut DN 80 DIN 11851 (dairy pipe fitting)
617		Clamping socket (Clamp) 2 ½"[b], similar to DIN 32676
686		VARIVENT® connection DN 50/40 [b, c, d]
690		SMS DN 2"
	(3)	**Insertion length**
0000		See “Dimensions for head transmitter"
	(4)	**Electrical connection**
82		Cable glands[e]
83		M12 plug/socket connectors (instead of the cable glands)[f]
84		Two M16 cable glands and one blanking plug[g]
	(5)	**Extra code**
268		Internal temperature sensor
767		Cell material PEEK[h]
768		Cell material PVDF[i]
844		Supply voltage 24 V AC
941		Hygienic design

[a] The PC setup program is required for programming the device, see accessories.
[b] Mounting items (mounting brackets) not included in delivery.
[c] Only in conjunction with extra code 767 (cell material PEEK).
[d] Hygienic process connection.
[e] Not for basic type 202756/16.
[f] If required, order 1 set M12 plug/socket connectors, part no. 00529482.
[g] Standard on basic type extension 16.
[h] Temperature sensor always internal.
[i] Not in combination with extra code 941.

	(1)		(2)		(3)		(4)		(5)	
Order code		/		-		-		/		, ...[a]
Order example	202756/10	/	607	-	0000	-	82	/	767	

[a] List extra codes in sequence, separated by commas.

4.2.2 The device as "Transmitter with separate sensor"

	(1)	Basic type extension
202756/20		JUMO CTI-750 transmitter in plastic housing, without display/keypad (without sensor) [a, b]
202756/25		JUMO CTI-750 transmitter in plastic housing, with display/keypad (without sensor) [b]
202756/26		JUMO CTI-750 transmitter in stainless steel housing, with display/keypad (without sensor) [b]
202756/60		JUMO CTI-750 transmitter in plastic housing, without display/keypad (with sensor) cable length 10 m [a]
202756/65		JUMO CTI-750 transmitter in plastic housing, with display/keypad (with sensor) cable length 10 m
202756/66		JUMO CTI-750 transmitter in stainless steel housing, with display/keypad (with sensor) cable length 10 m
202756/80		JUMO CTI-750 replacement sensor with 10 m cable for transmitter in plastic housing (without transmitter)[b, c]
202756/85		JUMO CTI-750 replacement sensor with 10 m cable for transmitter in stainless steel housing (without transmitter)[b, c]
	(2)	**Process connection**
000		Without process connection
108		Screw connection G 1 ½ A
110		Screw connection G 2 A
607		Taper socket with union nut DN 50 DIN 11851 (dairy pipe fitting)
608		Taper socket with union nut DN 65 DIN 11851 (dairy pipe fitting)
609		Taper socket with union nut DN 80 DIN 11851 (dairy pipe fitting)
617		Clamping socket (Clamp) 2 ½"[c], similar to DIN 32676
686		VARIVENT® connection DN 50/40 [c, d, e]
690		SMS DN 2"
706		Immersion model[f]
	(3)	**Insertion length** (see "Dimensions for separate sensor")[f]
0000		Not available
0500		500 mm
1000		1000 mm
1500		1500 mm
2000		2000 mm
xxxx		Special length (in 250 mm increments, e.g. 0250, 0750, 1250, 1750)
	(4)	**Electrical connection**
21		Fixed cable with M12 socket connector on separate sensor[g]
82		Cable glands on the operating unit
83		M12 plug/socket connectors on operating unit
	(5)	**Extra code**
000		No extra code
268		Internal temperature sensor
767		Cell material PEEK[h]

768		Cell material PVDF[i]
844		Supply voltage 24 V AC
941		Hygienic design

[a] The PC setup program is required for programming the device, see accessories.
[b] A calibration kit is absolutely essential for commissioning. If not available, please include in your order (see accessories).
[c] Mounting items (mounting brackets) not included in delivery.
[d] Only in conjunction with extra code 767 (cell material PEEK).
[e] Hygienic process connection.
[f] Only in conjunction with extra code 768 (cell material PVDF).
[g] Only for basic types 202756/80 and /85.
[h] Temperature sensor always internal.
[i] Not in combination with extra code 941.

	(1)		(2)		(3)		(4)		(5)	
Order code		/		-		-		/		, ...[a]
Order example	202756/65	/	607	-	0000	-	82	/	000	

[a] List extra codes in sequence, separated by commas.

4 Identifying the device version

Accessories

Type	Part No.
Flange DN 32, material: PP	00083375
Flange DN 50, material: PP	00083376
Weld-on threaded adapter DN 50, DIN 11851	00085020
Ring nut DN 50, DIN 11851	00343368
Ring nut SMS DN 2“, Mutter	00345162
M12 plug connector, 8-pole, straight, for assembly by user	00444307
M12 socket connector, 8-pole, straight, for assembly by user	00486503
M12 socket connector, 8-pole, straight, for assembly by user	00444312
M12 socket connector, 5-pole, straight, for assembly by user	00444313
Connector set (TN 00444307 and TN 00444313) for 202755/202756 (PG209791)	00529482
Cover with LC-display and keyboard	00443725
Cover with LC-display and keyboard for VA-version	00525488
DIN rail mounting set	00459903
Pipe installation kit	00515128
Switching mode power supply, type PS5R-A24 for DIN rail mounting; Input voltage 100 ... 240 V AC	00374661
Adjustment set (for calibrating a replacement transmitter)	00459436
PC interface (USB/TTL), 2 adapter setup cable	00456352
Concentration curve for CTI-750 for input via setup software	00592816
Holder for wall mounting for CTI-750 in stainless steel housing	00477194

Software

Type	Part No.
Setup	00454710

5.1 Technical data

5.1.1 Conductivity transmitter

A/D converter	
Resolution	15 bits
Sampling time	500 ms = 2 measurements/s
Power supply	For SELV and PELV circuit operation only.
Standard	19 - 31 V DC (24 V DC nominal)
Residual ripple	<5 %
Reverse polarity protection	yes
Extra code 844	24 V DC ±10 %, 50 - 60 Hz
Power draw	
with display	≤ 3 W
without display	≤ 2,6 W
Contact rating of the PhotoMOS® relay	
Voltage	≤ DC 45 V ≤ AC 30 V
Current	≤ 200 mA
Electrical connection	
82	Cable glands/pluggable screw terminals, 2,5 mm^2
83	M12 plug/socket (instead of cable glands)
84	Two M16 cable glands and a pluggable screw terminal blanking plug, 2,5 mm^2
Display	
Basic type extension 10	without display
Basic type extension 15	Backlit graphic LCD; adjustable contrast; dimensions: 62 mm × 23 mm
Basic type extension 16	Backlit graphic LCD; adjustable contrast; dimensions: 62 mm × 23 mm
Permissible ambient temperature	5 to +50 °C; max. rel. humidity. 93 %, no condensation
Permissible storage temperature	-20 to +75 °C; max. rel. humidity. 93 %, no condensation
Protection rating[a]	IP67
Electromagnetic compatibility[b]	
Interference emission	Class B
Interference immunity	to industrial requirements
Housing	
Basic type extensions 10, 15, 20, 25, 60, 65	PA
Basic type extensions 16, 26, 66	Stainless steel 1.4305 (AISI 303)
Weight[c]	approx. 0,3 - 2,4 kg

[a] DIN EN 60529

[b] DIN EN 61326
[c] Dependent on version and process connection

5.1.2 Measuring ranges

There is a choice of four different measuring ranges. Any one of these ranges can be activated by an external switch or by a PLC.



NOTE!

The overall accuracy is composed of transmitter accuracy plus sensor accuracy.

Transmitter measuring ranges[a]	**Accuracy** (as % of measuring range span)
0 - 500 µS/cm	≤ 0,5 %
0 - 1000 µS/cm	
0 - 2000 µS/cm	
0 - 5000 µS/cm	
0 - 10 mS/cm	
0 - 20 mS/cm	
0 - 50 mS/cm	
0 - 100 mS/cm	
0 - 200 mS/cm	
0 - 500 mS/cm	
0 - 1000 mS/cm	
0 - 2000 mS/cm[b]	
Concentration measurement	implemented in the device software
NaOH (caustic soda)	0 - 15 % by weight or 25 - 50 % by weight (0 - 90 °C)
HNO_3 (nitric acid)	0 - 25 % by weight or 36 - 82 % by weight (0 - 80 °C)
Customer-specific concentration curve	freely programmable via the setup program (see "Special functions")
Calibration timer	0 - 999 days (0 = OFF)
Output signal conductivity and concentration[c]	0 - 10 V or 10 - 0 V 2 - 10 V or 10 - 2 V 0 - 20 mA or 20 - 0 mA 4 - 20 mA or 20 - 4 mA
Burden	
at current output	≤ 500 Ω
at voltage output	≥ 2k Ω
Ambient temperature effect	≤ 0,1 %/K
Analog output at "Alarm"	
Low	0 mA/0 V/3.4 mA/1.4 V or a fixed value
High	22.0 mA/0.7 V or a fixed value

[a] Typical application starting at approx. 100 µS/cm.
[b] Not temperature compensated.
[c] The output signal is freely scalable.

5.1.3 Temperature transmitters

Temperature acquisition[a]	Manually, -20.0 to 25.0 to 150 °C or °F, or automatically
Measuring range	-20 - 150 °C or °F
Characteristic	linear
Accuracy	≤ 0.5 % of the measuring range
Ambient temperature effect	≤ 0.1 %/K
Output signal	0 - 10 V or 10 - 0 V 2 - 10 V or 10 - 2 V 0 - 20 mA or 20 - 0 mA 4 - 20 mA or 20 - 4 mA The output signal is freely scalable in the -20 to +200°C range.
Burden at current output at voltage output	 ≤ 500 Ω ≥ 2k Ω
Analog output at "Alarm" Low High	 0 mA/0 V/3.4 mA/1.4 V or a fixed value 22.0 mA/10.7 V or a fixed value

[a] Take the permissible sample medium temperature into consideration!

5.1.4 Temperature compensation

Reference temperature	15 to 30 °C, adjustable
Temperature coefficient	5.5 %/°C, adjustable
Compensation range	-20 to 150 °C
Function	linear or natural water (EN 27888) or non-linear (learning function, see Special functions

5.1.5 Inductive conductivity sensor

Measuring range[a]	**Accuracy** (as % of measuring range span)
0 - 500 µS/cm	≤ 1 %
0 - 1000 µS/cm	≤ 1 %
0 - 2000 µS/cm	≤ 0,5 %
0 - 5000 µS/cm	≤ 0,5 %
0 - 10 mS/cm	≤ 0,5 %
0 - 20 mS/cm	≤ 0,5 %
0 - 50 mS/cm	≤ 0,5 %
0 - 100 mS/cm	≤ 0,5 %
0 - 200 mS/cm	≤ 0,5 %
0 - 500 mS/cm	≤ 0,5 %
0 - 1000 mS/cm	≤ 1 %
0 - 2000 mS/cm[b]	≤ 1 %
Material	
for extra code 767	PEEK
for extra code 768	PVDF
Permissible sample medium temperatures	-10 - +120 °C, briefly +140 °C (sterilization)
Pressure	max. 10 bar

[a] Typical application starting at approx. 100 µS/cm.
[b] Not temperature compensated



NOTE!

The temperature, pressure and process medium influence the operating life of the measuring cell.

6.1 General

6.1.1 Installation location

Make sure that the site is readily accessible, for calibration at a later time.

The fixing must be secure and free from vibration.

Avoid direct sunlight!

Take care that there is adequate flow through and around the sensor (2)!

If the device is to be mounted in a pipeline, there must be at least 20 mm clearance between the sensor and the wall of the pipe.
If it is not possible to achieve this minimum clearance, then a limited compensation can be made through the "Mounting factor" parameter.

For submerged operation in basins, a location must be chosen that is representative of the typical conductivity or concentration.

6.1.2 Mounting location

The device can be mounted in any position.

The display can be adjusted by means of a captive screw according to the mounting direction.

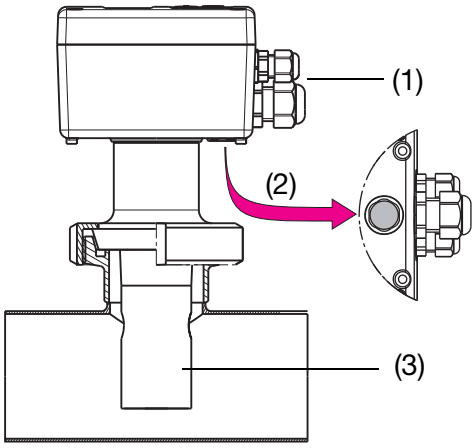

ACHTUNG!

With head transmitters, the PG cable glands (1) must point in the flow direction!

With separate conductivity sensors, the flow direction is indicated by a dot on the upper part of the sensor.
This dot must point in the flow direction!

With "overhead installation" the black breather (2) points upwards. In this case, **no** liquid (such as condensate) must be allowed to block the breather (2)!

6.1.3 Screwing the separate sensor in and out

CATUION!

The cable must not be twisted!
Avoid forcefully tugging the cable, especially suddenly.

6 Installation

6.2 Head transmitter dimensions

6.2.1 Operating device

Head transmitter in a plastic casing
for basic type extensions 10 or 15 and electrical connection 83

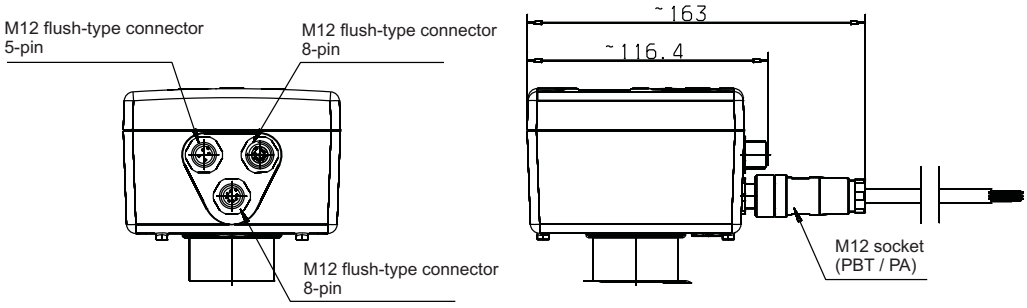

6.2.2 Process connections

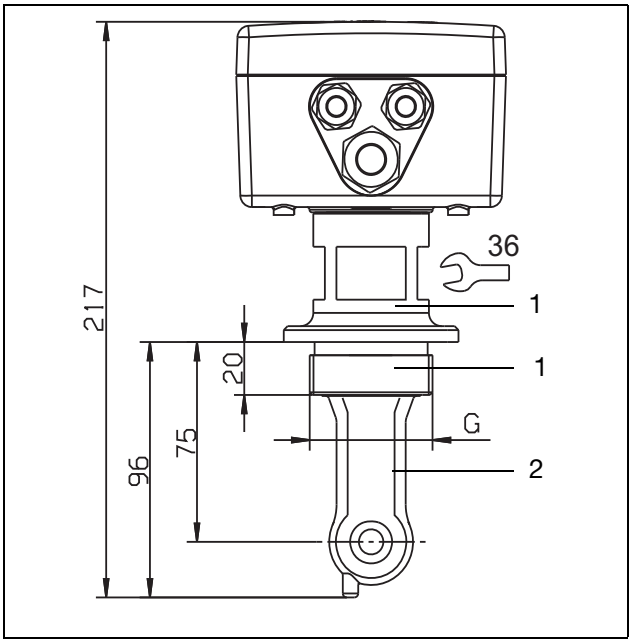

Version with process connection
108 = screw-in thread G 1 1/2 A
110 = screw-in thread G 2 A

and extra code 767

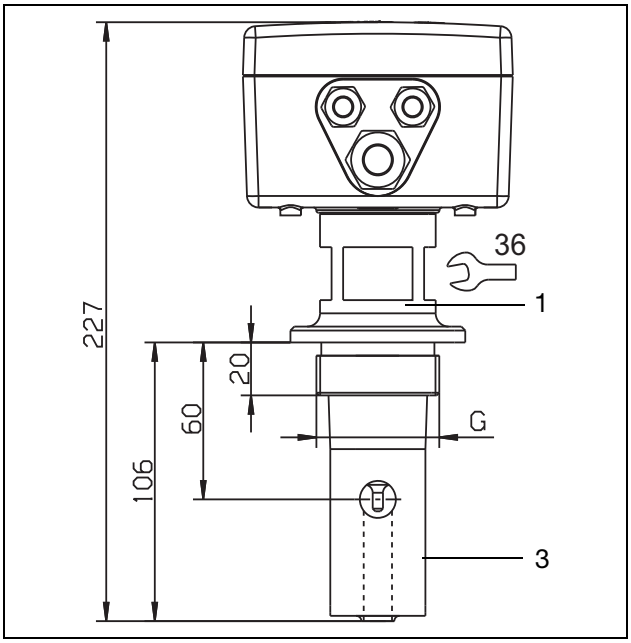

Version with process connection
107 = screw-in thread G 1 1/4 A
108 = screw-in thread G 1 1/2 A
110 = screw-in thread G 2 A
and extra code 768

1 = stianless steel 1.4301 2 = PEEK 3 = PVDF

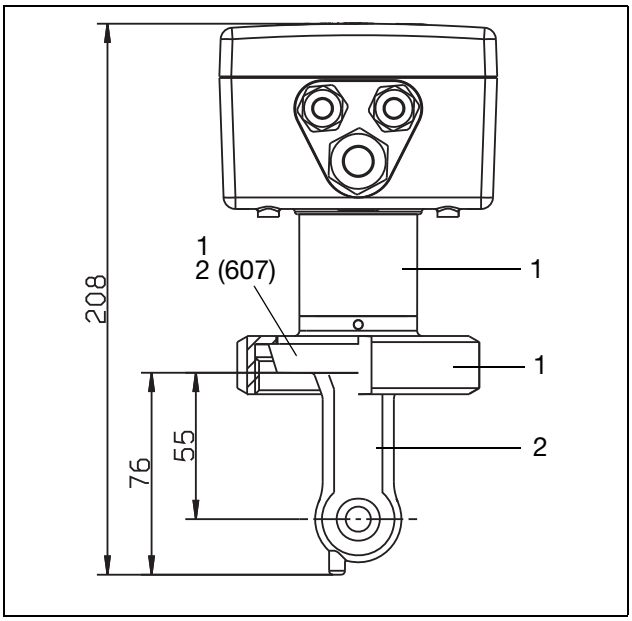

Version with process connection
607 = MK DN 50
608 = MK DN 65
609 = MK DN 80
and extra code 767

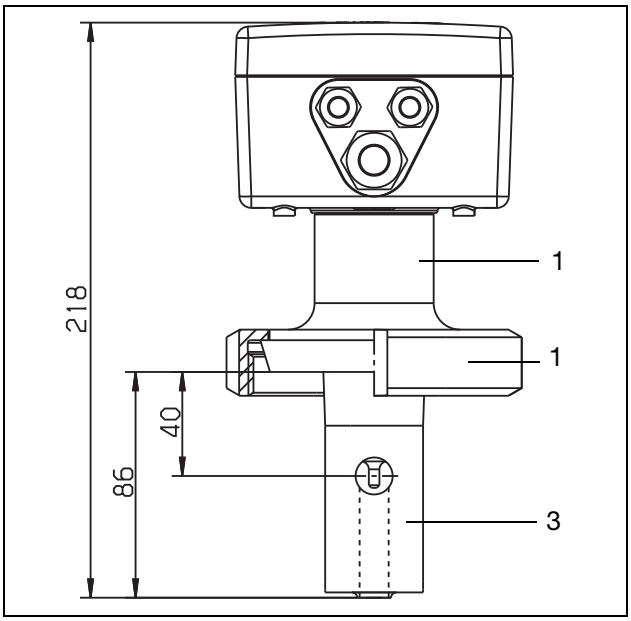

Version with process connection
606 = MK DN 40
607 = MK DN 50
608 = MK DN 65
609 = MK DN 80
and extra code 768

1 = stainless steel 1.4301 2 = PEEK 3 = PVDF

6 Installation

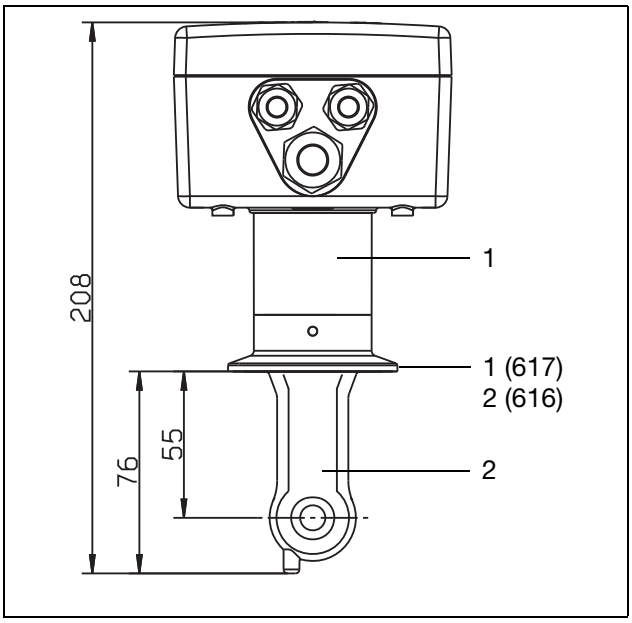

Version with process connection
616 = Clamp 2"
617 = Clamp 2 1/2"
and extra code 767 and 941
(retaining clip not included in delivery)

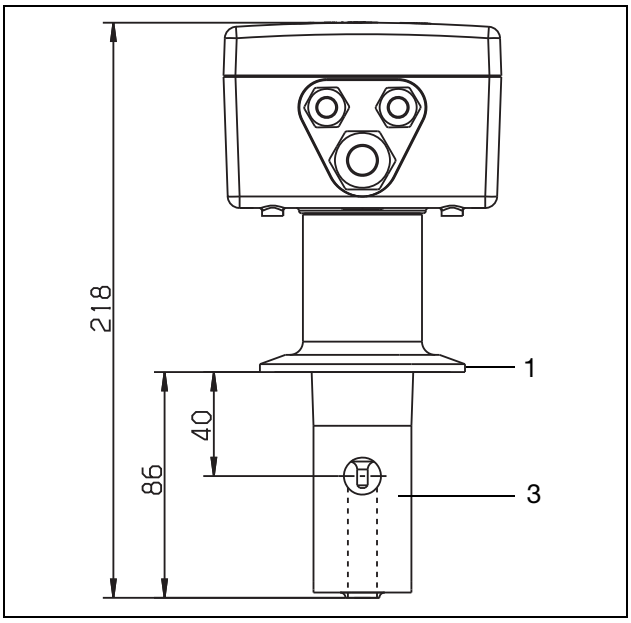

Version with process connection
617 = Clamp 2 1/2"
and extra code 768
(retaining clip not included in delivery)

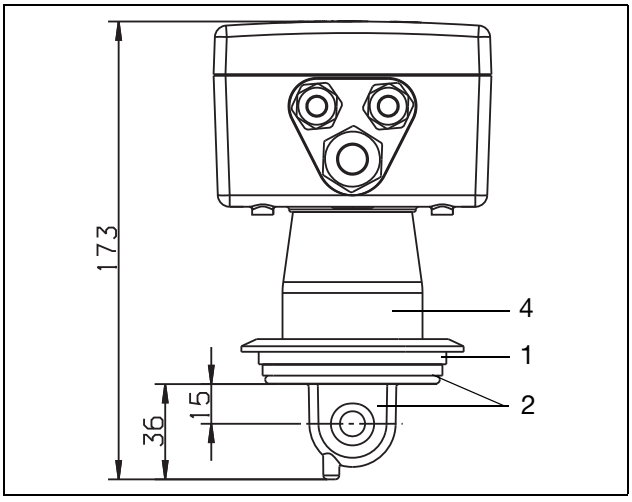

Version with process connection
686 = VARIVENT® DN 40/50
and extra code 767 and 941
(retaining clip not included in delivery)

1 = stainless steel 1.4301 2 = PEEK 3 = PVDF 4 = PPS GF 40

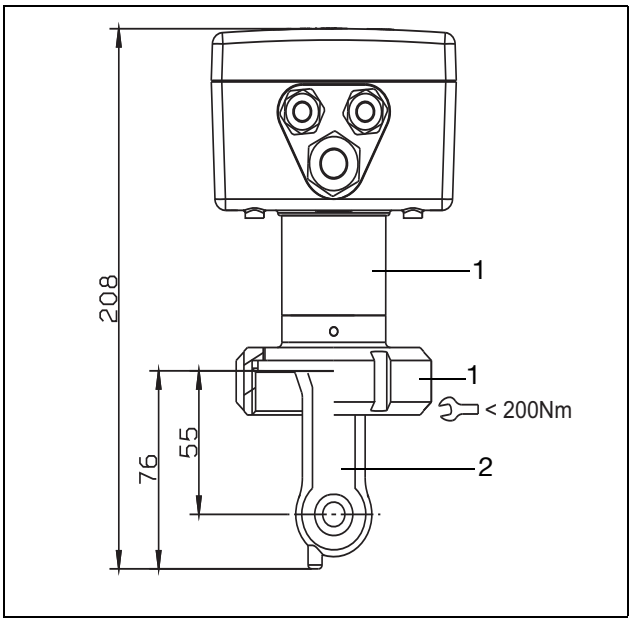

Version with process connection
690 = SMS 2"
and extra code 767 and 941

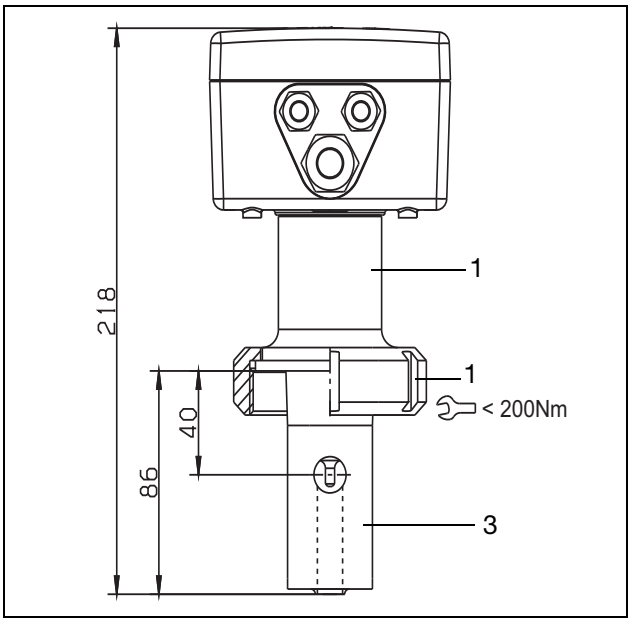

Version with process connection
690 = SMS 2"
and extra code 768

1 = stainless steel 1.4301 2 = PEEK 3 = PVDF

6 Installation

6.3 Device with separate sensor

6.3.1 Operating device

Transmitter with a separate sensor, in a plastic casing
with basic type extensions 26 or 66 and electrical connection 83

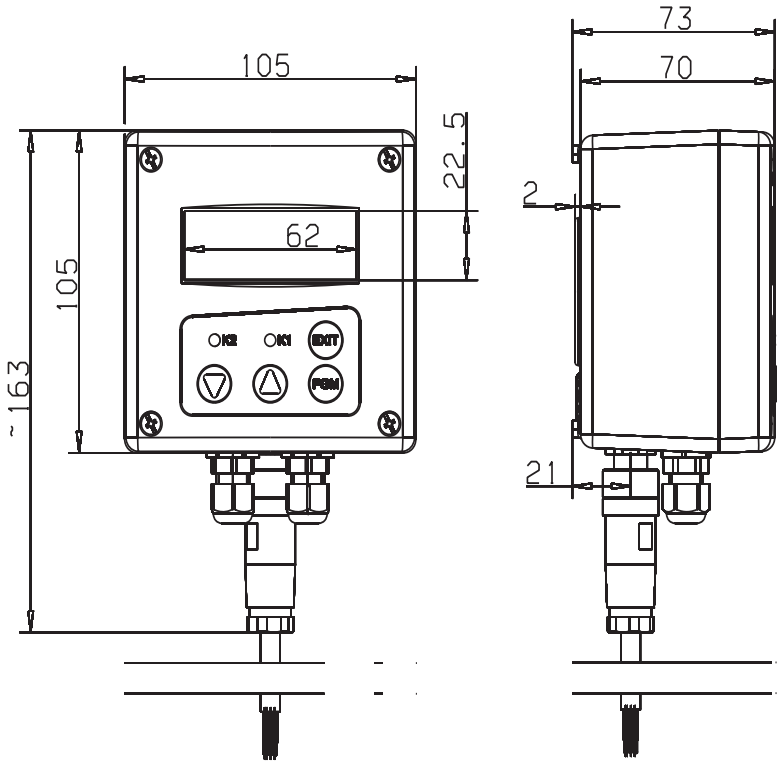

6.3.2 Drilling template for wall mounting

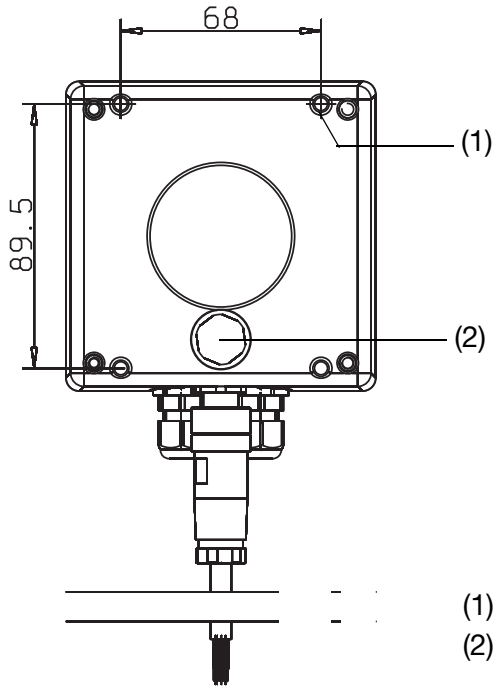

(1) Knock-through plugs (×4)
(2) Venting element, PBT

6.3.3 Process connections

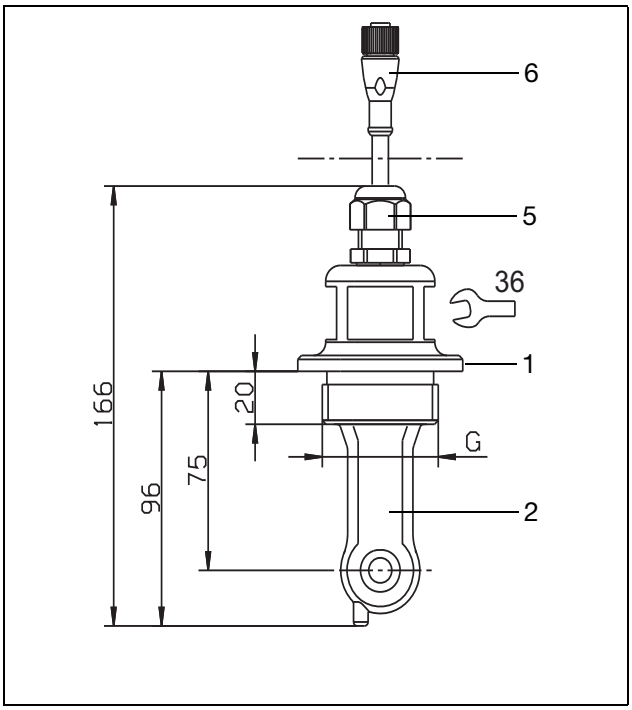

Version with process connection
108 = screw-in thread G 1 1/2 A
110 = screw-in thread G 2 A
and extra code 767

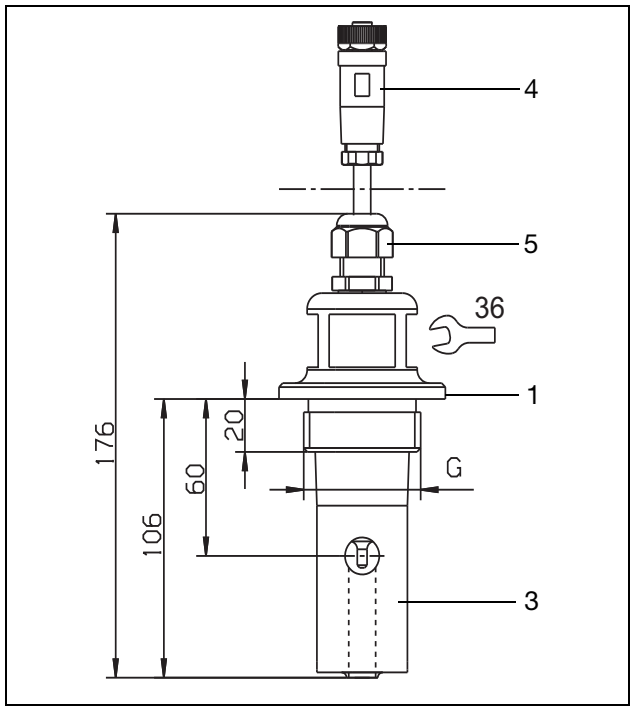

Version with process connection
107 = screw-in thread G 1 1/4 A
108 = screw-in thread G 1 1/2 A
110 = screw-in thread G 2 A
and extra code 768

1 = stainless steel 1.4301 2 = PEEK 3 = PVDF 4 = PBT 5 = PA 6 = TPU

6 Installation

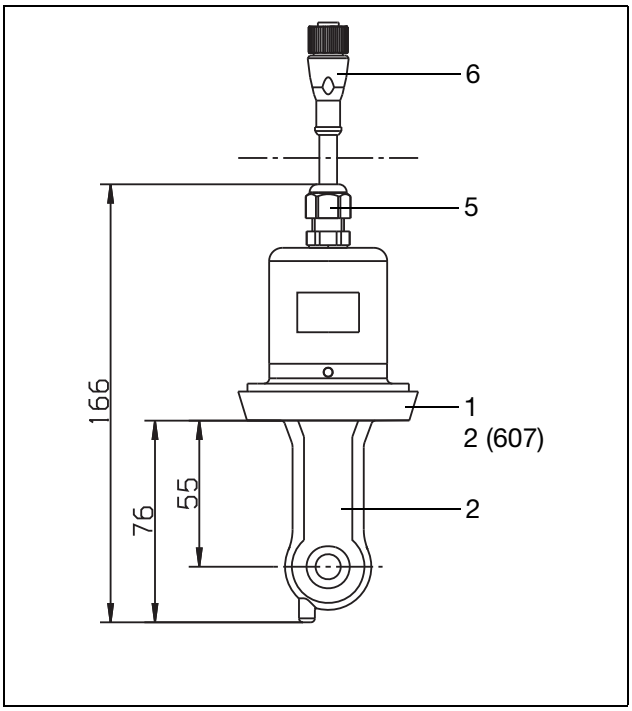

Split version with process connection
607 = MK DN 50
608 = MK DN 65
609 = MK DN 80
and extra code 767
(retaining clip not included in delivery)

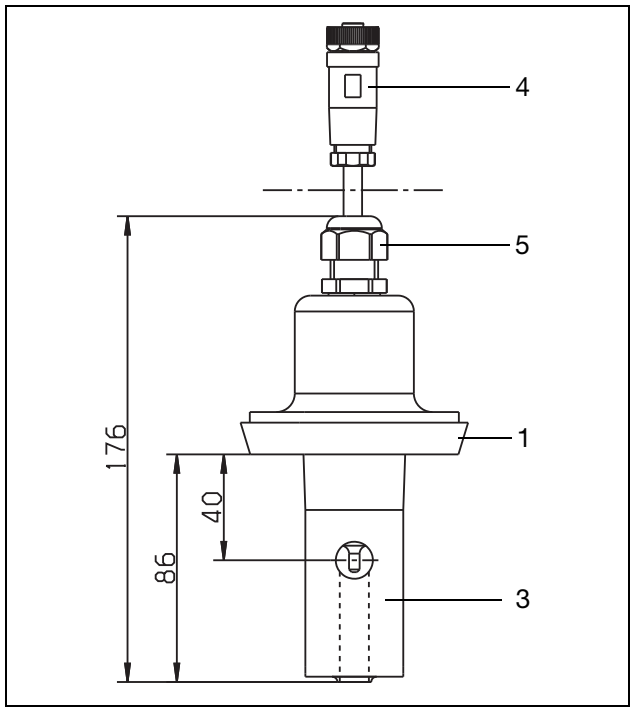

Split version with process connection
606 = MK DN40
607 = MK DN50
608 = MK DN65
609 = MK DN80
and extra code 768
(retaining clip not included in delivery)

1 = stainless steel 1.4301 2 = PEEK 3 = PVDF 4 = PBT 5 = PA 6 = TPU

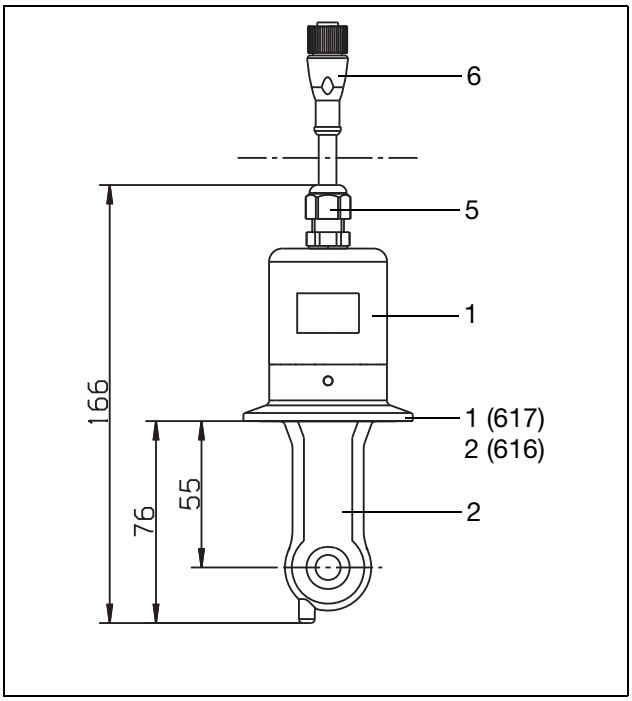

Split version with process connection
616 = Clamp 2"
617 = Clamp 2 1/2"
and extra code 767
(retaining clip not included in delivery)

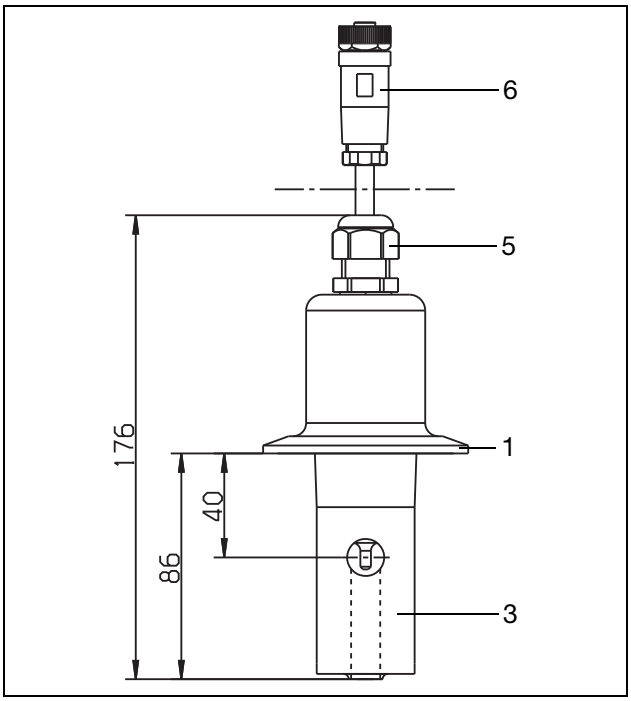

Split version with process connection
617 = Clamp 2 1/2"
and extra code 768
(retaining clip not included in delivery)

1 = stainless steel 1.4301 2 = PEEK 3 = PVDF 4 = PBT 5 = PA 6 = TPU

6 Installation

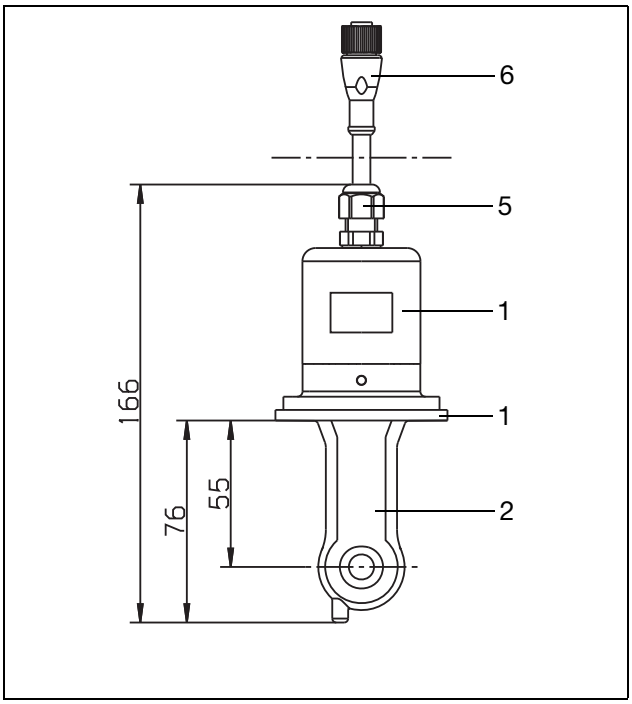

Split version with process connection
690 = SMS 2"
and extra code 767
(retaining clip (< 200Nm) not included in delivery)

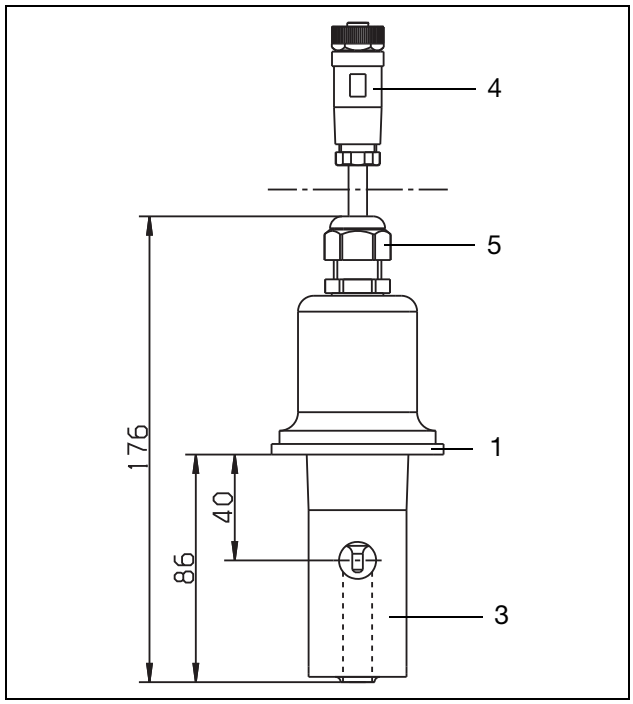

Split version with process connection
690 = SMS 2"
and extra code 768
(retaining clip (< 200Nm) not included in delivery)

Varivent®

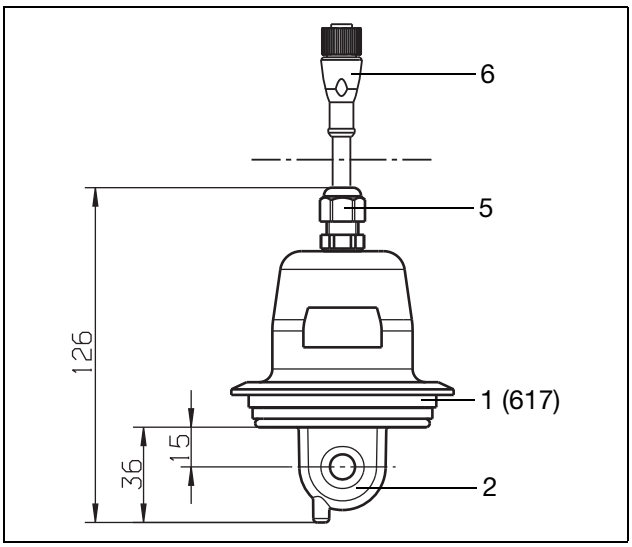

Split version with process connection
686 = VARIVENT® DN 40/50
and extra code 767 and 941
(retaining clip not included in delivery)

1 = stainless steel 1.4301 2 = PEEK 3 = PVDF 4 = PBT 5 = PA 6 = TPU

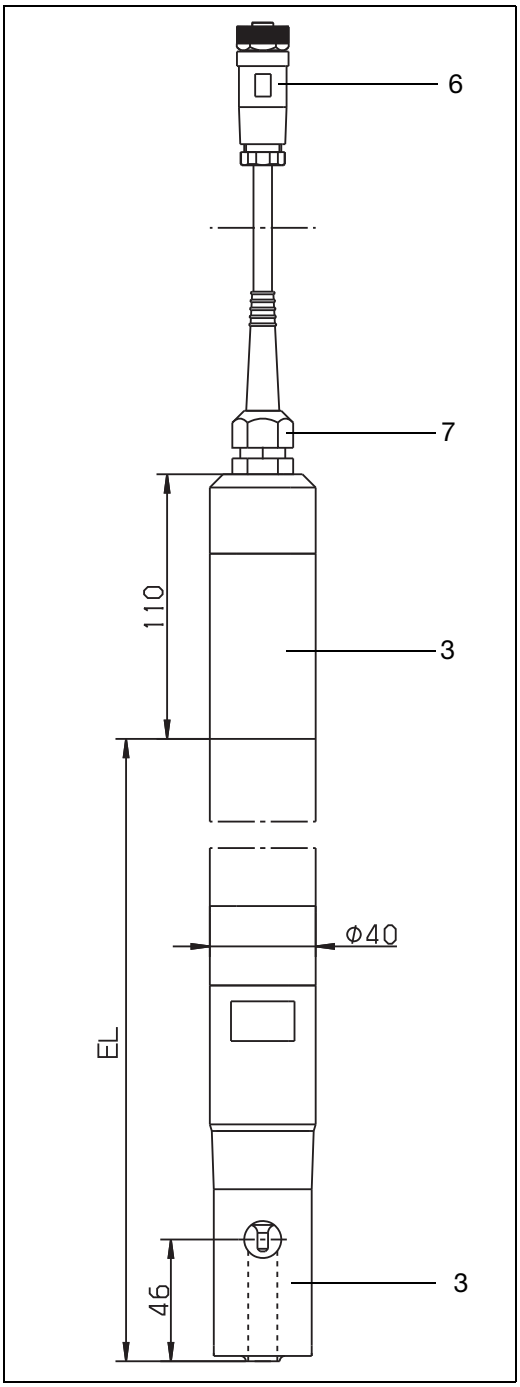

Split version
with process connection 706
immersion model
(pipe clips included in delivery)

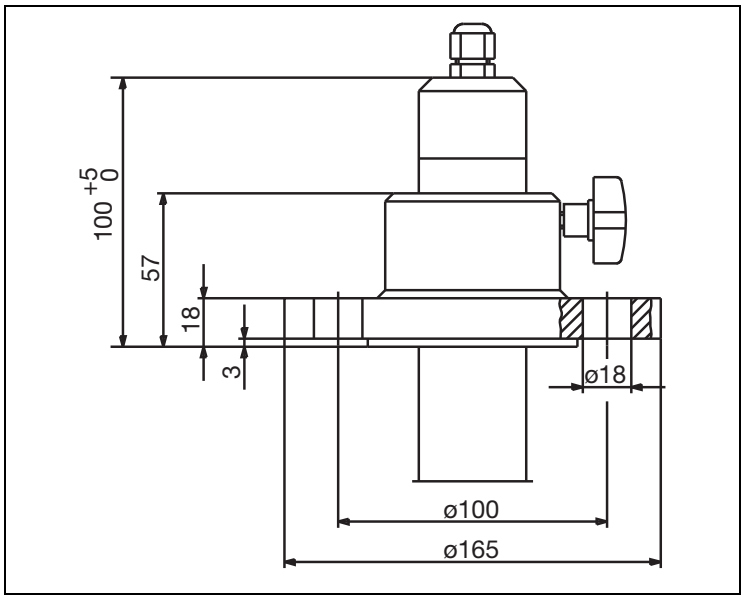

Optional accessory
DN 32 Flange
Part no. 00083375

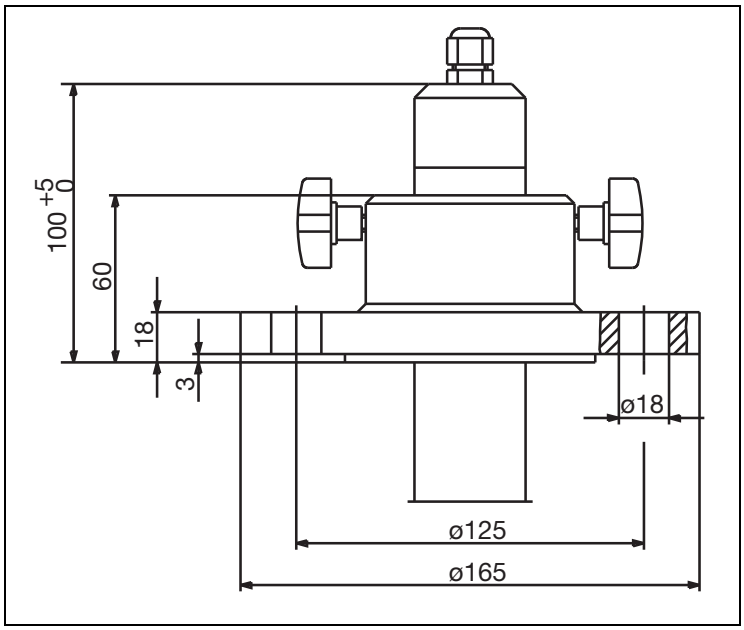

Optional accessory
DN 50 Flange
Part no. 00083376

3 = PVDF 6 = PBT 7 = brass nickel plated EPDM

6 Installation

6.4 Mounting examples

Threaded pipe adapter

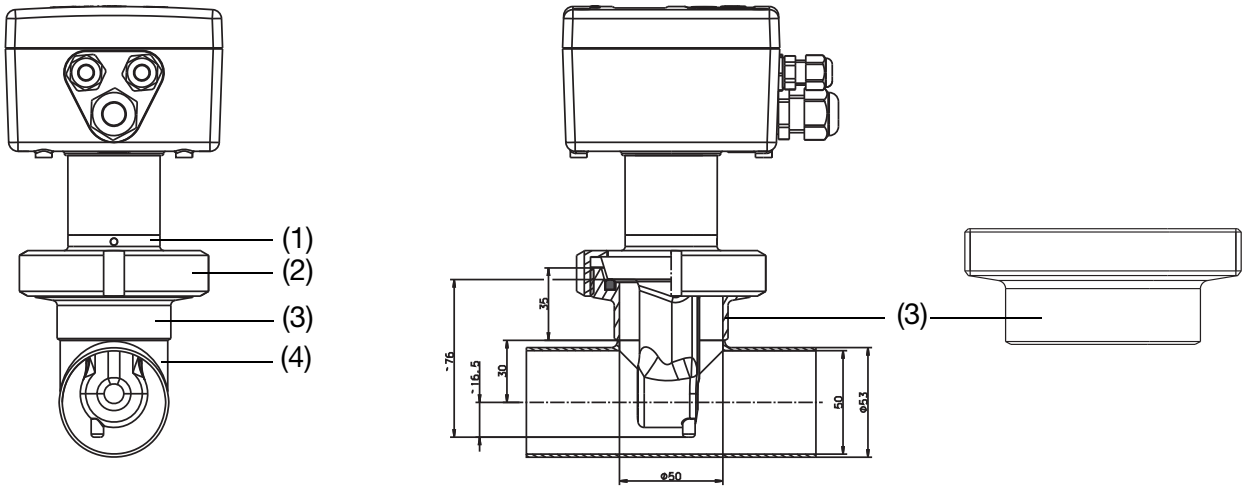

(1) Process connection 607, screwed pipe fitting DN 50, DIN 11851 (MK DN 50, milk cone), PEEK

(2) Ring nut DN 50, 1.4301

(3) Weld-on threaded pipe adaptor DN 50, DIN 11851, 1.4404
(matching part for process connection 607)

(4) Tee DIN 11852, short, DN50, 1.4301
(to be provided by the plant operator; **not** supplied by the device manufacturer)

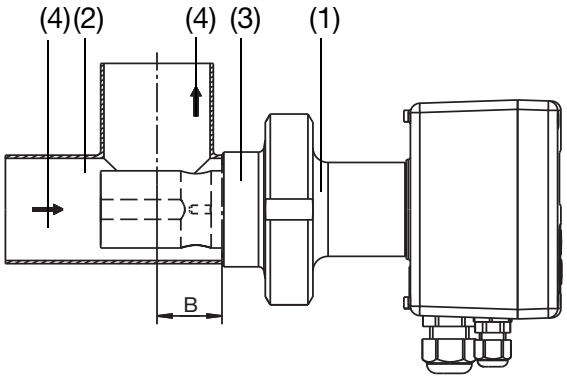

(1) Process connection 607, screwed pipe fitting DN 50, DIN 11851 (MK DN 50, milk cone), 1.4301

(2) Tee DIN 11852, SSS DN50, 1.4301, Dim. B shortened to 30 mm
(to be provided by the plant operator; **not** supplied by the device manufacturer)

(3) Weld-on threaded pipe adaptor DN 50, DIN 11851, 1.4301
(matching part for process connection 607)

(4) Flow direction

Clamp

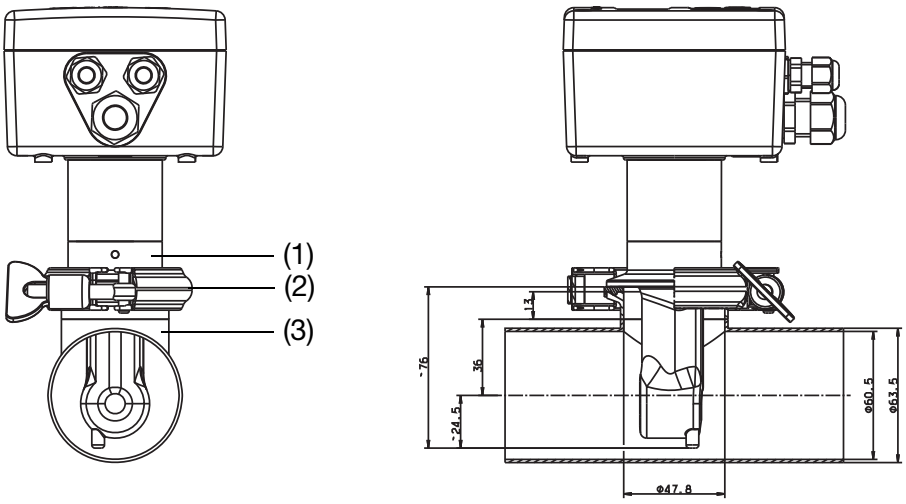

(1) Process connection 617, Clamp 2 1/2", PEEK

(2) Clamping ring, 1.4301,

(3) Tee, short, 2.5" - 2" similar to DIN 11852, and 2" clamp adapter, 1.430
(to be provided by the plant operator; **not** supplied by the device manufacturer)

Varivent®

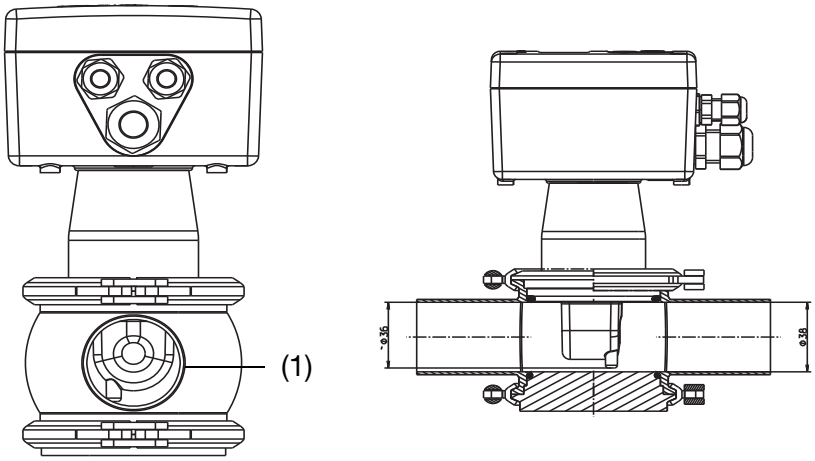

(1) Tee, VARIVENT®, DN 50, 1.4404
(to be provided by the plant operator; **not** supplied by the device manufacturer)

6.4.1 Pipe-mounting kit

NOTE!

The pipe-mounting kit is also suitable for horizontal pipes.

for type 202756, part no. 00515128

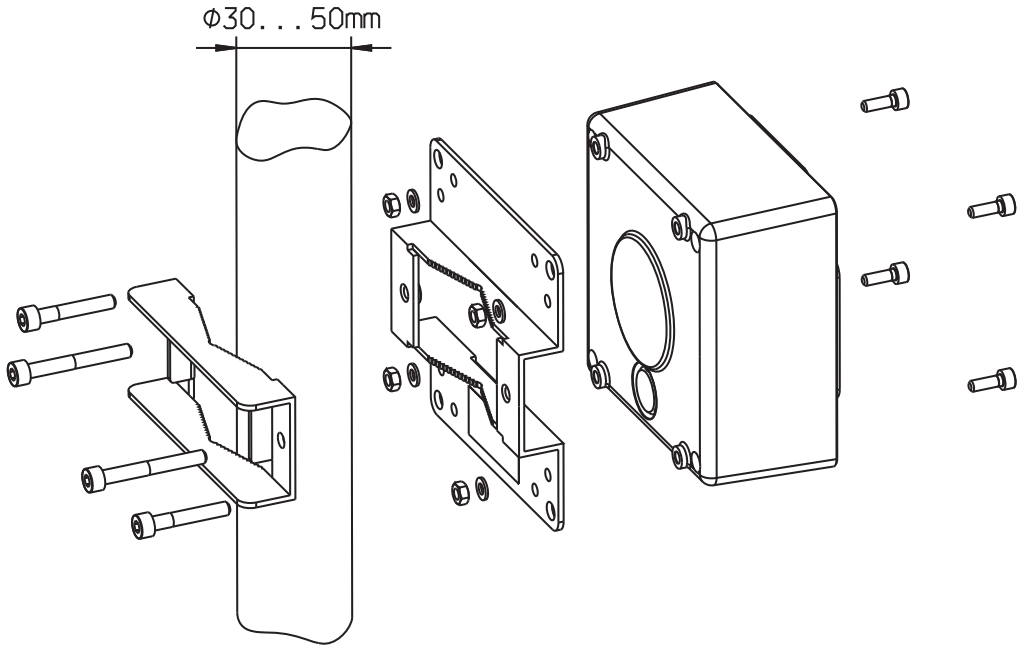

for type 202756, part no. 00515128

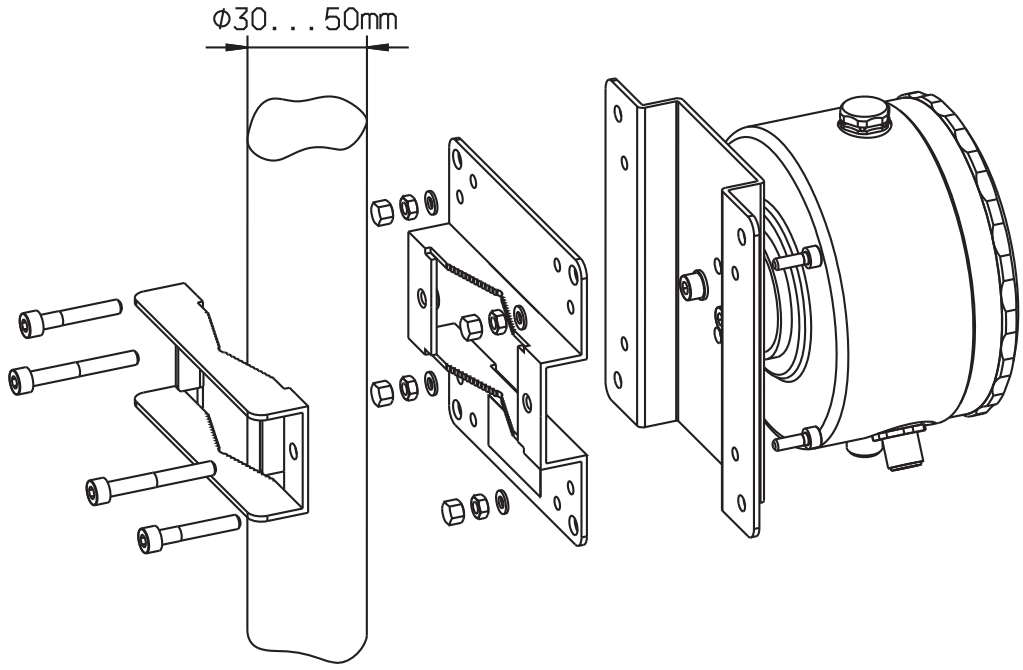



ATTENTION!

The electrical connection must only be carried out by properly qualified personnel!

- The choice of cable, the installation and the electrical connection must conform to the requirements of VDE 0100 “Regulations on the Installation of Power Circuits with Nominal Voltages below 1000 V” or the appropriate local regulations.
- The electrical connection must only be carried out by qualified personnel.
- If contact with live parts is possible while working on the device, it must be completely disconnected from the electrical supply.
- The electromagnetic compatibility conforms to EN 61 326.
- Run input, output and supply cables separately and not parallel to one another.
- The device is not suitable for use in areas with an explosion hazard (Ex areas).
- Apart from faulty installation, incorrect settings on the device may also affect the proper functioning of the subsequent process or lead to damage.

7 Installation

7.1 General

Opening the operating unit

ATTENTION!
It is only necessary to open the housing for devices with cable glands.
Devices with M12 plug/socket connectors should not be opened!

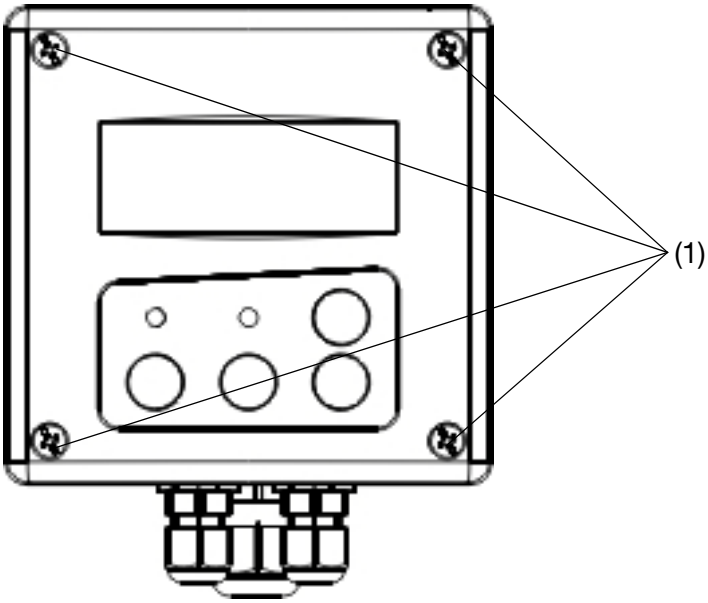

✱ Remove four screws (1) and take off the cover

Connecting up the cables

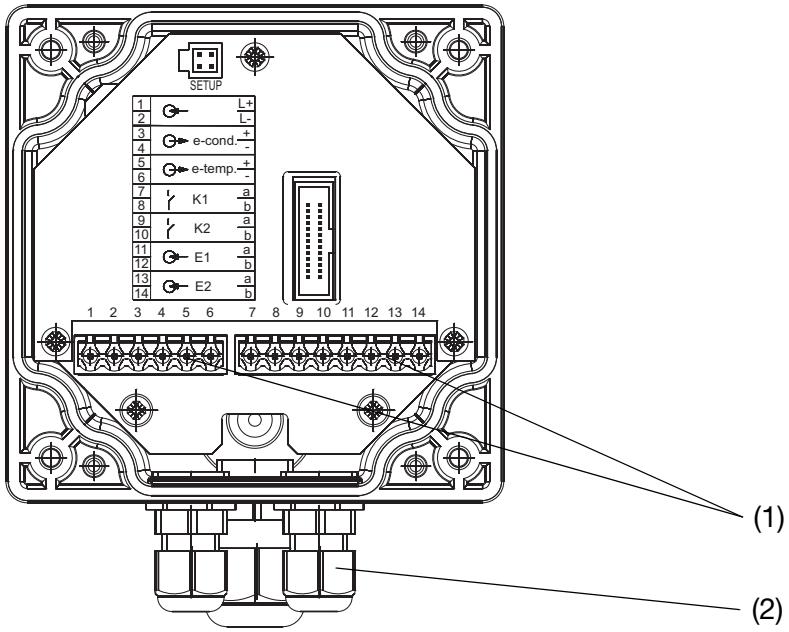

ATTENTION!

To connect the single conductors, pull off the pluggable screw terminals (1) in the operating unit.

Pass the connecting cables through the cable glands (2).

Wiring

DANGER!

For devices with a separate sensor, the transmitter and detached sensor are matched to one another at the factory!
When connecting the components, please note that the serial number of the external sensor (marked on the label attached to the connecting cable) must match the serial number marked on the nameplate of the transmitter!

7.2 Electrical connection

7.2.1 Transmitter with electrical connection 82 (cable glands)

Head transmitter

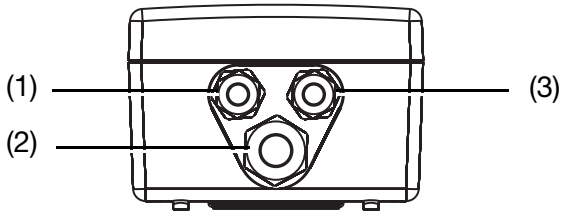

(1) Power supply and actual value output (conductivity/concentration and temperature)
M12 cable gland (PA)

(2) Switching outputs
M16 cable gland (PA)

(3) Binary input
M12 cable gland (PA)

7 Installation

Transmitter with separate sensor

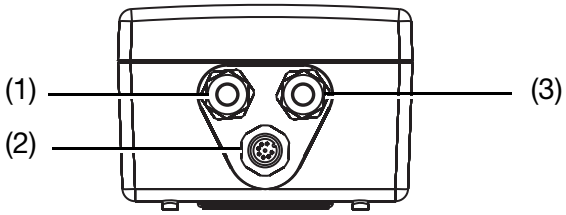

(1) Power supply and actual value output
(conductivity/concentration and temperature)
M12 cable gland (PA)

(2) Separate sensor
M12 flush-type connector

(3) Binary input and switching outputs
M12 cable gland (PA)

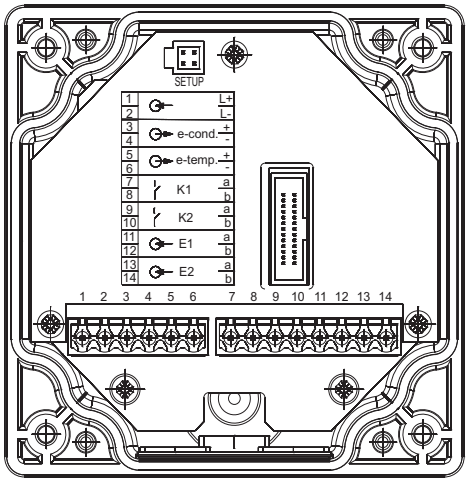

	Terminal assignment		Symbol
Supply			
Supply (with reverse-polarity protection)	1 2	L + L-	

Outputs			
Analog signal output: conductivity/concentration (electrically isolated)	3 4	+ -	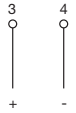
Analog signal output: temperature (electrically isolated)	5 6	+ -	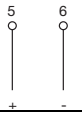

	Terminal assignment		Symbol
PhotoMOS® relay K1 (floating, no)	7 8		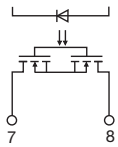
PhotoMOS® relay K2 (floating, no)	9 10		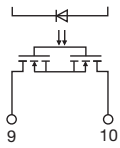

Binary inputs			
Binary input E1	11 12		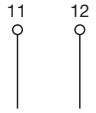
Binary input E2	13 14		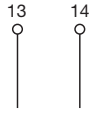

7.2.2 Transmitter with electrical connection 83 (M12 plug-and-socket connection)

Head transmitter

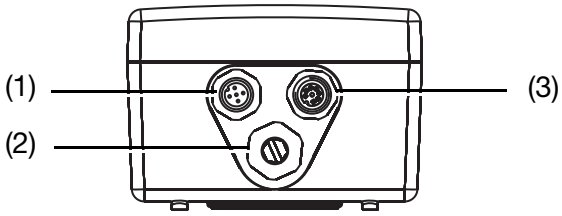

(1) **Connector I**
Power supply and actual value output for conductivity/concentration
M12 flush-type connector, 5-pin

(2) Blanking plug

(3) **Connector II**
Actual value output for temperature, and binary input and switching outputs
M12 flush-type connector, 8-pin

7 Installation

Transmitter with separate sensor

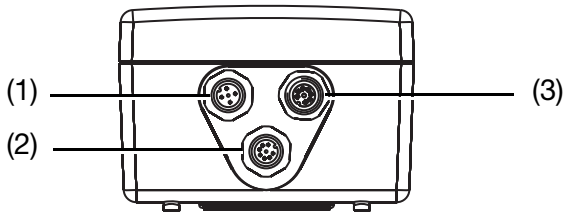

(1) **Connector I**
Power supply and actual value output for conductivity/concentration
M12 flush-type connector, 5-pin

(2) **Connector III**
Inductive conductivity sensor
M12 flush-type connector, 8-pin

(3) **Connector II**
Actual value output for temperature, and binary input and switching outputs
M12 flush-type connector, 8-pin

ATTENTION!

In devices with a separate sensor and M12 plug / socket connectors, the screw terminals in the device are painted over.
Removing this paint voids the warranty!

Supply	Connector	Assignment	Symbol
Supply (with reverse-polarity protection)	I	L + L-	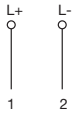

Outputs			
Analog signal output: conductivity/concentration (electrically isolated)	I		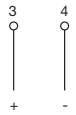
Analog signal output: temperature (electrically isolated)	II		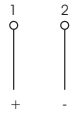
PhotoMOS® relay K1 (floating, no)	II		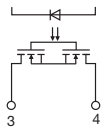
PhotoMOS® relay K2 (floating, no)	II		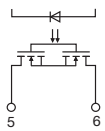

Binary inputs			
Binary input E1	I II		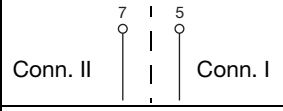
Binary input E2	I II		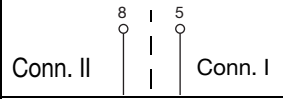



DANGER!

A steel piping must be connected with functional earth (EN 60445)!

8 Setup program

8.1 Function

Configurable parameters

The setup program, which is available as an option, can be used for easy adaptation of the transmitter to specific requirements.

- Setting the measurement range and the range limits.
- Setting the response of the output to an out-of-range signal.
- Setting the functions of the switched outputs K1 and K2.
- Setting the functions of the binary inputs E1 and E2.
- Setting up special functions (e.g. the dilution function).
- Setting up a customer-specific characteristic, etc.

NOTE!

Data transmission from or to the transmitter can only take place when it is connected to the electrical supply, see Chapter 7 “Installation”, page 33ff.

Connection

CAUTION!

The setup interface is not electrically isolated. When connecting the PC interface cable, it is therefore absolutely essential to ensure that either the supply of the transmitter or of the PC is **not** electrically earthed (for instance, use a battery-powered notebook).

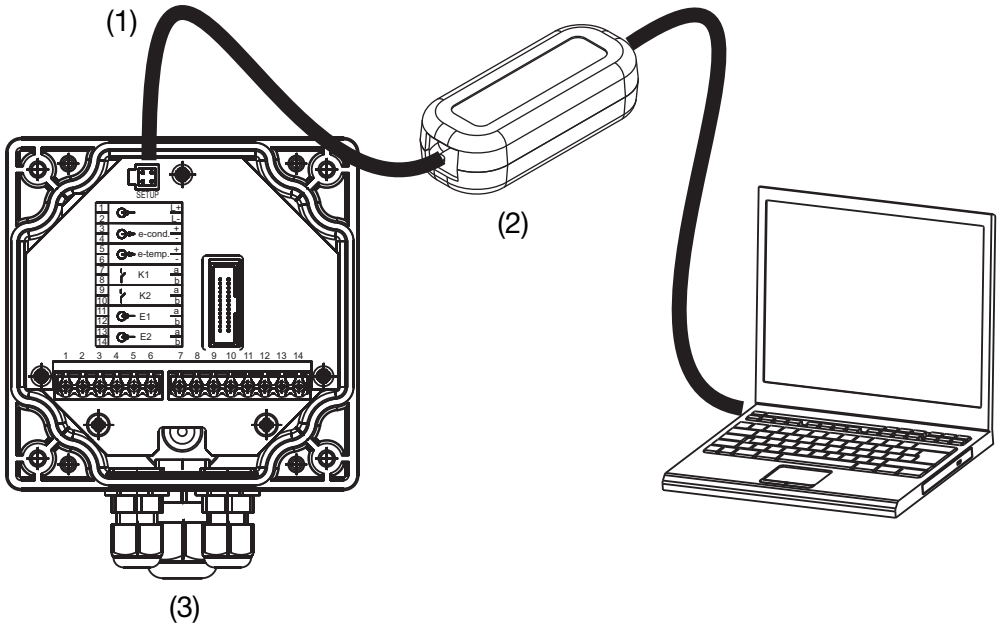

(1) Plug-on adapter (included in Setup-Set)
(2) PC interface cable with USB, part no. 00456352
(3) Supply



CAUTION!

The transmitter has been tested in the factory for fault-free functioning, and is delivered ready for operation.

9.1 Head-mounted transmitter or transmitter with separate sensor

- Mounting the device, see “Installation”, page 19.
- Connecting the device, see “Installation”, page 33.



DANGER!

For devices with a separate sensor, the transmitter and detached sensor are matched to one another at the factory!
When connecting the components, please note that the serial number of the external sensor (marked on the label attached to the connecting cable) must match the serial number marked on the nameplate of the transmitter!

9.2 Replacement sensor

- Connect up the sensor as described in the operating instructions for the replacement sensor.
- Calibrate the sensor as described in the operating instructions for the replacement sensor.

10 Operation

10.1 Controls

Device without LC display

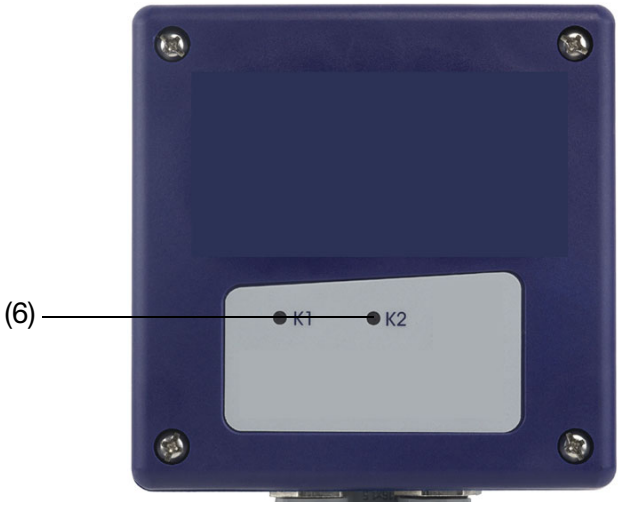

Device with LC display



(1) Grafik LC display, back-lit

(2) PGM key, confirm entries/select menu

(3) EXIT key, cancel entry without saving/cancel calibration go back one menu level

(4) ▲ key, increase value/step on in selection

(5) ▼ key, reduce value/step on in selection

(6) LEDs K1 and K2 show the states of the switched outputs.
In normal operation, the LED lights up if the corresponding output is active.
If the pulse function is active, the LED only indicates the status.

The K1 LED blinks during calibration.
In fault condition, the LED K1 and LED K2 blink.

LC display

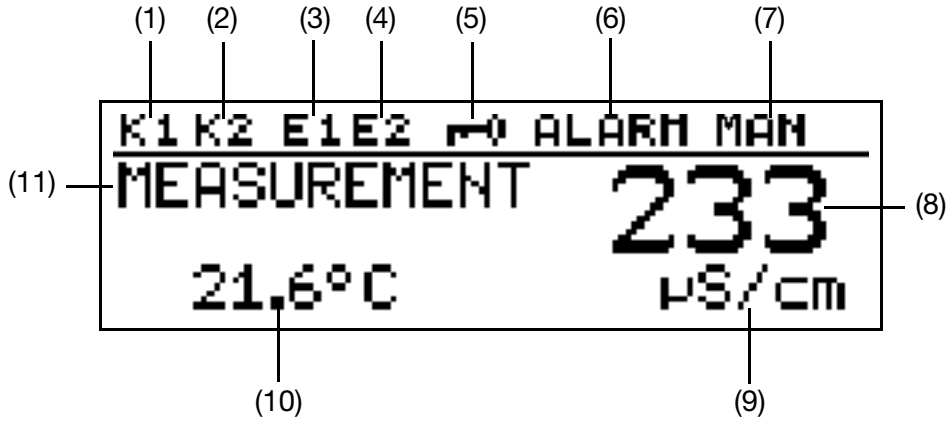

(1) Output K1 is activ
(2) Output K2 is activ
(3) Binary input 1 is activated
(4) Binary input 2 is activated
(5) Keypad is inhibited
(6) Device status (indications)
- Alarm (e.g. overrange)
- Calib blinking (calibration timer has run down)
- Calib (customer calibration is active)

(7) Output mode
- Hand (manual operation)
- Hold (hold operation)

(8) Conductivity/concentration measurement
(9) Unit for conductivity/concentration measurement
(10) Temperature of the medium
(11) Device status e.g.
- Measurement (normal)
- Dilution (dilution function)
- Dosing (dilution function)
- Inhibited (dilution function)
- Calibration status

10 Operation

10.2 Principle of operation

10.2.1 Operation in levels

Measurement mode, see Chapter 10.4 "Principle of operation" page 39

OPERATOR LEVEL, see chapter 10.5 "Operator level", page 39.

INPUT CONDUCTIVITY	MEASUREMENT RANGE 1...4
	TEMPERATURE COMPENSATION
	TEMP. COEFFICIENT 1...4
	REFERENCE TEMPERATURE
	REL. CELL CONSTANT
	MOUNTING FACTOR
	CONCENTR. MEASUREMENT
	CONCENTR. RANGE
	OFFSET
	FILTER TIME
	CALIBR. INTERVAL
OUTPUT CONDUCTIVITY	SIGNAL TYPE
	SCALING START 1...4
	SCALING END 1...4
	IN CASE OF ALARM
	DURING CALIBRATION
	SAFETY VALUE
	MANUAL OPERATION
	MANUAL VALUE
INPUT TEMPERATURE	UNIT
	MEAS. VALUE ACQUISITION
	MANUAL SPECIFICATION
	OFFSET
	FILTER TIME
OUTPUT TEMPERATURE	SIGNAL TYPE
	SCALING START
	SCALING END
	IN CASE OF ALARM
	DURING CALIBRATION
	SAFETY VALUE
	MANUAL OPERATION
	MANUAL VALUE
OUTPUT BINARY 1	FUNCTION
	LIMIT VALUE
	HYSTERESIS
	DISTANCE
	MANUAL OPERATION
	DURING HOLD
	IN CASE OF ALARM / CALIBR.
	SWITCH-ON DELAY
	SWITCH-OFF DELAY
	PULSE DURATION
OUTPUT BINARY 2	FUNCTION
	LIMIT VALUE
	HYSTERESIS
	DISTANCE
	MANUAL OPERATION
	DURING HOLD
	IN CASE OF ALARM / CALIBR.
	SWITCH-ON DELAY
	SWITCH-OFF DELAY
	PULSE DURATION
INPUT BINARY 1	FUNCTION
INPUT BINARY 2	FUNCTION
DILUTION	REDUCTION
	DOSING TIME
	LOCK TIME

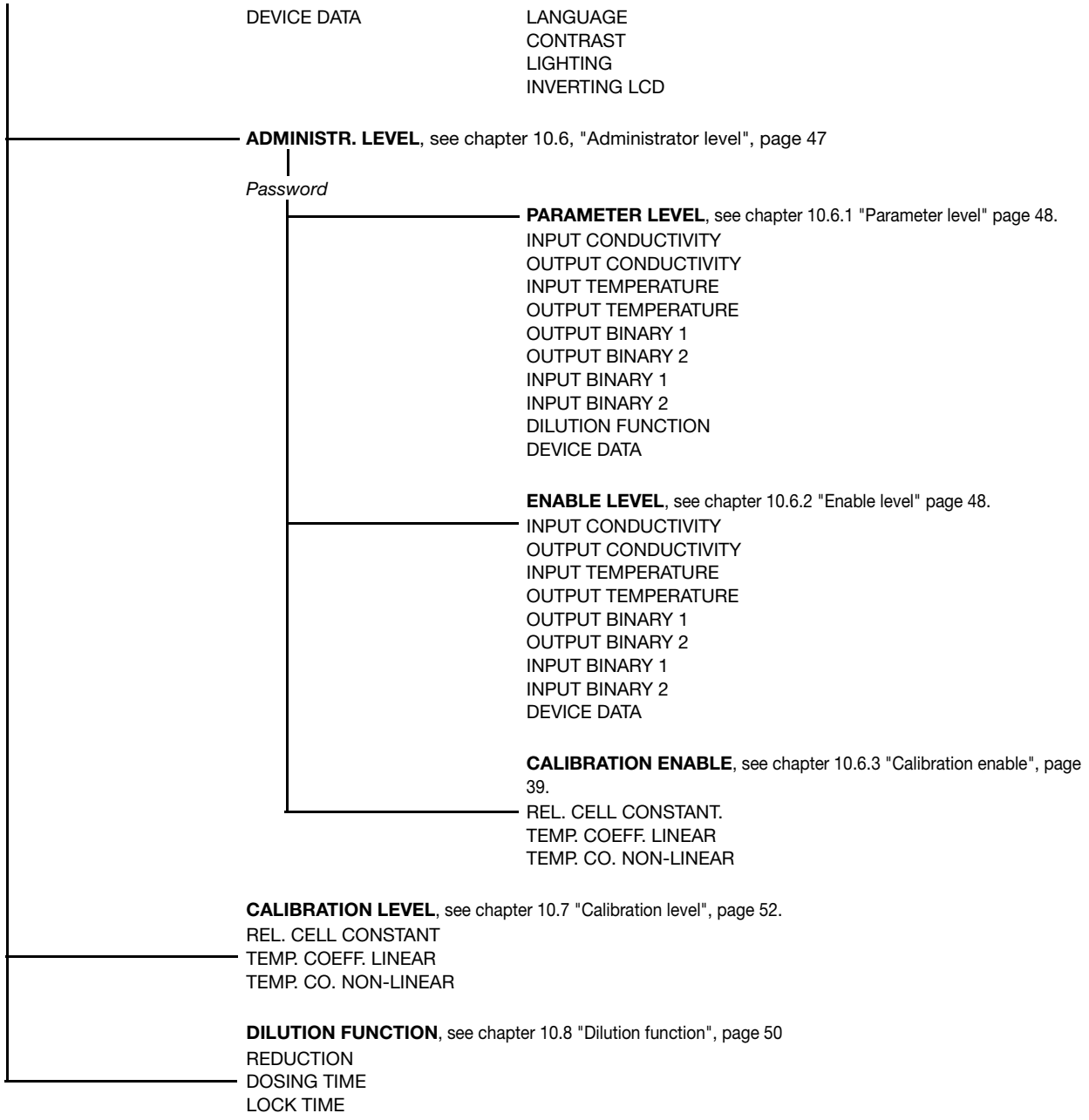
DEVICE DATA
LANGUAGE
CONTRAST
LIGHTING
INVERTING LCD
ADMINISTR. LEVEL, see chapter 10.6, "Administrator level", page 47
Password
PARAMETER LEVEL, see chapter 10.6.1 "Parameter level" page 48.
INPUT CONDUCTIVITY
OUTPUT CONDUCTIVITY
INPUT TEMPERATURE
OUTPUT TEMPERATURE
OUTPUT BINARY 1
OUTPUT BINARY 2
INPUT BINARY 1
INPUT BINARY 2
DILUTION FUNCTION
DEVICE DATA
ENABLE LEVEL, see chapter 10.6.2 "Enable level" page 48.
INPUT CONDUCTIVITY
OUTPUT CONDUCTIVITY
INPUT TEMPERATURE
OUTPUT TEMPERATURE
OUTPUT BINARY 1
OUTPUT BINARY 2
INPUT BINARY 1
INPUT BINARY 2
DEVICE DATA
CALIBRATION ENABLE, see chapter 10.6.3 "Calibration enable", page 39.
REL. CELL CONSTANT.
TEMP. COEFF. LINEAR
TEMP. CO. NON-LINEAR
CALIBRATION LEVEL, see chapter 10.7 "Calibration level", page 52.
REL. CELL CONSTANT
TEMP. COEFF. LINEAR
TEMP. CO. NON-LINEAR
DILUTION FUNCTION, see chapter 10.8 "Dilution function", page 50
REDUCTION
DOSING TIME
LOCK TIME

10.3 Principle of operation

Operation in levels

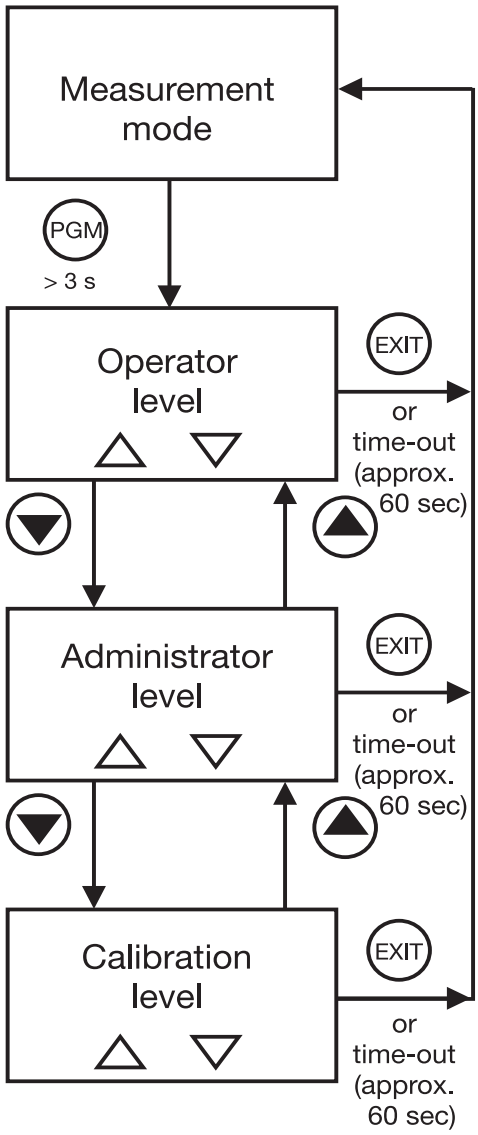

10.4 Measurement mode

Representation

In measurement mode, the conductivity is shown (compensated for the reference temperature) or the concentration and temperature of the medium being measured.

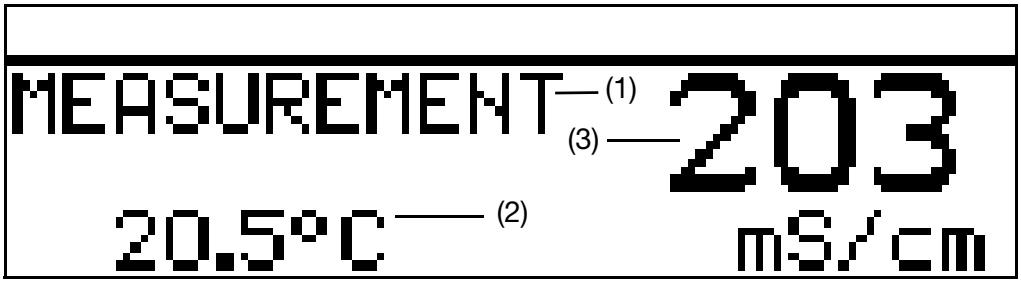

(1) MEASUREMENT -> Measurement mode

(2) 20.5°C -> Temperature of the sample medium

(3) 203 mS/cm -> Conductivity of the medium (compensated for the reference/comparison temperature – usually 25°C)

10.5 Operator level

All the parameters that have been enabled by the administrator (administrator level) can be edited in this level. All other parameters (marked by a key) can only be read.

✱ Press the PGM key for at least 3 seconds.

✱ Select OPERATOR LEVEL.

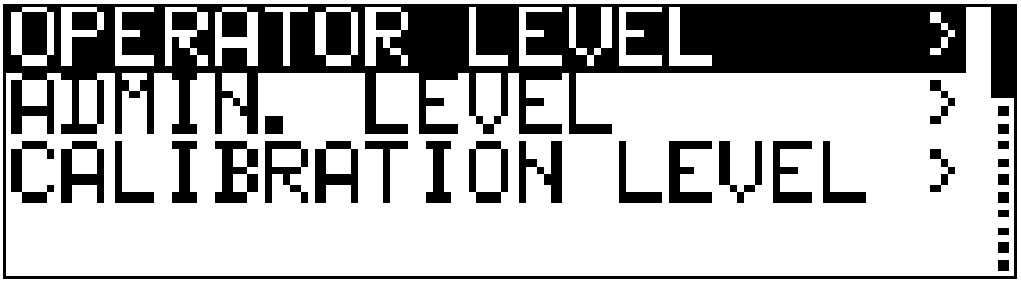

10.5.1 CONDUCTIVITY IN (conductivity input)

RANGE 1 — 4 [1]

0 — 500 µS/cm
0 — 1000 µS/cm
0 — 2000 µS/cm
0 — 5000 µS/cm
0 — 10 mS/cm
0 — 20 mS/cm
0 — 50 mS/cm
0 — 100 mS/cm
0 — 200 mS/cm
0 — 500 mS/cm
0 — 1000 mS/cm
0 — 2000 mS/cm UNC[2]

[1] Measurement ranges 2, 3 and 4 are only used if BINARY INPUT is configured to RANGE/TEMPCO.
[2] This measurement range is not temperature-compensated.

TEMP. COMPENSATION

LINEAR
NON-LINEAR (see "Non-linear temperature coefficient (ALPHA)", page 67)
NATURAL WATER (permissible temperature range 0 to 36 °C as per EN 27 888)

TEMP. COEFFICIENT 1 — 4 [1]

0 — **2.20** — 5.5 %

[1] Ranges 2, 3 and 4 are only used if BINARY INPUT is configured to RANGE/TEMPCO.

REFERENCE TEMP.

15.0 to **25.0** to 30 °C

CELL CONSTANT

2.00 to **6.80** to 10.0 1/cm

A check or alteration is only necessary, if a replacement sensor (basic type extension 80) has been connected to the transmitter with separate sensor. The cell constant is printed on the replacement sensor (K = x,xx).

REL. CELL CONSTANT

80.0 — **100.0** — 120 %

MOUNTING FACTOR

80.0 — **100.0** — 120 %

If it is not possible to achieve the minimum clearance of 20 mm between the sensor and the outer wall, then a limited compensation can be made through this parameter.

CONC. MEAS. TYPE

NO FUNCTION

NaOH

HNO3

CUSTOMIZED (values can only be entered by using the optional setup program)

CONC. MEAS. RANGE

For HNO_3

0 — 25 % BY WEIGHT
36 — 82 % BY WEIGHT

For NaOH

0 — 15 % BY WEIGHT
25 — 50 % BY WEIGHT

OFFSET

-100 to **0** to +100 mS/cm (±10 % of range)

FILTER TIME

00:00:00 — **00:00:01** — 00:00:25 H:M:S

CALIB. INTERVAL

0— 999 DAYS (0 = switched off)

10.5.2 **CONDUCTIVITY OUT** (conductivity output)

SIGNAL TYPE

0 — 20 mA
4 — 20 mA
20 — 0 mA
20 — 4 mA
0 — 10 V
2 — 10 V
10 — 0 V
10 — 2 V

SCALING START 1 — 4[1]

0 µS/cm = 4 mA

Can be set in the range being used, depending on the signal type.

[1] Ranges 2, 3 and 4 are only used if BINARY INPUT is configured to RANGE/TEMPCO.

SCALING END 1 — 4[1]

1000 µS/cm = 20 mA

Can be set in the range being used, depending on the signal type.

[1] Ranges 2, 3 and 4 are only used if BINARY INPUT is configured to RANGE/TEMPCO.

DURING ALARM

LOW (0 mA/0 V/3.4 mA/1.4 V)
HIGH (22 mA/10.7 V)
SAFE VALUE (depending on the signal type)

DURING CALIBRATION

MOVING
FROZEN
SAFE VALUE

SAFE VALUE

0.0 — **4.0** — 22.0 mA (depending on the signal type)
0 — 10.7 V

MANUAL MODE

OFF
ON

MAN. VALUE

0.0 — **4.0** — 22.0 mA (depending on the signal type)
0 — 10.7 V

10.5.3 TEMPERATURE IN

DIMENS. UNIT

°C
°F

MEAS. MODE

SENSOR
MANUAL

MANUAL VALUE

-20.0 to **25.0** to 150 °C

OFFSET

-15.0 to **0.0** to 15.0 °C

FILTER TIME

00:00:00 — **00:00:01** — 00:00:25 H:M:S

10.5.4 TEMPERATURE OUT

SIGNAL TYPE

0 — 20 mA
4 — 20 mA
20 — 0 mA
20 — 4 mA
0 — 10 V
2 — 10 V
10 — 0 V
10 — 2 V

SCALING START

-20.0 °C = 4 mA (depending on the signal type)

SCALING END

+200.0 °C = 20 mA (depending on the signal type)

DURING ALARM

LOW (0 mA/0 V/3.4 mA/1.4 V)
HIGH (22 mA/10.7 V)
SAFE VALUE (depending on the signal type)

DURING CALIBRATION

MOVING
FROZEN
SAFE VALUE

SAFE VALUE

0.0 — **4.0** — 22.0 mA (depending on the signal type)
0 — 10.7 V

MANUAL MODE

OFF
ON

MAN. VALUE

0.0 — **4.0** — 22.0 mA (depending on the signal type)
0 — 10.7 V

10.5.5 BINARY OUTPUT 1 and BINARY OUTPUT 2

FUNCTION

NO FUNCTION
MIN. CONDUCT.
MAX. CONDUCT.
LK1 CONDUCT.
LK2 CONDUCT.
MIN. TEMP.
MAX. TEMP.
LK1 TEMP.
LK2 TEMP.
CALIB. TIMER
ALARM

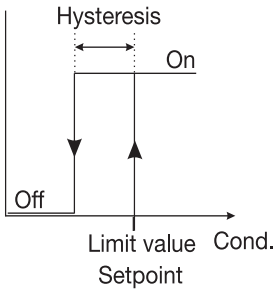

MAX limit comparator

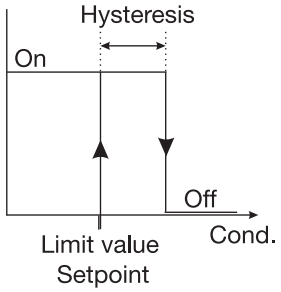

MIN limit comparator

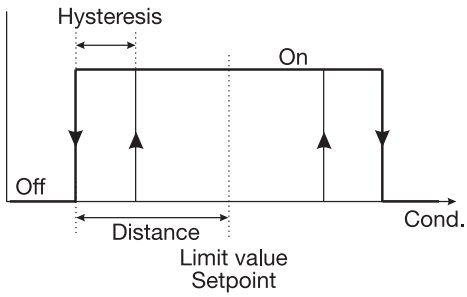

LK1 alarm window

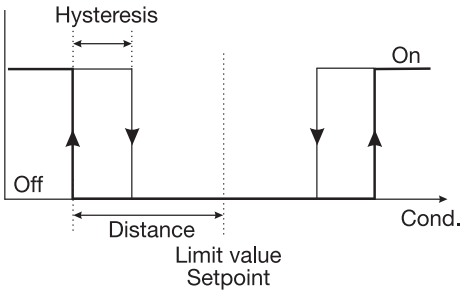

LK2 alarm window

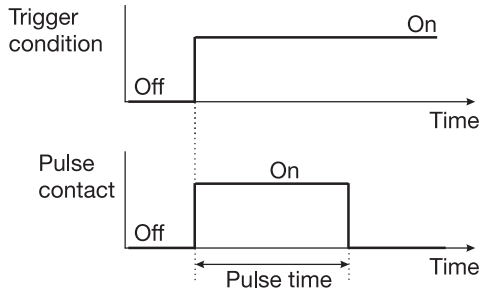

Pulse contact
Trigger condition longer than pulse duration

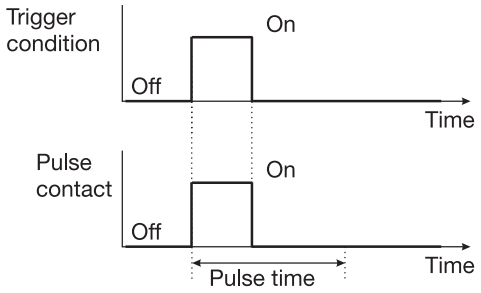

Pulse contact
Trigger condition shorter than pulse duration

LIMIT

-20.0 — 999.0 (depending on the function, see above)

HYSTERESIS

0.0 — **1.0** — 999.0 (depending on the function, see above)

SPACING

0.0 — 999.0 (depending on the function, see above)

MANUAL MODE

OFF
ON

FOR HOLD

INACTIVE
ACTIVE
FROZEN

FOR ALARM / CALIB.

INACTIVE
ACTIVE
FROZEN

ON-DELAY

00:00:00 — 01:00:00 H:M:S

OFF-DELAY

00:00:00 — 01:00:00 H:M:S

PULSE DURATION

00:00:00 — 01:00:00 H:M:S (see above: “Function, Pulse contact”)

10.5.6 BINARY INPUT 1 and BINARY INPUT 2

FUNCTION

NO FUNCTION
HOLD/LOCK KEY
RANGE/TEMPCO.
DILUTION

Setting parameters		**Binary input 1**	**Binary input 2**
Range/temperature coefficient changeover	Range1/TC1	open	open
	Range2/TC2	closed	open
	Range3/TC3	open	closed
	Range4/TC4	closed	closed
Key inhibit		closed	X
Hold function		X	closed
Start dilution function		close (0 —1 edge)	open
Stop dilution function		open	close (0 —1 edge)

10.5.7 DILUTION

(description: see “Dilution function”, page 58)

REDUCE

0 — **10** — 50 %

DOSING TIME

0:00:00 — **00:01:00** — 18:00:00 H:M:S

LOCK TIME

0:00:00 — **00:01:00** — 18:00:00 H:M:S

10.5.8 DEVICE DATA

LANGUAGE

GERMAN
ENGLISH
FRENCH
SPANISH
POLISH
SWEDISH
ITALIAN
PORTUGUESE
DUTCH
RUSSIAN



NOTE!

Entering the password 7485 in the administrator level will reset the operating language to English.

CONTRAST

0 — **6** — 11

LIGHTING

OFF
ON
IF OPERATED (approx. 50 sec after the last key operation: the lighting will be switched off)

LCD INVERSE

OFF
ON

10.6 Administrator level

- All parameters can be edited (altered) in this level.
- In this level, you can also define which parameters can be edited (altered) by a “normal” user, and/or which calibration actions are permitted. Editable parameters can be edited in the operator level. Non-editable parameters are marked in the operator level by a key symbol

You can access the administrator level as follows:

✱ Press the PGM key for at least 3 seconds.

✱ Use the ▼ or ▲ key to select ADMINISTRATOR LEVEL.

✱ Use ▼ or ▲ to enter the password 300.

✱ Press the PGM key.

Levels within the administrator level

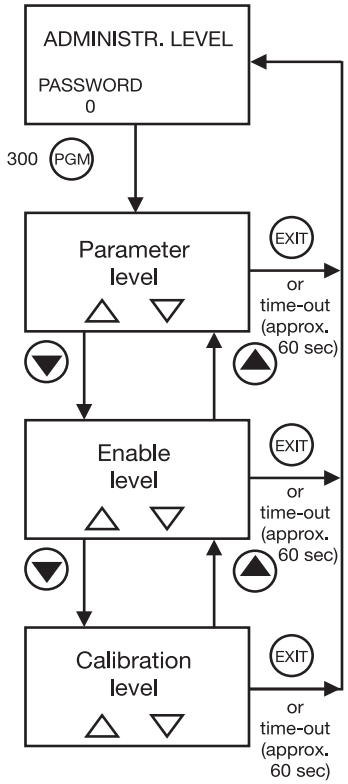

10.6.1 Parameter level

The administrator can edit all parameters for the operator level in this level. The structure “Parameter level” within the administrator level is identical to the operator level, see “Operator level”, page 47 and the following.

10.6.2 Enable level

In this level, the administrator can define which parameters can be altered or edited by the operator in the operator level.
The available options are READ ONLY and EDIT.
The structure “Parameter level” within the administrator level is identical to the operator level, see “Operator level”, page 47 and the following.

10.6.3 Calibration enable (CALIB. ENABLE)

In this level, the administrator can define whether the operator can calibrate or alter

- the relative cell constant
- the linear temperature coefficient
- the non-linear temperature coefficient.

10.7 Calibration level

All the calibrations that have been enabled by the administrator (administrator level) can be carried out in this level.

✱ Press the PGM key for at least 3 seconds.

✱ Use the ▼ or ▲ key to select CALIBRATION LEVEL.

10.7.1 REL. CELL CONSTANT (relative cell constant)

If this function has been enabled by the administrator, then the operator can calibrate the relative cell constant of the device here; see “Calibrating the relative cell constant”, page 62.

10.7.2 TEMPCO LINEAR (linear temperature coefficient)

If this function has been enabled by the administrator, then the operator can calibrate the device for liquids with a linear temperature coefficient;
see “Linear temperature coefficient (ALPHA)”, page 64.

10.7.3 TEMPCOMP NON-LIN. (non-linear temperature coefficient)

If this function has been enabled by the administrator, then the operator can calibrate the device for liquids with a non-linear temperature coefficient;
see “Non-linear temperature coefficient (ALPHA)”, page 67.

10 Operation

10.8 Dilution function

Brief description

For cooling water, the conductivity is used to deduce the total salt content. If a conductivity limit is reached (at the maximum permissible salt content/concentration), then the cooling water must be diluted. A dilution valve is opened, the concentrated water flows out, and is replaced by fresh water. When the conductivity of the cooling water has fallen below the limit, the dilution valve is closed again.

Addition of biocide

A biocide is added to the cooling water, to prevent biological growth in the cooling system. There is no ideal setting for the amount used and the timing of the biocide dosing. In most cases, the dosing time is used as the controlled variable. The dosing quantity is therefore defined by the pumping rate and duration (system-specific). The success of the biocide treatment must be checked at regular intervals.

Dilution before biocide addition

If a biocide that increases conductivity is added to the cooling water, this could increase the conductivity to beyond the limit. This would cause the dilution valve to be opened, and a portion of the added biocide would be discharged into the waste water (possibly contravening regulations!).

To prevent this, the conductivity in the cooling system is reduced by dilution to, for example, 10 % below the limit, before the biocide is added. The dilution valve is then temporarily blocked.

Dilution inhibit

After adding the biocide, the dilution should be inhibited for a while, until the biocide that is present in the cooling system is mostly decomposed (observe the statutory regulations!).

Implementation with the device

- The dilution function is only available in the "Conductivity measurement" mode – not for concentration measurement.
- When the dilution function is activated, all the parameters that are irrelevant for this function are switched off.
- The dilution function can be started through binary input 1 and stopped through binary input 2, see “BINARY INPUT 1 and BINARY INPUT 2”, page 54.
  The dilution function can also be stopped by using the EXIT key.
- The present status of the dilution function will be shown in the display.
- The dilution valve is controlled by output K1.
- The addition of biocide valve is controlled by output K2.
- After dilution, K1 goes to the configured hold state (dilution inhibit).
- The dilution factor can be adjusted through binary input 1 over a range 1 — 50 % below the limit value. The preset value is 10 % below the limit.

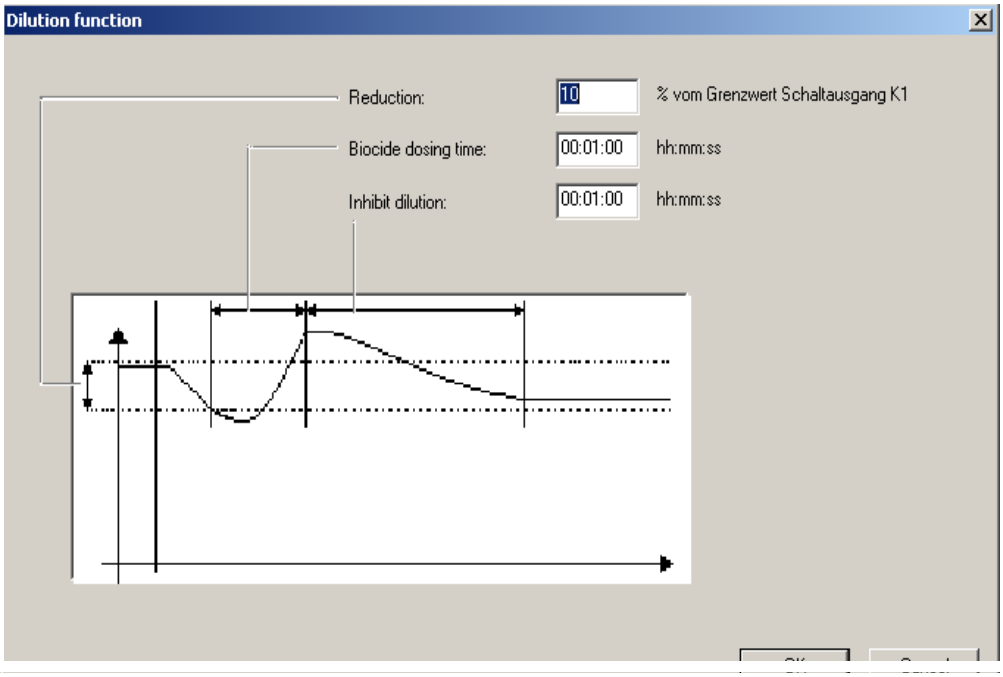

10.8.1 Stop dilution

All the parameters are system-dependent, and must be adjusted to suit system requirements.

✱ Press the PGM key for at least 3 seconds.

✱ Use the ▼ or ▲ key to select OPERATOR LEVEL; use the PGM key to confirm the selection.



✱ Use the ▼ or ▲ key to select BINARY INPUT; use the PGM key to confirm the selection.

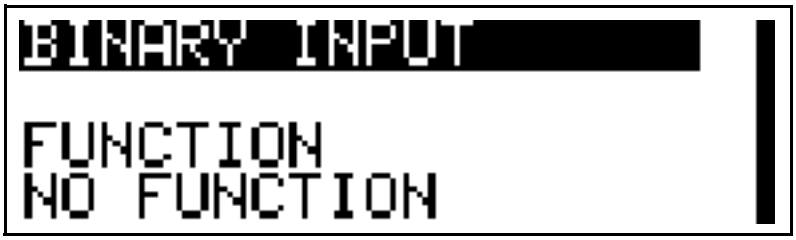

✱ Use the ▼ or ▲ key to select DILUTION; use the PGM key to confirm the selection.



* Change to the operator level, using the EXIT key.
* Use the ▼ key to select DILUTION.



* Confirm the selection with the PGM key.



* Use the ▼ or ▲ key to set the dilution factor in the range from 1 — **10** — 50 % below the limit value.
* Confirm the selection with the PGM key.
* Use the ▼ or ▲ key to select DOSING TIME; use the PGM key to confirm the selection.



* Set the dosing time with the ▼ and ▲ keys in the range from 0:00:00 — **00:01:00**— 18:00:00 H:M:S.
* Confirm the setting with the PGM key.
* Use the ▼ or ▲ key to select LOCK TIME; use the PGM key to confirm the selection.



* Set the lock time with the ▼ or ▲ key in the range from 0:00:00 — **00:01:00**— 18:00:00 H:M:S.
* Confirm the setting with the PGM key.

NOTE!

If there is an interruption in the supply voltage during dilution, the function will be canceled.

The dilution function will have to be restarted if it is to be continued.

11 Calibration

11.1 General

The device offers various calibration options to increase the precision.

NOTE!

The conductivity sensor should be cleaned and calibrated at regular intervals, depending on the medium being measured.

The K1 LED blinks during calibration.

11.2 Calibrating the relative cell constant

In order to meet enhanced demands for precision, the cell constant must first be calibrated.

Requirements

- The supply voltage for the device must be present, see Chapter 7 “Installation”, page 33ff.
- The sensor must be connected to the transmitter (applies to the split version).
- The transmitter is in the measurement mode.

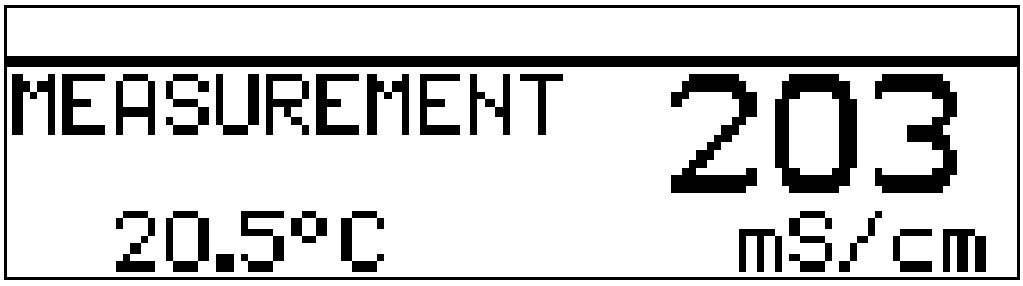

✱ Immerse the conductivity sensor in a reference solution with a known conductivity.

CAUTION!

The temperature of the sample solution must remain constant during calibration!

✱ Press the PGM key for at least 3 seconds.

✱ Use the ▼ or ▲ key to select CALIBRATION LEVEL; use the PGM key to confirm the selection.

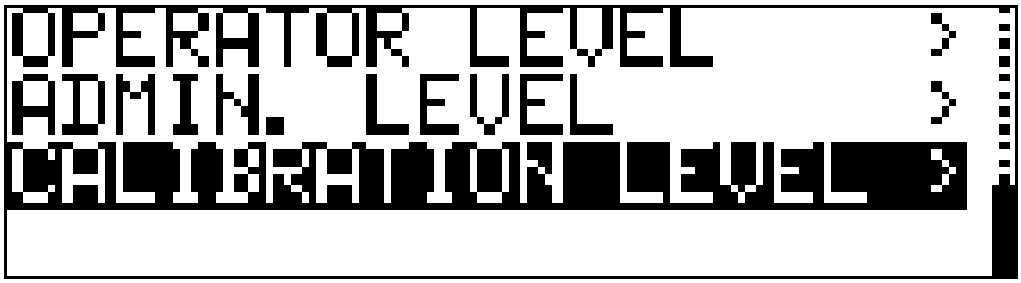

✱ Use the ▼ or ▲ key to select REL. CELL CONSTANT; use the PGM key to confirm the selection.

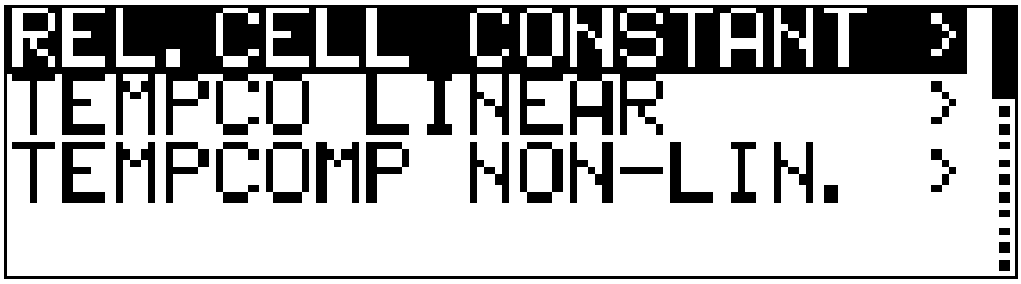

✱ When the measurement is stable, press the PGM key.

✱ Use the ▼ or ▲ key to correct the indicated uncompensated conductivity to match the known value for the reference solution.

✱ Press PGM.
The relative cell constant calculated by the device will be displayed.

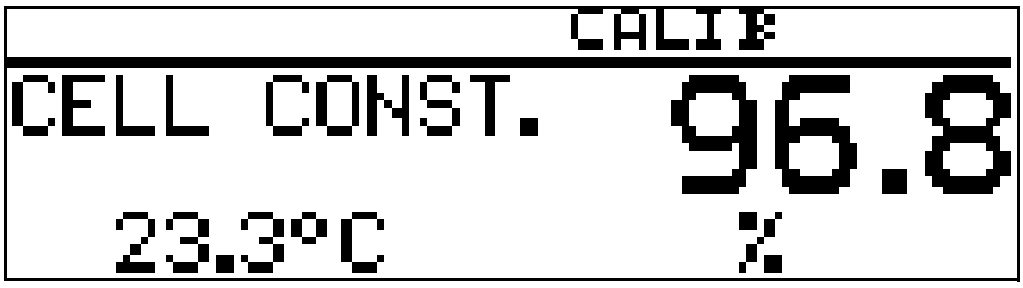

✱ To accept the relative cell constant that has been determined -> press the PGM key for at least 3 seconds or to reject the value -> press the EXIT key.

The transmitter is in the calibration menu.

✱ Press the EXIT key;
The transmitter is now in the measurement mode, and shows the compensated conductivity of the reference solution.

11 Calibration

11.3 Calibrating the temp. coefficient of the sample solution

11.3.1 Linear temperature coefficient (ALPHA)

The conductivity of any sample solution will change according to its individual temperature coefficient.
We therefore recommend carrying out a calibration of the temperature coefficient.

Requirements

- The supply voltage for the device must be present, see Chapter 7 “Installation”, page 33ff.
- The sensor must be connected to the transmitter (applies to the split version).
- The transmitter is in the measurement mode.

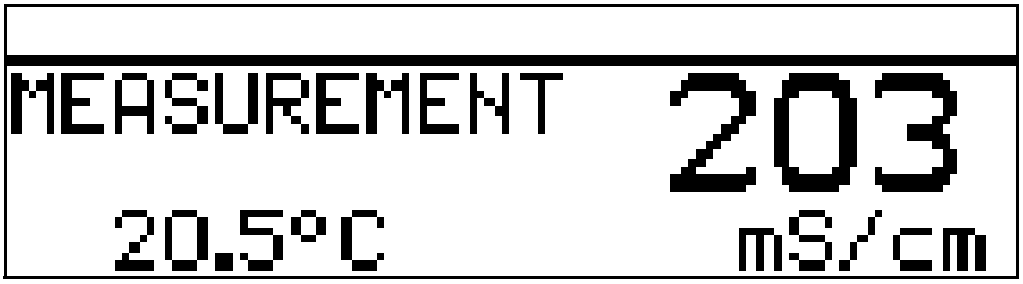

✱ Immerse the conductivity sensor in a sample of the solution to be measured.

✱ Press the PGM key for at least 3 seconds.

✱ Use the ▼ or ▲ key to select CALIBRATION LEVEL; use the PGM key to confirm the selection.

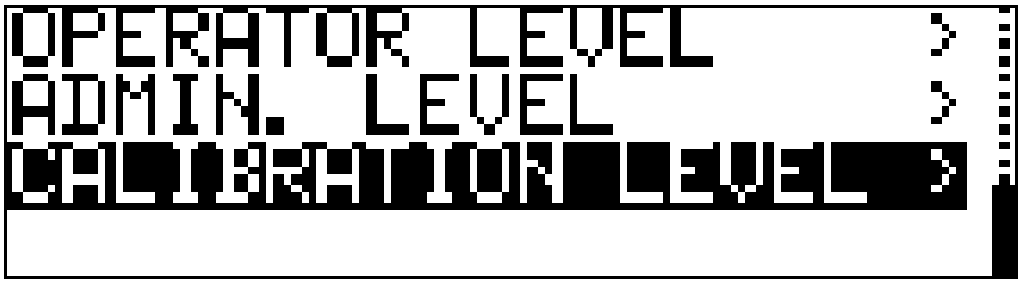

✱ Use the ▼ or ▲ key to select TEMPCO LINEAR; use the PGM key to confirm the selection.

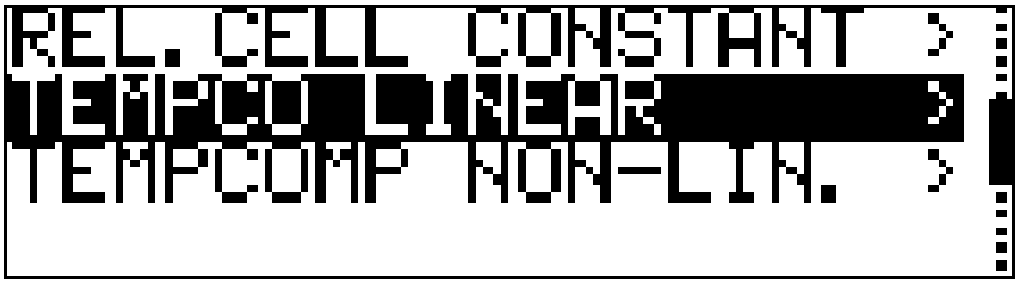

✱ Use the ▲ or ▲ key to enter the working temperature; confirm with the PGM key.

NOTE!

The working temperature must be at least 5 °C above or below the reference temperature (25.0 °C).

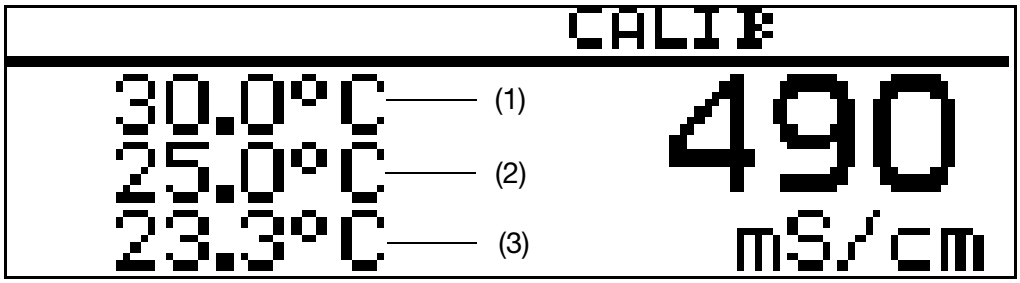

The LC display now shows

(1) selected working temperature (blinking)
(2) reference temperature (blinking)
(3) present sensor temperature (steady)

✱ Warm up the sample medium until both the reference and the working temperatures have been reached (the corresponding values no longer blink).

CAUTION!

During calibration, the rate of change of temperature for the sample solution must not exceed
10 °C/min for a device with exposed temperature sensor, or
1 °C/min for a device with an internal temperature sensor.

As soon as one of the target temperatures has been reached, its display becomes static (no longer blinking).

NOTE!

Calibration can also be carried out through a cooling procedure (falling temperature). In this case, it starts above the working temperature and finishes below the reference temperature.

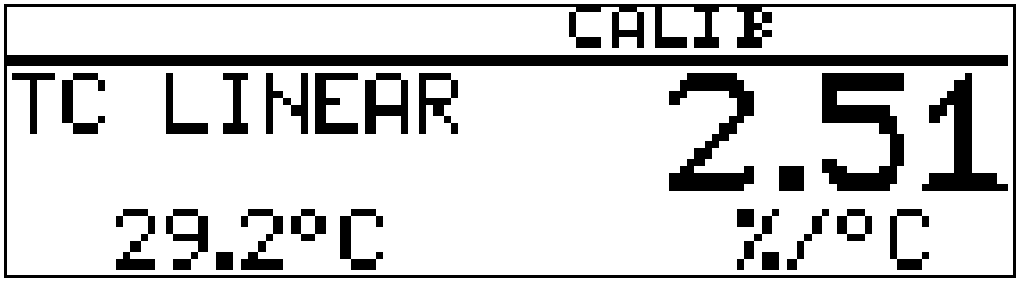

The LC display now shows the derived temperature coefficient in %/°C.

To accept the temperature coefficient that has been determined -> press the PGM key for at least 3 seconds or to reject the value -> press the EXIT key.

The transmitter is in the calibration menu.

✱ Press the EXIT key.
The transmitter is now in the measurement mode, and shows the compensated conductivity of the reference solution.

11.3.2 Non-linear temperature coefficient (ALPHA)

General

Since the temperature coefficient of some media is not constant over a sizeable temperature range, the device provides the option of subdividing a temperature range (T_{Start} to T_{End}) into 5 sections. A different TC value can be used for compensation in each of these range sections. This "TC curve" can be

- edited with the setup program and transmitted to the device.
- or calibration can be performed automatically on the device.

Determining the TC curve

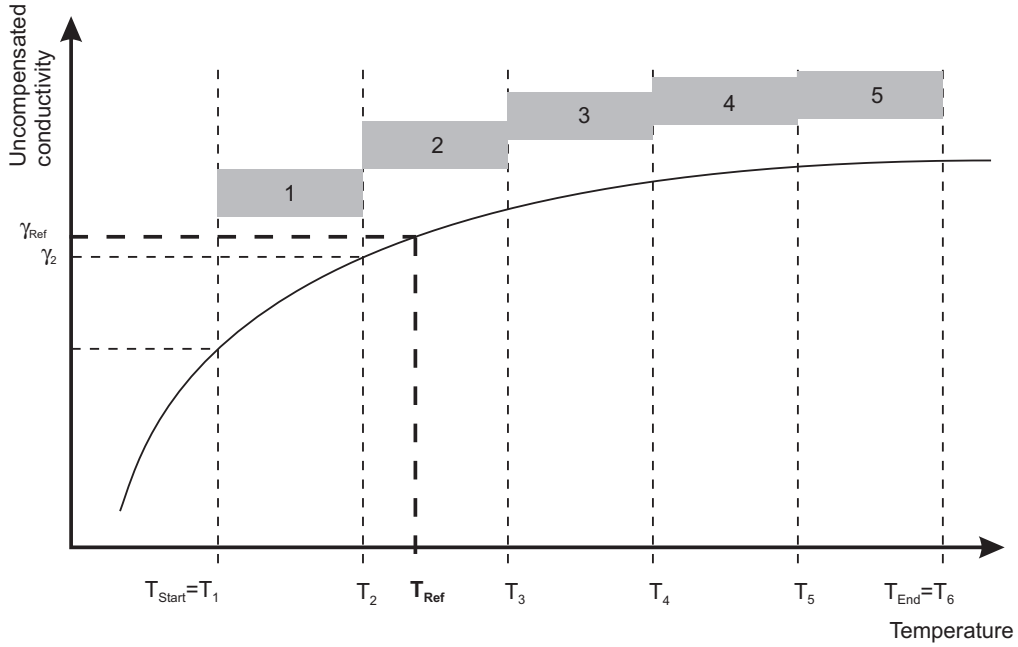

Calculation of a temperature coefficient

$$\alpha_1 = \frac{\left(\frac{\gamma_1}{\gamma_{Ref}} - 1\right) \times 100}{T_1 - T_{Ref}}$$

α temperature coefficient (TC)

γ uncompensated conductivity

11 Calibration

TC curve

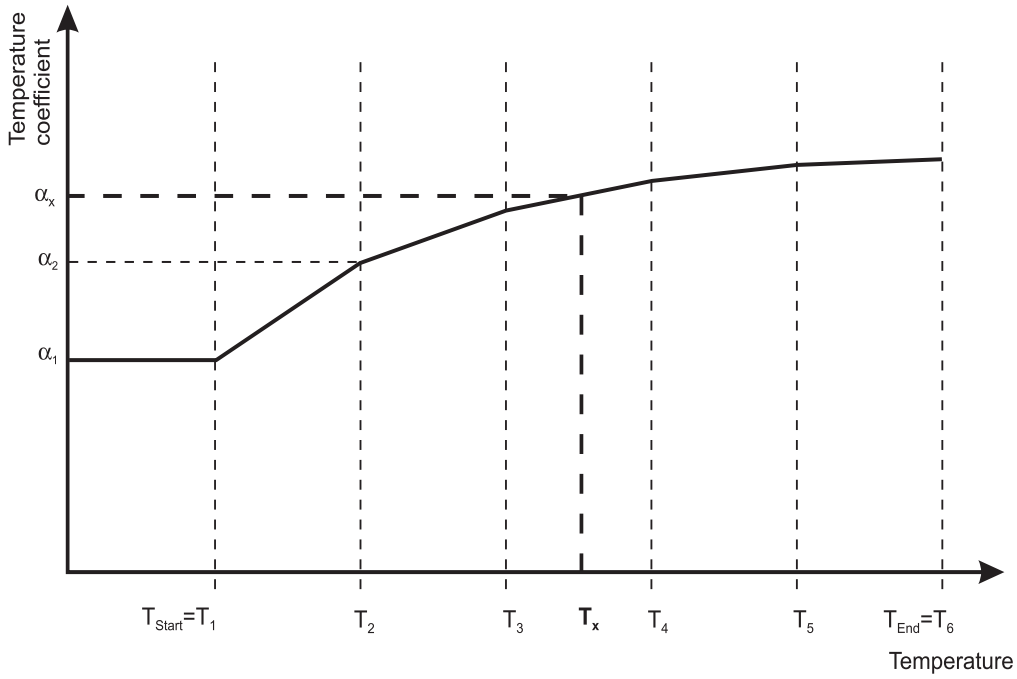

Temperature compensation with the TC curve

The present temperature of the medium is applied to the TC curve to determine the corresponding temperature coefficient, see “TC curve”, page 68.

Intermediate values, e.g. (α_x at T_x) between two known values (α_3 at T_3) and (α_4 at T_4) are derived through a linear interpolation.

The derived TC is used to calculate the compensated conductivity, in the same way as with the linear compensation.

NOTE!

If the measured temperature is lower than the start temperature, the first TC is used for compensation.
If the measured temperature is higher than the end temperature, the last TC is used for compensation.

$$\gamma_{(Comp)} = \frac{\gamma_{(Meas)}}{\left(1+\frac{\alpha_x}{100} * (T_x - T_{Ref})\right)}$$

Sequence for automatic calibration

The TC curve is automatically recorded over a temperature range that has been defined by the user. The temperature range between the start and end temperatures is subdivided into 5 sections of equal size.

The temperature range must be larger than 20 °C, and cover the reference temperature.
Example: Reference temperature 25 °C, start temperature 18 °C and end temperature 50 °C.

NOTE!

The rate of change of the temperature must not exceed

- 10 °C/min for an exposed temperature sensor, and
- 1 °C/min for an internal temperature sensor.

Requirements

- The supply voltage for the device must be present, see Chapter 7 “Installation”, page 33ff.
- The sensor must be connected to the transmitter (for the split version).
- The transmitter is in the measurement mode.

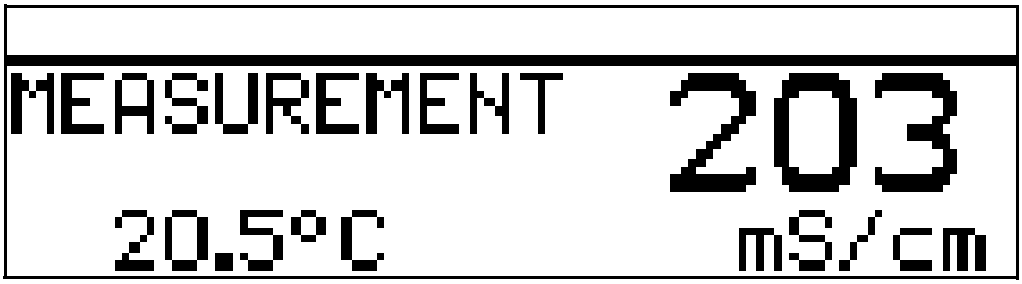

✱ Immerse the conductivity sensor in a sample of the solution to be measured.

✱ Press the PGM key for at least 3 seconds.

✱ Use the ▼ or ▲ key to select CALIBRATION LEVEL; use the PGM key to confirm the selection.

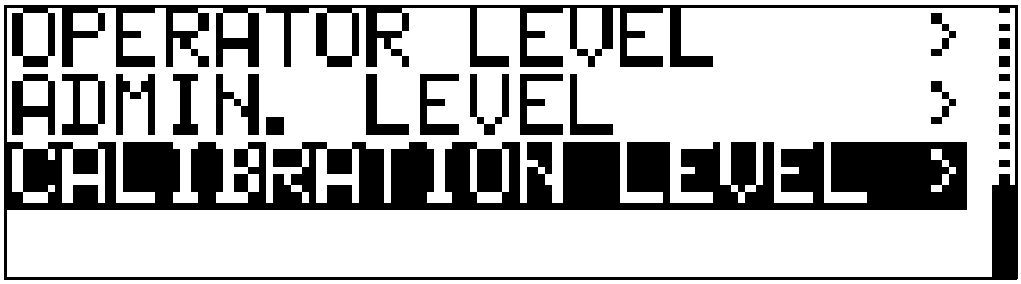

✱ Use the ▼ or ▲ key to select TEMPCOMP NON-LIN.; use the PGM key to confirm the selection.

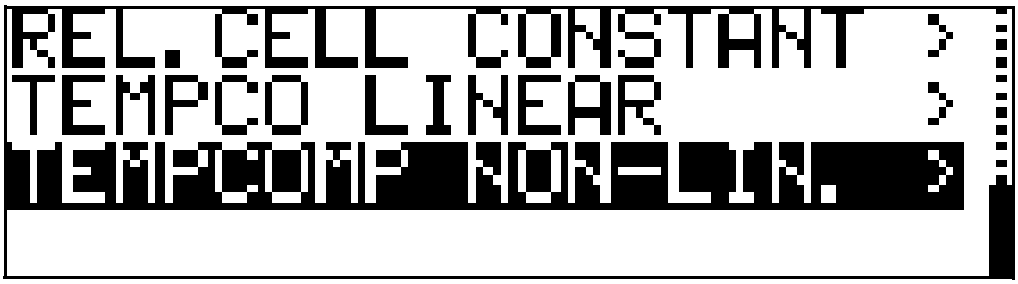

✱ Use the ▼ or ▲ key to enter the start temperature; confirm with the PGM key.

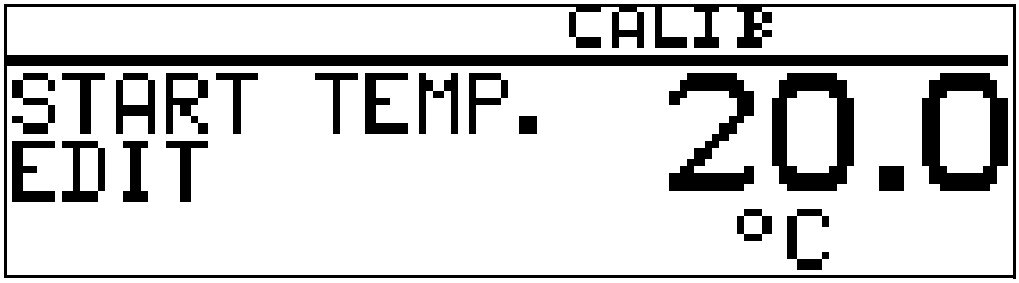

NOTE!

The start temperature must be lower than the reference temperature (25.0 °C).

✱ Use the ▼ or ▲ key to enter the end temperature; confirm with the PGM key.

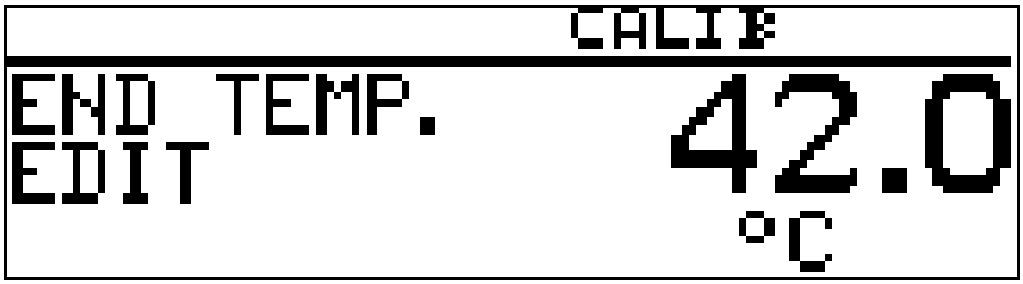

NOTE!

The end temperature must be at least 20°C above the start temperature.

The transmitter will define the fixed temperature points itself. The LC display now shows

- at top (1): the next target temperature (blinking)
- below (2): the present sensor temperature (steady)

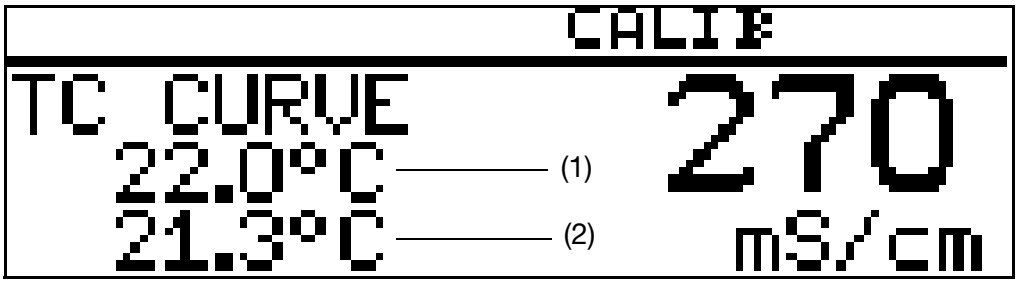

✱ Warm up the sample medium until is it above/below the temperature that is blinking.
The next target measured temperature is displayed as blinking.

CAUTION!

During calibration, the rate of change of temperature for the sample solution must not exceed
10 °C/min for a device with exposed temperature sensor, or
1 °C/min for a device with an internal temperature sensor.

As soon as one of the target temperatures has been reached, its display becomes static (no longer blinking).

✱ Warm up the sample medium until is it above the temperature that is blinking.

✱ Repeat the procedure as often as required, until the device has determined all 6 temperature coefficients.

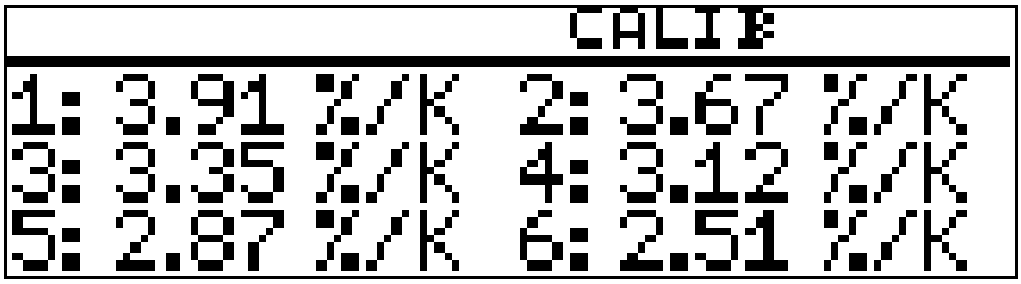

The LC display now shows the derived temperature coefficients in %/°C.

✱ To accept the temperature coefficients that have been determined -> press the PGM key for at least 3 seconds or
to reject the values -> press the EXIT key.

The transmitter is in the calibration menu.

✱ Press the EXIT key.
The transmitter is now in the measurement mode, and shows the compensated conductivity of the reference solution.

12 Maintenance

12.1 Cleaning the conductivity sensor



CAUTION!

Do not use solvents.

Hard-to-remove crusts and deposits can be softened and removed with dilute hydrochloric acid.

Observe the safety regulations!

Deposits

Deposits on the sensor section can be removed with a soft brush (e.g. a bottle brush).

Possible errors

Problem	Possible cause	Measures
No measurement display or signal output	Supply voltage missing	Check supply voltage, also check terminals
Measurement display 000 or signal output 0 % (e.g. 4 mA)	Sensor not immersed in medium, reservoir level too low	Top up the reservoir
	Flow-through fitting is blocked	Clean flow-through fitting
	Sensor is faulty	see “Checking the device”, page 74
Measurement display 8888 blinking + device status ALARM blinking. The temperature display is OK or LED 1 + LED 2 blink	Out of range => above or below measurement/display range	Choose suitable measurement range, or check the concentration table
Measurement display 8888 blinking + device status ALARM blinking. The temperature display shows 8888 blinking or LED 1 + LED 2 blink	The temperature sensor is faulty.	The transmitter or the conductivity sensor has to be replaced or set measurement acquisition "Temperature input" briefly to manual, see “TEMPERATURE IN”, page 51.
Wrong or unstable measurement display	Sensor not immersed deeply enough	Top up the reservoir
	Inadequate mixing	Ensure good mixing, for sensor: make sure there is an all-round clearance of approx. 5 mm, to allow all-round flow
	Air bubbles	Check mounting site, see “General”, page 19.

13 Eliminating faults and malfunctions

13.1 Checking the device

General

The device is calibrated at the factory, and is maintenance-free. If, nevertheless, measurement deviations appear with no apparent cause, the transmitter can be tested as follows.

13.1.1 Resistance loop test

Cell constant

CAUTION!

The cell constant of the device is type-dependent!

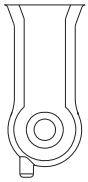	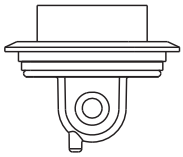	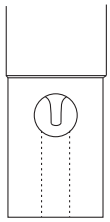
PEEK K = 5,0 1/cm	PEEK K = 5,15 1/cm	PVDF K = 5,45 1/cm

Position of resistor loop

CAUTION!

During calibration, do not touch the sensitive part of the cell or put it down on any surface, otherwise the measurement will be falsified.

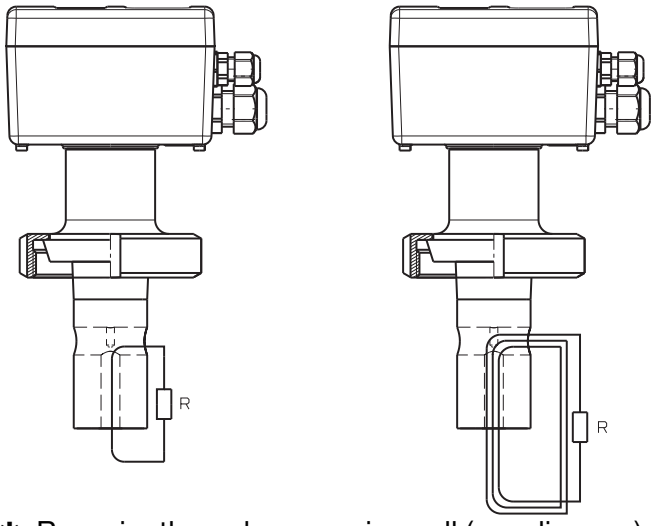

✱ Run wire through measuring cell (see diagram)

✱ Connect resistor R to wire

Calculating resistance

Formula for calculating the resistance of the resistor loop:

$$R = \frac{N^2 \cdot K}{Lf}$$

R resistance of resistor loop
N number of loop windings
K cell constant
Lf required display in S/cm

Note: 1 mS/cm = 1·10-3 S/cm
1 µS/cm = 1·10-6 S/cm

For display values up to 20 mS, the resistor loop must have one winding.
For display values up to 50 mS, the resistor loop must have three windings.

Example 1

The device with a T-shaped PVDF measuring cell should display 20 mS:

$$R = \frac{1^2 \cdot 5.45\ 1/cm}{20 \cdot 10^{-3}\ S/cm} = 272.5\ \Omega$$

To get a display of 20 mS/cm, the resistor loop (with 1 winding) must have a resistance of 272.5 ohm.

Example 2

The device with a T-shaped PVDF measuring cell should display 500 mS:

$$R = \frac{3^2 \cdot 5.45\ 1/cm}{500 \cdot 10^{-3}\ S/cm} = 98.1\ \Omega$$

To get a display of 500 mS/cm, the resistor loop (with 3 windings) must have a resistance of 98.1 ohm.

13 Eliminating faults and malfunctions

Pre-calculated values

Display value 0 is obtained if the following conditions are met:

- the sensor is dry **and**
- the sensor does not have any conductive coatings **and**
- a resistor loop is not installed.

Display at measuring range end	**Number of windings**	**Cell constant** [1/cm]	**Required resistance** [Ω]
500 µS/cm	1	5.0	10.000
1000 µS/cm			5.000
2000 µS/cm			2.500
5000 µS/cm			1.000
10 mS/cm			500
20 mS/cm			250
50 mS/cm	3		900
100 mS/cm			450
200 mS/cm			225
500 mS/cm			90
1000 mS/cm			45
2000 mS/cm			22,5

Running the test

✱ Define the test resistance.

✱ Electrically connect the device, see Chapter 7 “Installation”, page 33.

✱ Install resistor loop as shown in the diagram.

13.1.2 Reference liquid test

Immerse in test solution

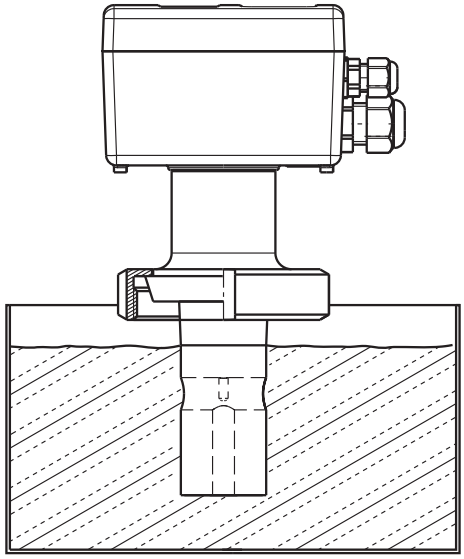

Test sequence

- ✱ Prepare the conductivity test solution in a container of adequate size.
- ✱ Connect up the device, see Chapter 7 “Installation”, page 33.
- ✱ Select the range appropriate to the conductivity test solution, see Chapter 10.5.1 “CONDUCTIVITY IN (conductivity input)”, page 48 -> RANGE 1 — 4
- ✱ Set TC to 0 %/°C, see Chapter 10.5.1 “CONDUCTIVITY IN (conductivity input)”, page 48 -> TEMPCO.
- ✱ Immerse the cell in the container, and do not move it any more during the measurement.

13.1.3 Reference measuring device test

Immerse in test solution

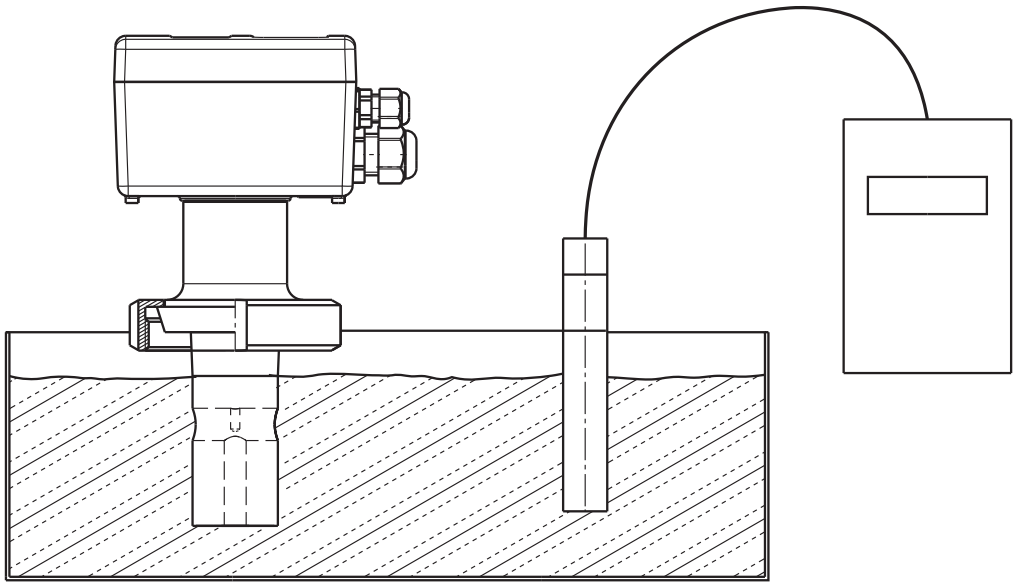

Test sequence

- ✱ Prepare the conductivity test solution in a container of adequate size.
- ✱ Connect up the device, see Chapter 7 “Installation”, page 33.
- ✱ Select the range appropriate to the conductivity test solution, see Chapter 10.5.1 “CONDUCTIVITY IN (conductivity input)”, page 48 -> RANGE 1 — 4
- ✱ Set TC to 0%/°C, see Chapter 10.5.1 “CONDUCTIVITY IN (conductivity input)”, page 48 -> TEMPCO.
- ✱ Set the TC for the reference device to 0 %/°C as well (see operating instructions for the reference device). If this is not possible, then the sample liquid must be tempered to the reference temperature for the reference device.
- ✱ Immerse the cell under test and the cell for the reference device in the container, and do not move them any more during the measurement.
- ✱ The output and display of the device under test or the attached display unit must match the indication of the attached reference device, taking into account acceptable device deviations.

14.1 Before configuration

If a number of device parameters have to be modified in the device, then it is advisable to note them in the table below, and then modify these parameters in the sequence given.



NOTE!

The following list shows the maximum number of parameters that can be altered.

Depending on the configuration, some of the parameters will not be alterable (editable) for your device.

Parameter	Selection/value range **Factory setting**	New setting	see page
Conductivity input			
Range 1 — 4	0 — 500 µS/cm **0 — 1000 µS/cm** 0 — 2000 µS/cm 0 — 5000 µS/cm 0 — 10 mS/cm 0 — 20 mS/cm 0 — 50 mS/cm 0 — 100 mS/cm 0 — 200 mS/cm 0 — 500 mS/cm 0 — 1000 mS/cm 0 — 2000 mS/cm (uncompensated)		48
Temperature compensation	**linear** non-linear natural water		48
Temperature coeff. 1 — 4	0 to **2.20** to 5.5 %/°C		48
Reference temperature	15.0 to **25.0** to 30 °C		48
Cell constant	2.00 — **6.80** — 10.00 1/cm		48
Relative cell constant	80.0 — **100.0** — 120.0 %		48
Mounting factor	80.0 — **100.0** — 120.0 %		48
Concentration measurement	**no function** NaOH HNO_3 customer-specific		49
Offset	-200 to **0** to +200 mS/cm		49
Filter time	**00:00:01** — 00:00:25 H:M:S		49
Calibration interval	**0** — 999 days		49

14 Appendix

Parameter	Selection/value range **Factory setting**	New setting	see page
Conductivity output			
Signal type	0 — 20 mA **4 — 20 mA** 20 — 0 mA 20 — 4 mA 0 — 10 V 2 — 10 V 10 — 0 V 10 — 2 V		50
Scaling start	**0** — 90 % = 4 mA (e.g.) of range span		50
Scaling end	**100** — 10 % = 20 mA (e.g.) of range span		50
During alarm	**low** high safe value		50
During calibration	**moving** frozen safe value		50
Safe value	0.0 — **4.0** — 22.0 mA		50
Manual mode	**off** on		50
Manual value	0.0 — **4.0** — 22.0 mA		50
Temperature input			
Unit	**°C** °F		51
Measurement acquisition	**sensor** manual		51
Manual value	-20.0 to **25** to 150 °C		51
Offset	-15.0 to **0.0** to +15 °C		51
Filter time	00:00:00 — **00:00:01** — 00:00:25 H:M:S		51
Temperature output			
Signal type	0 — 20 mA **4 — 20 mA** 20 — 0 mA 20 — 4 mA 0 — 10 V 2 — 10 V 10 — 0 V 10 — 2 V		51
Scaling start	-20 to **0.0** to 183 °C = 4 mA (0 — 90 % of range span)		51
Scaling end	-3 to **150** to 200 °C = 20 mA (100 — 10 % of range span)		51

Parameter	Selection/value range **Factory setting**	New setting	see page
During alarm	**low** high safe value		50
During calibration	**moving** frozen safe value		50
Safe value	0.0 — **4.0** — 22.0 mA		51
Manual mode	**off** on		50
Manual value	0.0 — **4.0** — 22.0 mA		50
Binary output 1 or binary output 2			
Function	**no function** conductivity MIN contact conductivity MAX contact conductivity LK1 conductivity LK2 temperature MIN contact temperature MAX contact temperature LK1 temperature LK2 calibration timer alarm		52
Limit value	**-20.0** — 9999.0		53
Hysteresis	0.0 — **1.0** — 999.0		53
Spacing	**0.0** — 999.0		53
Manual mode	**off** on		53
For “Hold”	**inactive** active frozen		53
For alarm/calibration	**inactive** active frozen		53
Switch-on delay	**00:00:00** — 01:00:00 H:M:S		53
Switch-off delay	**00:00:00** — 01:00:00 H:M:S		53
Pulse duration	**00:00:00** — 01:00:00 H:M:S		53
Binary input			
Function	**no function** key lock / hold meas. range / temperature coefficient dilution function		54
Dilution function			
Reduction	0 — **10** — 50 %		54
Dosing time	00:00:00 — **00:01:00** — 18:00:00 H:M:S		54

14 Appendix

Parameter	Selection/value range **Factory setting**	New setting	see page
Lock time	00:00:00 — **00:01:00** — 18:00:00 H:M:S		54
Device data			
Language	**German** English French Spanish Polish Swedish Italian Portuguese Dutch Russian		55
Contrast	0 — **6** — 11		55
Lighting	off on **during operation**		55
LCD inverse	**off** on		55

部件名称 Product group: 202756	有毒有害物质或元素 Hazardous substances					
	铅（Pb）	汞（Hg）	镉（Cd）	六价铬（Cr(VI)）	多溴联苯（PBB）	多溴二苯醚（PBDE）
外壳 Housing (Gehäuse)	○	○	○	○	○	○
过程连接 Process connection (Prozessanschluss)	○	○	○	○	○	○
-螺母 Nut (Mutter)	X	○	○	○	○	○
螺钉 Screw (Schraube)	X	○	○	○	○	○

本表格依据 SJ/T 11364-2014**的规定编制。**

(This table is prepared in accordance with the provisions of SJ/T 11364-2014.)

O：**表示**该有害物质在该部件所有均质材料中的含量均在 GB/T 26572 规定的限量要求以下。

(O: Indicates that said hazardous substance contained in all of the homogeneous materials for this part is below the limit requirement of GB/T 26572.)

X：**表示**该有害物质至少在该部件的某一均质材料中的含量超出 GB/T 26572 规定的限量要求。

(X: Indicates that said hazardous substance contained in one of the homogeneous materials used for this part is above the limit requirement of GB/T 26572.)

JUMO GmbH & Co. KG
Street address:
Moritz-Juchheim-Straße 1
36039 Fulda, Germany
Delivery address:
Mackenrodtstraße 14
36039 Fulda, Germany
Postal address:
36035 Fulda, Germany
Phone: +49 661 6003-0
Fax: +49 661 6003-607
Email: mail@jumo.net
Internet: www.jumo.net

JUMO Instrument Co. Ltd.
JUMO House
Temple Bank, Riverway
Harlow, Essex, CM20 2DY, UK
Phone: +44 1279 63 55 33
Fax: +44 1279 62 50 29
Email: sales@jumo.co.uk
Internet: www.jumo.co.uk

JUMO Process Control, Inc.
6733 Myers Road
East Syracuse, NY 13057, USA

Phone: +1 315 437 5866
Fax: +1 315 437 5860
Email: info.us@jumo.net
Internet: www.jumousa.com

