JUMO Simulator

for electrolytic conductivity
type 202711/20



Operating Manual

20271120T90Z001K000

V2.00/EN/00727319/2019-10-18

Contents

1 Introduction 4

1.1 Safety information 4
1.1.1 General Information 4
1.1.2 Warning symbols 4
1.1.3 Note symbols 4
1.2 Description 5
1.2.1 Intended use 5
1.2.2 Operating principle 5

2 Identifying the device version 6

2.1 Order details 6
2.2 Scope of delivery 6
2.3 Accessories 6

3 Electrical connection 7

4 Operation 8

4.1 Testing the input of a transmitter for conductive conductivity 8
4.1.1 Calculation examples 8
4.2 Testing the input and temperature input of a transmitter for conductive conductivity 10
4.2.1 Transmitter settings 10
4.2.2 Settings and steps for operating the simulator 10
4.3 Testing switch and controller outputs 11

5 Technical data 12

6 China RoHS 13

1 Introduction

1.1 Safety information

1.1.1 General Information

This manual contains information that must be observed in the interest of your own safety and to avoid material damage. This information is supported by symbols which are used in this manual as indicated.

Please read this manual before starting up the device. Store this manual in a place that is accessible to all users at all times.

If difficulties occur during startup, please do not intervene in any way that could jeopardize your warranty rights!

1.1.2 Warning symbols



CAUTION!

This symbol in connection with the signal word indicates that **personal injury** may occur if the respective precautionary measures are not carried out.

NOTICE!

This note in connection with the signal word indicates that **material damage or data loss** will occur if the respective precautionary measures are not taken.

1.1.3 Note symbols



NOTE!

This symbol refers to **important information** about the product, its handling, or additional benefits.

1.2 Description

1.2.1 Intended use

The simulator for electrolytic conductivity is used for startup, for calibration, and for inspecting/troubleshooting transmitters for conductive conductivity.

1.2.2 Operating principle

This simulator can be used for checking measuring amplifiers and connecting cables for electrolytic conductivity. It can also be used for simulating various conductivity measured values, so as to test and optimize display response, control response, measuring amplifier outputs, and downstream equipment. In this way, the device assists the user during dry system startup and troubleshooting.

The simulator can only be used with conductivity measurement equipment that is based on conductive 2-electrode measuring cells. A table printed in this operating manual can be used to crosscheck the conductance of different simulation resistance values – selected by means of a rotary switch. The table includes the allocation of various cell constants (K = 0.01; 0.1; 1.0; 3.0 and 10.0).

In addition to the conductance, it is also possible to test the temperature input of a measuring device, whereby a Pt100 is simulated at the temperatures of 25 °C and 75 °C. A 1.1-m long connecting cable is included in the scope of delivery.

2 Identifying the device version

2.1 Order details

	(1)	Basic type
202711/20		JUMO simulator for electrolytic conductivity

	(1)
Order code	
Order example	202711/20

2.2 Scope of delivery

JUMO simulator for electrolytic conductivity, 9-V block battery, operating manual

2.3 Accessories

Designation	Part no.
Connecting cable (as replacement for the cable included in the scope of delivery of the device) for conductivity simulator 202711/20, 5-pole diode plug on open wire ends, length 1.1 m, for testing measuring devices with screw terminals as conductivity measurement input 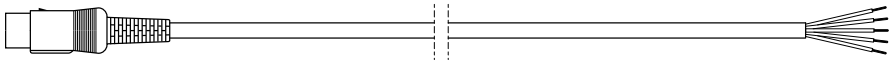	00082901

Use the connecting cable included in the scope of delivery (5-pole diode plug according to DIN 41524 on open wire ends) to connect the simulator with the transmitter to be tested.

Connect the shield (pin 2) with the low-resistance connection (outer electrode) of the conductivity transmitter.

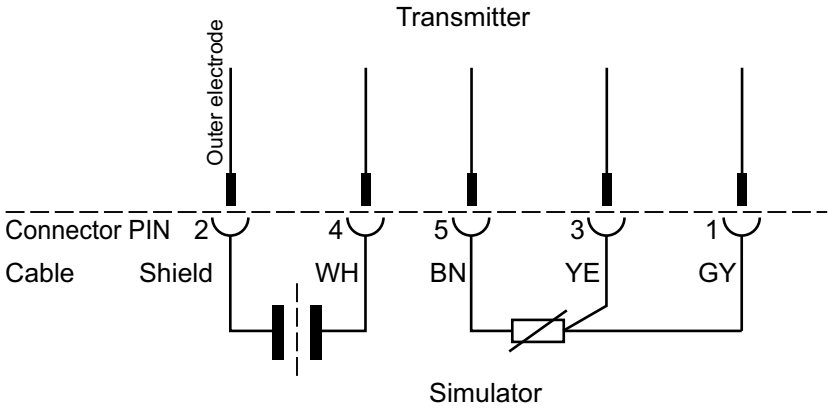

4 Operation

4.1 Testing the input of a transmitter for conductive conductivity

1. Using the connecting cable, connect the simulator to the transmitter for conductive conductivity (1).
2. Set the simulator selection switch to "∞Ω" (2).
   The transmitter must display 0 +3 digits
3. Switch off the transmitter's temperature compensation (temperature coefficient T_C = 0 %/K)
4. Make a note of cell constant K and the measuring range from the transmitter's nameplate.
5. Determine the right simulator switch position for your transmitter by referring to the following table and the method used in example 1 on page 8.

   If the cell constant for your transmitter is not listed in the table, you can determine the right switch position by using example 2 on page 9.
6. Set the simulator switch to the position that you have determined.
7. Adjust the measured value displayed on the transmitter by calibrating the cell constant – using the operating manual for the transmitter.
8. Conclude the testing of the transmitter.



Simulated conductivity value depending on the resistance value set on the simulator and the transmitter cell constant

		K				
		0.01	0.1	1.0	3.0	10.0
R	12.5 Ω	800 µS	8 mS	80 mS	240 mS	800 mS
	25 Ω	400 µS	4 mS	40 mS	120 mS	400 mS
	50 Ω	200 µS	2 mS	20 mS	60 mS	200 mS
	125 Ω	80 µS	800 µS	8 mS	24 mS	80 mS
	250 Ω	40 µS	400 µS	4 mS	12 mS	40 mS
	500 Ω	20 µS	200 µS	2 mS	6 mS	20 mS
	1.25 kΩ	8 µS	80 µS	800 µS	2.4 mS	8 mS
	2.5 kΩ	4 µS	40 µS	400 µS	1.2 mS	4 mS
	5.0 kΩ	2 µS	20 µS	200 µS	600 µS	2 mS
	12.5 kΩ	800 nS	8 µS	80 µS	240 µS	800 µS
	25 kΩ	400 nS	4 µS	40 µS	120 µS	400 µS
	50 kΩ	200 nS	2 µS	20 µS	60 µS	200 µS
	125 kΩ	80 nS	800 nS	8 µS	24 µS	80 µS
	250 kΩ	40 nS	400 nS	4 µS	12 µS	40 µS
	∞ Ω	0	0	0	0	0

4.1.1 Calculation examples

Example 1 of a cell constant that is listed in the table

Given: K = 0.1

Measuring range = 0 to 500 µS/cm

Selected: Display = 400 µS
R = 250 Ω

Example 2 of a cell constant that is *not* listed in the table

If you cannot find the cell constant for your transmitter in the table, you can also use the following formula to carry out a test:

$$X = \frac{K}{R}$$

X = conductance in S/cm
K = cell constant in 1/cm
R = resistance value in Ω

Given: K = 2
Measuring range = 0 to 2 mS/cm

Calculation of the smallest test resistance value:

$$R_{min} = \frac{K}{\text{Measuring range}} = \frac{2}{2\ \text{mS/cm}} = 1000\ \Omega$$

Selected: 1.25 kΩ≙ display 1.6 mS/cm

4 Operation

4.2 Testing the input and temperature input of a transmitter for conductive conductivity

4.2.1 Transmitter settings

If you also want to test the temperature input of the transmitter, you must apply the following pre-settings:

1. Configure the temperature input of the transmitter to "Pt100".
2. Set the reference temperature to 25 °C.

4.2.2 Settings and steps for operating the simulator

1. Using the connecting cable, connect the simulator to the transmitter for conductive conductivity (1).
2. Set the simulator selection switch to "∞Ω" (2).
   The transmitter must display 0 +3 digits
3. Set the simulator temperature selection switch to 25 °C (3).
4. Switch off the transmitter's temperature compensation (temperature coefficient T_C = 0 %/K)
5. Make a note of cell constant K and the measuring range from the transmitter's nameplate.
6. Determine the right simulator switch position for your transmitter by referring to the table on page 8 and the method used in example 1 on page 8.

   If the cell constant for your transmitter is not listed in the table, you can determine the right switch position by using example 2 on page 9.
7. Set the simulator switch to the position that you have determined.
8. Adjust the measured value displayed on the transmitter by calibrating the cell constant – using the operating manual for the transmitter.
9. Test the linearity of the transmitter by setting a higher resistance on the simulator.
10. Make a note of the value that is displayed on the transmitter.
11. Set the simulator temperature selection switch to 75 °C (3).
12. Increase the transmitter's temperature coefficient to T_C = 2 %/K

    The display on the transmitter should now display half of the value that was displayed before the temperature coefficient was increased.
13. Conclude the testing of the transmitter.



NOTE!

The instructions in "Test the input and temperature input of a transmitter for conductive conductivity" are based on a reference temperature of 25 °C.

If the transmitter you are using has a different reference temperature, the following formula will help:

$$\varkappa = \frac{\varkappa_R}{1 + \frac{\alpha}{100\ \%} \times (\vartheta - \vartheta_R)}$$

$\varkappa$ = Conductivity after temperature change in S/cm
$\varkappa_R$ = Conductivity at reference temperature in S/cm
α = Temperature coefficient in %/K
ϑ = Temperature of the material to be measured
ϑ_R = Reference temperature

Example:

Given: K = 1.0
Measuring range = 0 to 500 µS/cm
ϑ_R = 20 °C
ϑ = 50 °C
α = 1.5 %/K

$$\varkappa = \frac{500\ \mu S}{1 + \frac{1.5\ \%/K}{100\ \%} \times (50 - 20\ °C)}$$

$\varkappa$ = 275.86 µS (Display value)

4.3 Testing switch and controller outputs

Once you have calibrated the transmitter, you can test the functionality of the switch and controller outputs. To do so, read the corresponding chapter in the operating manual for the transmitter.

5 Technical data

Simulation range	Stepped from 40 nS/cm to 800 mS/cm if cell constant K = 0.01 to 10.0
Accuracy	±1 % of set resistance value
Pt100 simulation	25 °C or 75 °C ±1 %
Connection	5-pole diode plug socket[a]
Admissible ambient temperature	0 to 50 °C
Housing	Sheet steel, powder-coated
Dimensions	130.5 × 73 × 59 mm (H x W x D)

[a] A suitable connecting cable (1.1 m long) is included in the scope of delivery of the device.



产品组别 Product group: 202711 部件名称 Component Name	产品中有害物质的名称及含量 China EEP Hazardous Substances Information					
	铅 （Pb）	汞 （Hg）	镉 （Cd）	六价铬 （Cr(VI)）	多溴联苯 （PBB）	多溴二苯醚 （PBDE）
外壳 Housing (Gehäuse)	○	○	○	○	○	○
过程连接 Process connection (Prozessanschluss)	X	○	○	○	○	○
螺母 Nuts (Mutter)	X	○	○	○	○	○
螺栓 Screw (Schraube)	○	○	○	○	○	○

本表格依据SJ/T 11364的规定编制。
This table is prepared in accordance with the provisions SJ/T 11364.
○：表示该有害物质在该部件所有均质材料中的含量均在GB/T 26572规定的限量要求以下。
Indicate the hazardous substances in all homogeneous materials' for the part is below the limit of the GB/T 26572.

×：表示该有害物质至少在该部件的某一均质材料中的含量超出GB/T 26572规定的限量要求。
Indicate the hazardous substances in at least one homogeneous materials' of the part is exceeded the limit of the GB/T 26572.

JUMO GmbH & Co. KG
Street address:
Moritz-Juchheim-Straße 1
36039 Fulda, Germany
Delivery address:
Mackenrodtstraße 14
36039 Fulda, Germany
Postal address:
36035 Fulda, Germany
Phone: +49 661 6003-0
Fax: +49 661 6003-607
Email: mail@jumo.net
Internet: www.jumo.net

JUMO Instrument Co. Ltd.
JUMO House
Temple Bank, Riverway
Harlow, Essex, CM20 2DY, UK
Phone: +44 1279 63 55 33
Fax: +44 1279 62 50 29
Email: sales@jumo.co.uk
Internet: www.jumo.co.uk

JUMO Process Control, Inc.
6733 Myers Road
East Syracuse, NY 13057, USA
Phone: +1 315 437 5866
Fax: +1 315 437 5860
Email: info.us@jumo.net
Internet: www.jumousa.com