JUMO ecoLine NTU

Optical sensor for turbidity measurements



Operating Manual

20267000T90Z001K000

V2.00/EN/00614750/2025-08-18

Table of contents

1 Introduction 5

1.1 Safety information 5
1.2 Features 6
1.3 Areas of application 6
1.4 Design 7
1.5 Measuring principle 7
1.6 Influential factors in turbidity measurement 8
1.6.1 Extraneous light 8
1.6.2 Scattered light from container or fitting walls 8
1.6.3 Homogeneity of the measurement medium 8
1.6.4 Gas bubbles in the measurement medium 8

2 Identifying the device version 9

2.1 Nameplate 9
2.2 Order details 10
2.3 Scope of delivery 11
2.4 Accessories 11

3 Mounting 13

3.1 Mounting site and environmental conditions 13
3.2 Sensor fittings 14
3.2.1 Suspended fitting 14
3.2.2 Immersion fitting 16
3.2.3 Flow fitting 18
3.3 Insertion in fittings 19
3.3.1 Insertion of the sensor in the suspended or immersion fitting 19
3.3.2 Insertion of the sensor into the PVC flow fitting 21
3.4 Setup of a measuring point with support pillar 23
3.5 Sensor dimensions 25

4 Electrical connection 27

4.1 Sensor connecting cable 27
4.2 Connection examples 28
4.2.1 Connection to the display unit with JUMO AQUIS 500 RS controller 28

5 Startup and maintenance 29

5.1 Initial startup 29
5.2 Calibration 30
5.2.1 Preparatory work 30
5.2.2 Two-point calibration 30
5.3 Calibration interval 30
5.4 Maintenance 30

Table of contents

6 Technical data 31

6.1 Specifications 31
6.2 Interfaces 31
6.3 Electrical data 31
6.4 Housing 32
6.5 Display unit / controller 32

1.1 Safety information

General

This manual contains information that must be observed in the interest of your own safety and to avoid material damage. This information is supported by symbols which are used in this manual as indicated.

Please read this manual before starting up the device. Store this manual in a place that is accessible to all users at all times.

If difficulties occur during startup, please do not intervene in any way that could jeopardize your warranty rights!

Warning symbols



CAUTION!

This symbol in connection with the signal word indicates that **material damage or data loss** will occur if the respective precautionary measures are not taken.

Note symbols



NOTE!

This symbol refers to **important information** about the product, its handling, or additional benefits.

1 Introduction

1.2 Features

The turbidity measurement according to DIN EN ISO 7027 is a tried and tested method for monitoring waters with low to strong turbidity.

The measuring principle of the JUMO ecoLine NTU turbidity sensor is based on an infrared light measurement according to the 90° scattered light method. Thanks to the light measurement at a wavelength of 880 nm and the wide measuring range of 0 to 4,000 NTU, the sensor can be used in an array of water and wastewater treatment applications, e.g. for monitoring the water quality, detecting filter leaks, and for wastewater final inspection.

Apart from the turbidity value, the sensor also measures the medium temperature.

The JUMO ecoLine NTU stores its calibration data and history directly in the sensor electronics. This means that it can be used quickly anywhere without the need for constant recalibration.

The sensor is characterized by its slim and robust design.

Suitable fittings are required for the installation of the sensor, e.g. in order to prevent the influence of extraneous light and any possibly resulting measurement errors. Corresponding immersion, suspended, and flow fittings are available.

1.3 Areas of application

The JUMO ecoLine NTU is particularly well-suited to the following areas of application:

- Drinking water treatment
- Water protection
- Fish farming companies
- Municipal and industrial sewage treatment plants
- Process engineering plants
- Paper industry

Typical turbidity values, based on examples

Liquid	Range of typical turbidity values (NTU)
Spring water	0.05 to 10
Sewage treatment plant drainage	2 to 40
Wastewater (untreated)	70 to 2000
White water (paper industry)	60 to 800
Formazine	4000

NOTE!

The sensor is not suitable for measuring the quality of drinking water (measuring ranges < 1 NTU).

1.4 Design

The basic design of the optical sensor is as shown below:

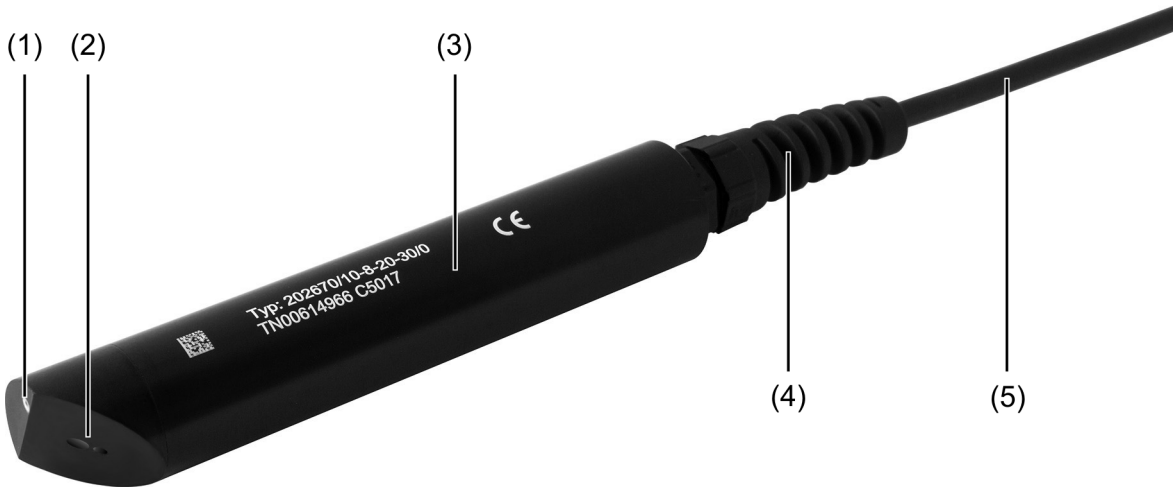

(1) Temperature sensor
(2) Sensor head with optical windows
(3) Sensor body with measurement electronics
(4) Cable sleeve with strain relief
(5) Securely connected connecting cable

1.5 Measuring principle

According to DIN EN 27027, turbidity is the reduction in the transparency of a liquid, caused by the presence of undissolved substances. The suspended and undissolved particles present in a turbid liquid absorb and reflect the light transmitted by the sensor.

The turbidity measurement of the JUMO ecoLine NTU sensor is carried out according to the measurement method defined in DIN EN ISO 7027, which measures 90° scattered light in the infrared range.

Firstly, infrared light is transmitted by the sensor. The particles in the measurement medium scatter this light. The proportion of the light that is scatted at a 90° angle is detected by the sensor receiver and then evaluated as a measurement of the turbidity.

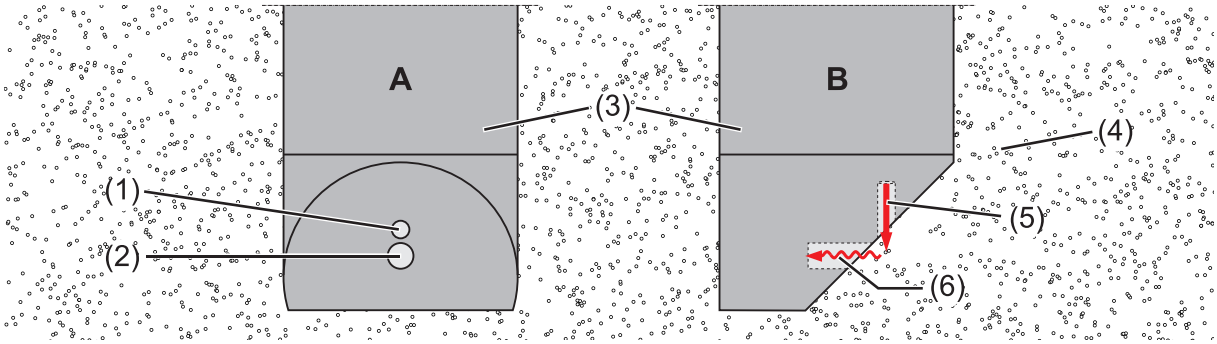

(1) Optical window with infrared transmitter
(2) Optical window with scattered-light detector
(3) Turbidity sensor, front view (**A**) and side view (**B**)
(4) Measurement medium with undissolved particles
(5) Transmitted infrared light
(6) Detection of the scattered light

1.6 Influential factors in turbidity measurement

1.6.1 Extraneous light

The turbidity measurement may be influenced by extraneous light.

The intelligent measurement and evaluation technology of the sensor detects the influence of extraneous light and, in such a case, outputs an error signal to the evaluation unit.

NOTE!

It is necessary to ensure that the sensor is used in as dark a measuring environment as possible.

1.6.2 Scattered light from container or fitting walls

The walls of the container or the fittings may cause the light transmitted by the sensor to be reflected back, which affects the accuracy of the turbidity measurement. A minimum clearance of **25 mm** between the optical windows of the sensor and the wall of the container or of a **plastic** fitting should therefore be maintained as a minimum.

If **stainless steel fittings** are being used, the minimum clearance should be **60 mm**.

NOTE!

The installer or operator of the plant is responsible for ensuring that no scattered light from container or fitting walls distorts the measurement results, by observing the above-mentioned minimum clearances.

1.6.3 Homogeneity of the measurement medium

Inhomogeneous concentrations of undissolved particles in the measurement medium may influence the measurement.

NOTE!

It is necessary to ensure that the homogeneity of the measurement medium is guaranteed by mixing the medium sufficiently.

1.6.4 Gas bubbles in the measurement medium

Gas bubbles, too, behave like particles during turbidity measurements: they scatter light and so can seriously distort the measurement result.

NOTE!

It is necessary to ensure that the measurement medium is free from gas bubbles.

2.1 Nameplate

Position

The nameplate is affixed on the upper side of the cardboard box in which the sensor is packaged.



Contents

The nameplate contains important information. This includes:

Description	Designation on the nameplate	Example
Device type	Type	202670/10-8-20-30/0
Fabrication number	F-No.	007807590101416C5017
Part no.	PN	00614966

The information regarding the device type and part no. is also provided in a laser engraving on the sensor case and the fabrication number is indicated on the connecting cable sheath.



Device type (type)

Compare the specifications on the nameplate with your order documents. The order code in chapter 2.2 "Order details", Page 10can be used to identify the device version.

Fabrication no. (F-No.)

Among other things, the fabrication number indicates the **production date** (year/week) and the hardware version number. The figures in question are in positions 12, 13, 14, and 15 (from the left).

Example: F-No. = 0078075901**1416**C5017

The device was produced in the **16**th calendar week of 20**14**.

Part no. (PN)

The part no. clearly identifies an article in the catalog. It is important for communication between the customer and the sales department.

2 Identifying the device version

2.2 Order details

	(1)	**Basic type**
202670		JUMO ecoLine NTU
		Optical Sensor for Turbidity Measurements
	(2)	**Basic type extension**
10		Standard, 0 to 4000 NTU
	(3)	**Version**
8		Standard with default settings
	(4)	**Electrical connection**
20		Permanent cable
	(5)	**Length of permanent cable**
10		10 m
30		30 m
	(6)	**Extra codes**
0		None

	(1)		(2)		(3)		(4)		(5)		(6)
Order code		/		-		-		-		/	
Order example	202670	/	10	-	8	-	20	-	30	/	0

2.3 Scope of delivery

Sensor with the ordered cable version
Operating manual B 202670.0
Calibration certificate

2.4 Accessories

(Delivery within 10 working days after receipt of order)

Fittings

Type	Part no.
Suspended fitting for type 202670/..., PVC, total length 1,549 mm	00616716
Immersion fitting for type 202670/..., PVC, total length 3,106 mm	00616717
Flow fitting for type 202670/..., PVC, angled seat	00616715

Display unit / controller

Type	Part no.
JUMO AQUIS 500 RS, type 202569/...	See data sheet 202569

Accessories for AQUIS 500 RS

Type	Part no.
Support pillar with pedestal base, cantilever arm, and chain	00398163
Additional cross clamp for support pillar, required for attaching the immersion fitting	00605468
Pipe-mounted kit for AQUIS 500 RS	00398162
Weather protection canopy for AQUIS 500 RS	00398161
Setup program for JUMO AQUIS 500 on CD-ROM	00483602
PC interface with USB/TTL converter, for connecting the PC/laptop to the JUMO AQUIS 500 RS	00456352

2 Identifying the device version

3.1 Mounting site and environmental conditions

A suspended fitting or an immersion fitting from JUMO should preferably be used for mounting the sensor in a basin, a tank, or a container.

A JUMO flow fitting should preferably be used for mounting the sensor in the supply line for the medium being measured or in the bypass.

A mounting site for the fitting should be selected that enables easy access for any subsequent calibration. It must be ensured that support pillars and fittings are mounted securely and in a way that subjects them to no more than low levels of vibration.

Electromagnetic fields, caused by equipment such as motors and transformers, should be avoided. The ambient temperature at the mounting site and the relative humidity must correspond to the technical data.



CAUTION!

It is possible that chemicals may cause damage to the optical windows of the sensor.

A damaged optical window may cause incorrect measurement results.

▶ Any contact of the optical windows with organic solvents, strong acids and bases, hydrogen peroxide and hydrocarbons must be avoided.



CAUTION!

It is possible that mechanical influences may cause damage to the optical windows of the sensor.

A damaged optical window may cause incorrect measurement results.

▶ The optical windows should be protected from mechanical loads, such as impacts or an abrasive particle stream in the measurement medium.

3 Mounting

3.2 Sensor fittings

3.2.1 Suspended fitting

The suspended fitting is used to hold the JUMO ecoLine NTU turbidity sensor and position it at a suitable point in the measurement medium. It is designed to provide the greatest possible protection for the sensor against extraneous light and damage through mechanical influences. The fitting is suspended on a chain, enabling it to follow the movement of the medium in various directions as the water level fluctuates. The fitting is primarily used to take measurements from open channels or basins. Please note the following when planning your set-up:

- The fitting must be easily accessible to allow the sensor or the fitting itself to be maintained and cleaned regularly
- Do not allow the fitting (and thus also the sensor) to swing against and hit the basin edge
- When working with systems involving pressure and/or temperature, ensure that the fitting and sensor meet all relevant requirements
- The system designer must check that the materials in the fitting and sensor are suitable for the measurement (chemical compatibility, for instance)

Suspended fitting		
Materials	Pipe: Sensor mounting:	PVC PVC
Admissible temperature	0 to 60°C	
Pressure resistance	Up to 5 bar	
Total length	1549 mm	
Part no.	00616716	

Suspended fitting

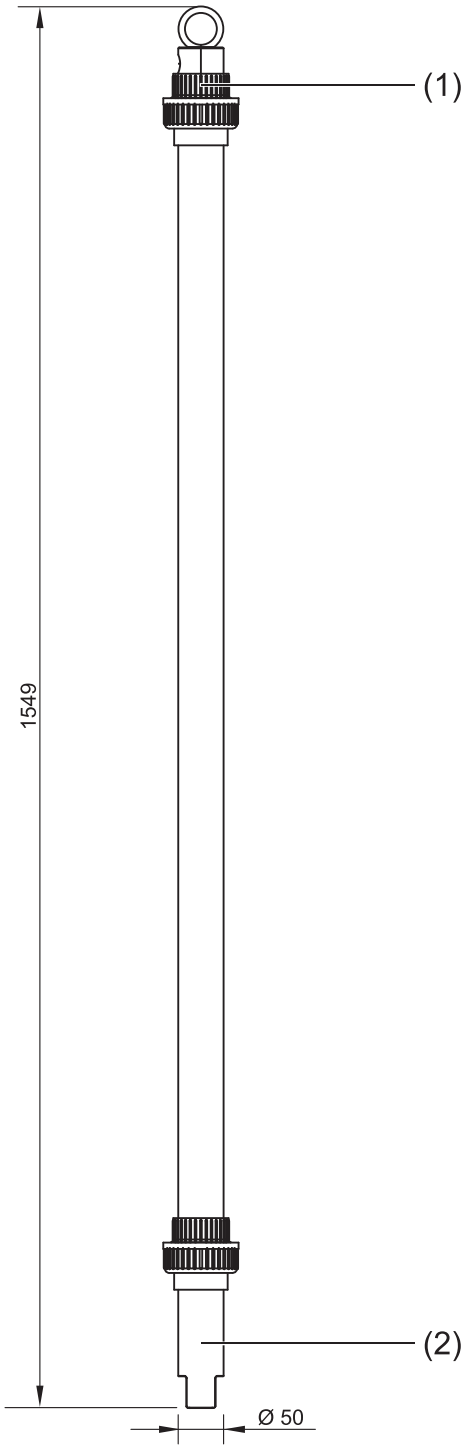

(1) Fastener with chain holder

(2) Sensor mounting

3.2.2 Immersion fitting

The immersion fitting is used to hold the JUMO ecoLine NTU turbidity sensor and position it at different immersion depths. The fitting is angled at the lower end, thus keeping rising gas bubbles as far away as possible from the sensor. It also protects the sensor against extraneous light and mechanical influences. The fitting is attached to the support pillar using a cross clamp, see chapter 3.4 "Setup of a measuring point with support pillar", Page 23.

Alongside the standard version with a total length of 3,112 mm, shorter versions are also available on request.

Please note the following when planning your set-up:

- The fitting must be easily accessible to allow the sensor or the fitting itself to be maintained and cleaned regularly
- Do not allow the fitting (and thus also the sensor) to swing against and hit the basin edge
- When working with systems involving pressure and/or temperature, ensure that the fitting and sensor meet all relevant requirements
- The system designer must check that the materials in the fitting and sensor are suitable for the measurement (chemical compatibility, for instance)

Immersion fitting		
Materials	Pipe: Sensor mounting:	PVC PVC
Admissible temperature	0 to 60°C	
Pressure resistance	Up to 5 bar	
Total length	3,106 mm	
Part no.	00616717	

Immersion fitting

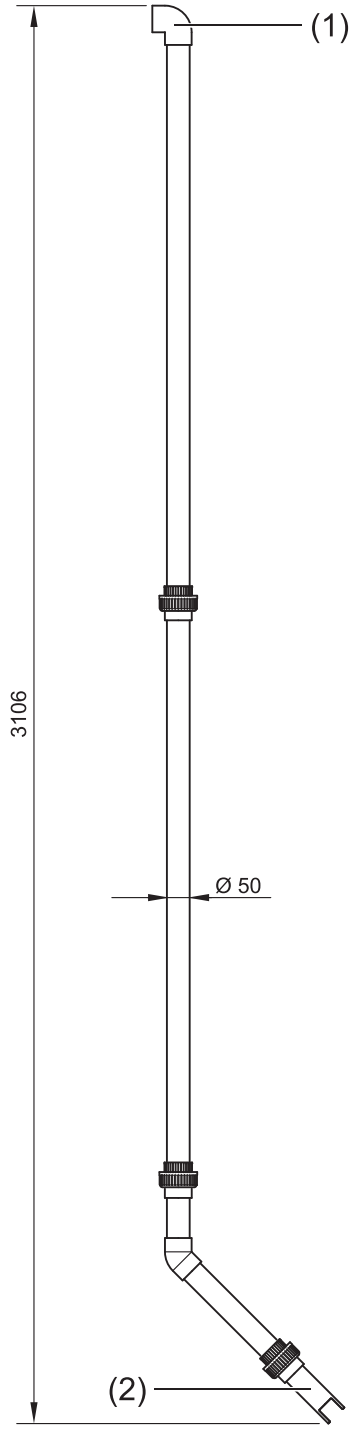

(1) Angled end piece

(2) Sensor mounting

3.2.3 Flow fitting

The flow fitting is used to hold the JUMO ecoLine NTU turbidity sensor. The fitting is mounted directly in the supply line for the medium being measured or in the bypass. Its special design type ensures the correct inflow to the sensor, thus preventing incorrect measurements.

Please note the following when planning your piping set-up:

- The fitting must be easily accessible to allow the sensor or the fitting itself to be maintained and cleaned regularly
- It is recommended that the fitting be installed in a bypass with gate valves. This variant allows the sensor to be removed without interference in the process
- When working with systems involving pressure and/or temperature, ensure that the fitting and sensor meet all relevant requirements
- The system designer must check that the materials in the fitting and sensor are suitable for the measurement (chemical compatibility, for instance)

PVC flow fitting	
Material	PVC
Admissible temperature	0 to 60°C
Pressure resistance	Up to 5 bar
Connection	Bonded sockets
Process connection	90° T-piece, DN 40
Part no.	00616715

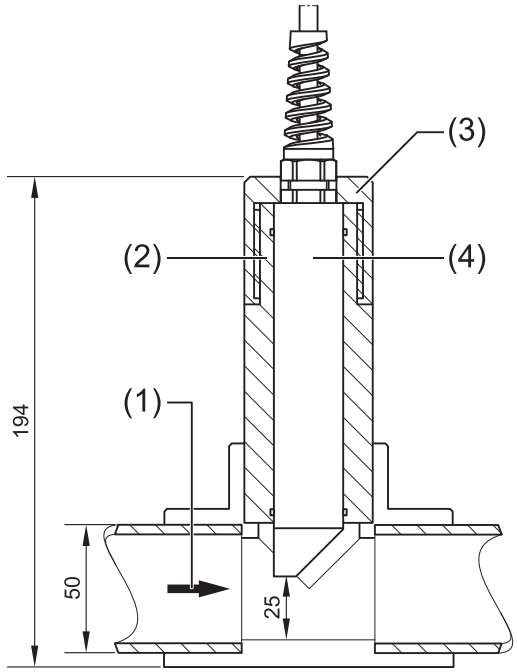

(1) Flow direction
(2) Sensor mounting
(3) Union nut
(4) JUMO ecoLine NTU sensor

3.3 Insertion in fittings

3.3.1 Insertion of the sensor in the suspended or immersion fitting

The sensor is mounted on the relevant fitting as described below, using a **sensor mounting**, which can be used both for the **suspended fitting** and for the **immersion fitting**:

For this purpose, a locking ring is first of all attached to the sensor. This will later fix the sensor in the correct position in the sensor mounting.

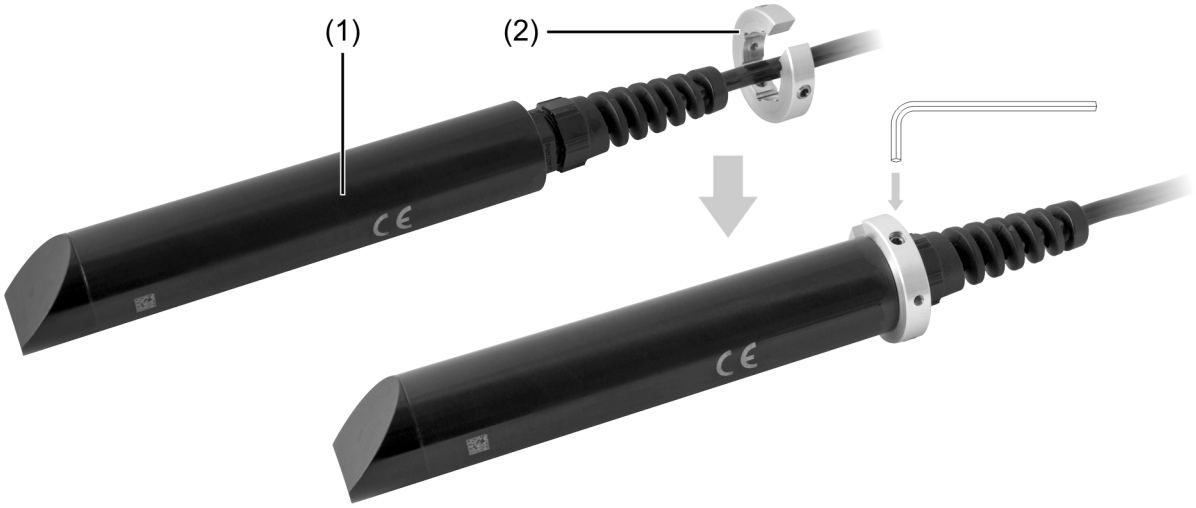

1. Feed the locking ring (2) with its opening over the connecting cable of the sensor (1).
2. Push the locking ring up to the contact surface of the sensor body.
3. Tighten the three grub screws of the locking ring with a hexagon socket screw key (af 2.5).

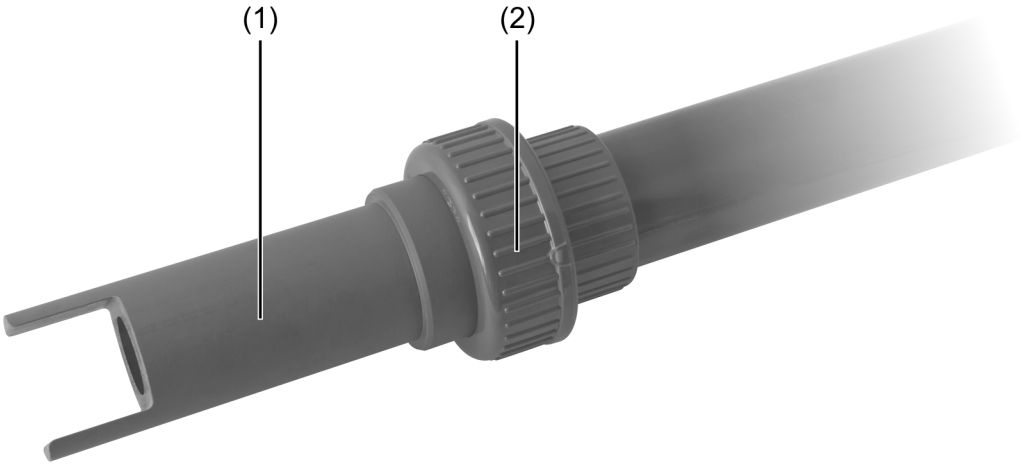

1. Unscrew the union nut (2) of the sensor holder (1) and remove the sensor holder.

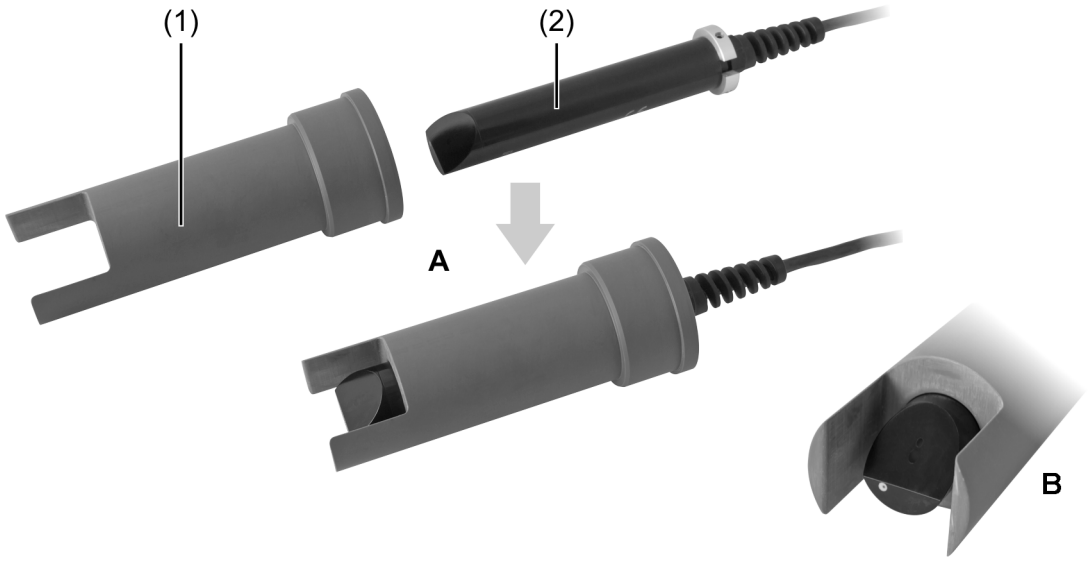

1. Insert the sensor with locking ring (2) into the sensor holder (1) as far as the stop; see Figure **A**.
2. Align the surface of the optical windows in the sensor holder by turning the sensor; see Figure **B**.

The sensor is now in the correct position in the sensor holder.

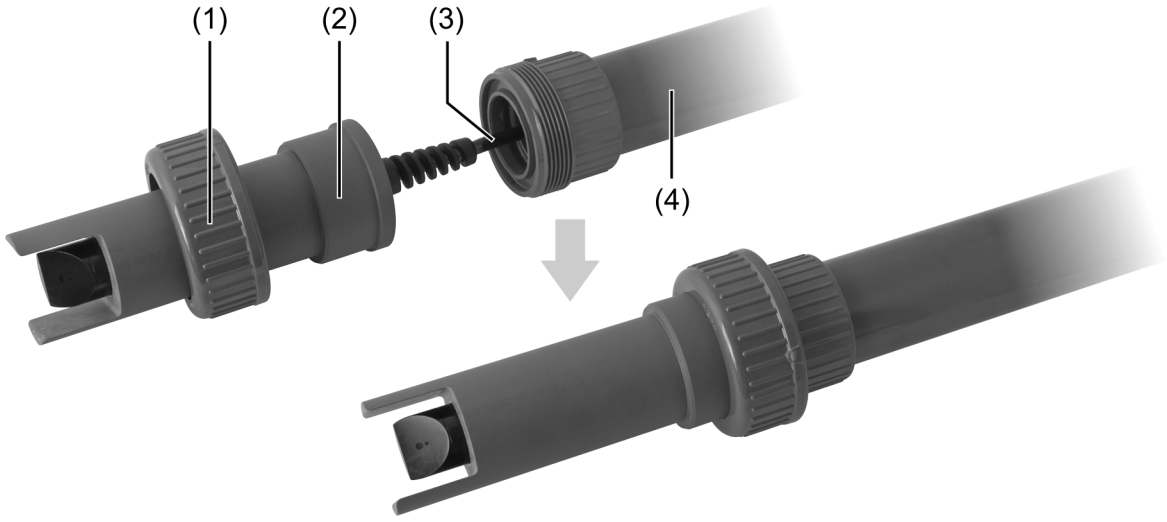

1. Push the connecting cable of the sensor (3) through the fitting (4).
2. Fasten the sensor holder with the sensor (2), as shown in the figure above, to the fitting with the help of the union nut.

The fitting can now be suspended or mounted at the operating location.

3.3.2 Insertion of the sensor into the PVC flow fitting

First of all, a locking ring is attached to the sensor. This will later fix the sensor in the correct position in the sensor mounting.

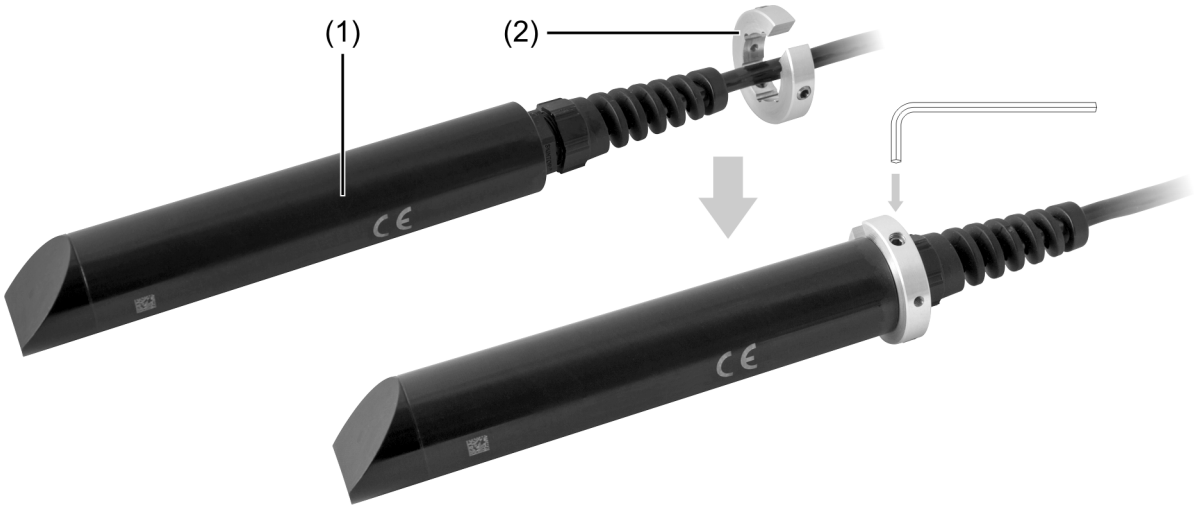

1. Feed the locking ring (2) with its opening over the connecting cable of the sensor (1).
2. Push the locking ring up to the contact surface of the sensor body.
3. Tighten the three grub screws of the locking ring with a hexagon socket screw key (af 2.5).

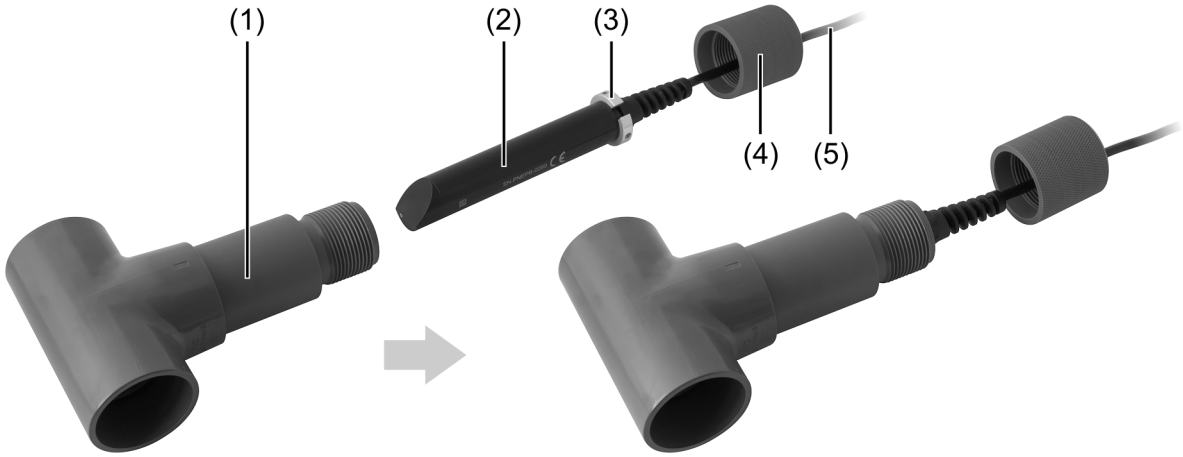

1. Guide the sensor cable (5) through the union nut on the fitting.
2. Push the sensor with the mounted locking ring into the flow fitting as far as the stop. **Pay attention to the alignment of the sensor with regard to the flow**; see the drawing under “Alignment of the sensor with regard to the flow” on the following page.
3. Screw the union nut onto the fitting as far as the stop.

3 Mounting

Alignment of the sensor with regard to the flow

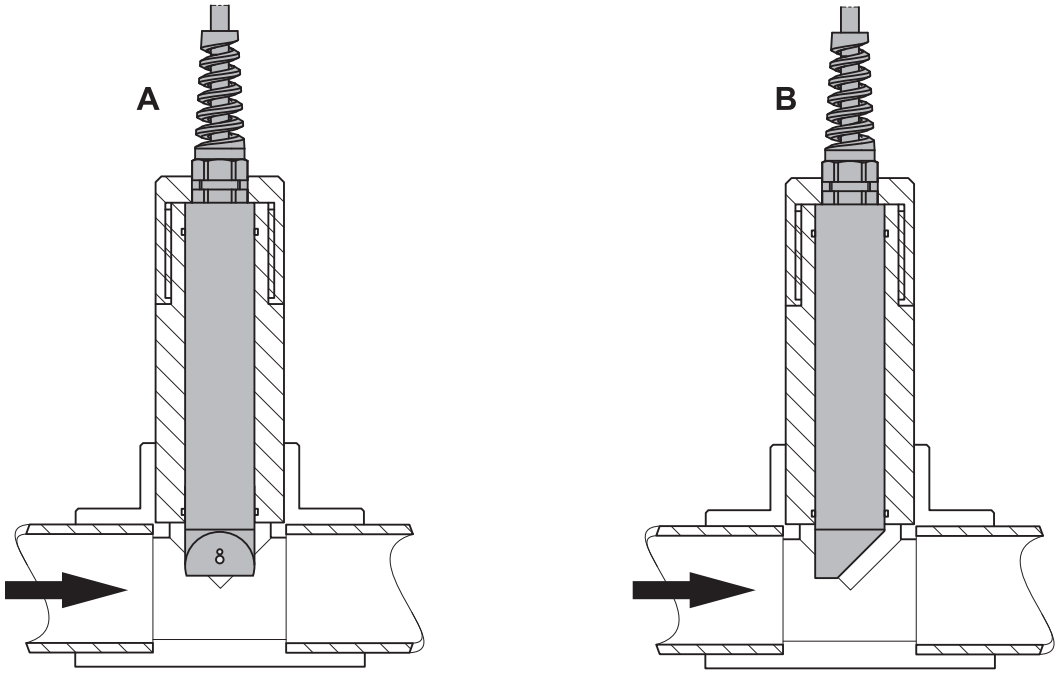

For operation in media with low turbidity, it is recommended to align the optical windows of the sensor perpendicular to the flow (arrow); see **Figure A**.

For operation in media with relatively high turbidity, the optical windows of the sensors should be turned away from the flow (arrow); see **Figure B**.

3.4 Setup of a measuring point with support pillar

The support pillar with pedestal base, cantilever arm, and chain is intended for mounting on the edge of the basin. The JUMO ecoLine NTU sensor is mounted either in a suspended fitting or an immersion fitting, as described above. It is possible to set various immersion depths and clearances from the basin edge using the cantilever arm and the chain (for suspended fitting) and the cross clamp (for immersion fitting).

The weather protection canopy protects the display unit from the influence of weathering.

Using the pipe-mounted kit, it is possible to mount the display unit to a pipe (Ø 30 to 50 mm).

Please note the following when planning your set-up:

- The fitting must be easily accessible to allow the display unit or the fitting itself to be maintained and cleaned regularly.
- Do not allow the fitting (and thus also the sensor) to swing against and hit the basin edge.
- Avoid direct sunlight on the display unit.
- The system designer must check that the materials in the fitting and sensor are suitable for the measurement (chemical compatibility, for instance).

Materials for the measuring point components.

Support pillar with pedestal base, cantilever arm, and chain		
	Material	**Part no.**
Support pillar	Stainless steel	00398163
Pedestal base	Diecast aluminum	
Cantilever arm	Stainless steel	
Chain	Stainless steel	

Pipe-mounted kit	Stainless steel	00398162
Weather protection canopy	Stainless steel	00398161
Suspended fitting	See chapter 3.2.1 "Suspended fitting", Page 14	00601881
Immersion fitting	See chapter 3.2.2 "Immersion fitting", Page 16	00605469
Cross clamp	Diecast aluminum	00605468

3 Mounting

Measuring point set-up

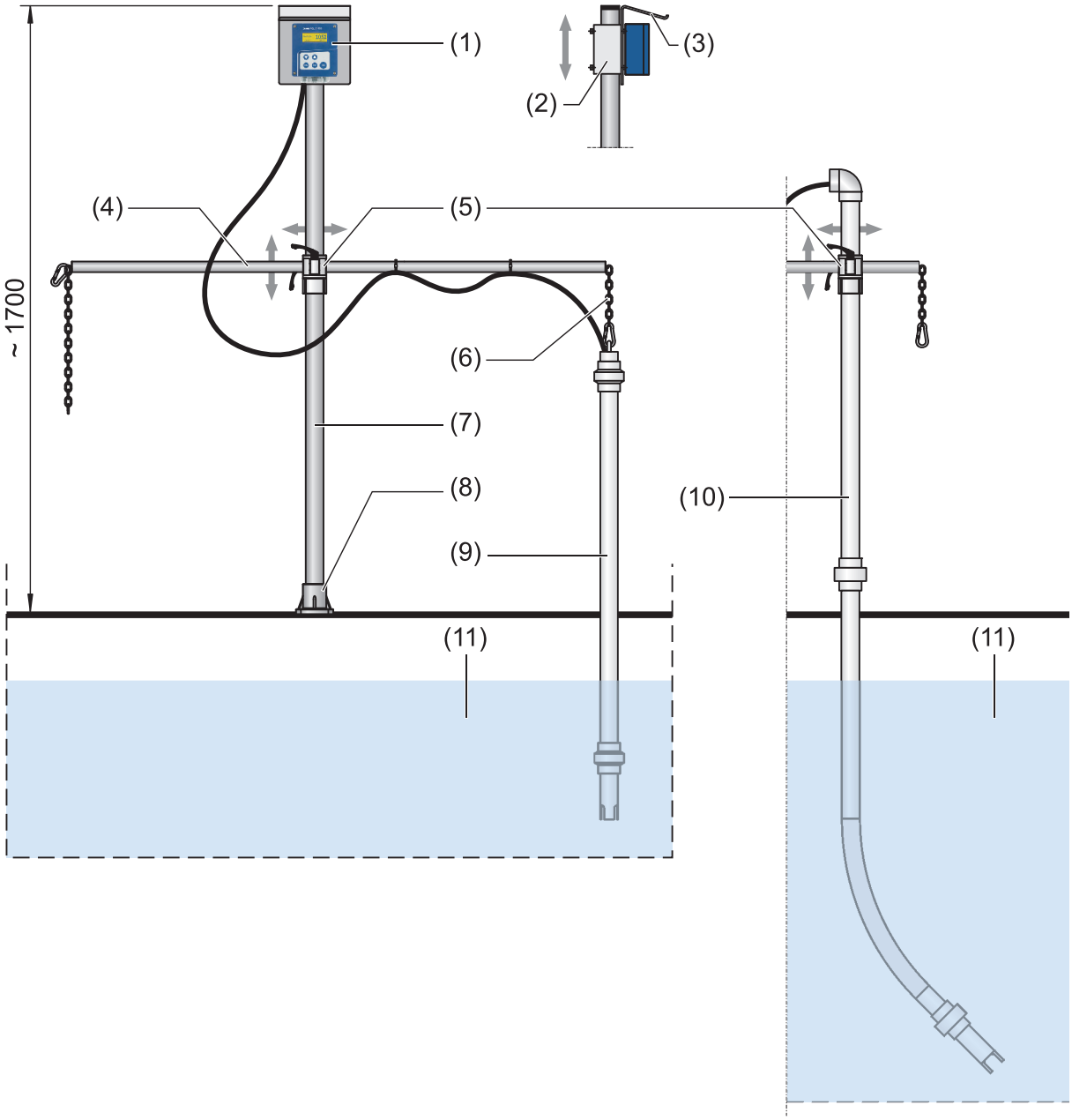

(1) JUMO AQUIS 500 RS display unit / controller
(2) Pipe-mounted kit
(3) Weather protection canopy
(4) Adjustable cantilever arm
(5) Adjustable cross clamp
(6) Chain
(7) Support pillar
(8) Pedestal base
(9) Suspended fitting
(10) Immersion fitting
(11) Basin/tank/container

3.5 Sensor dimensions

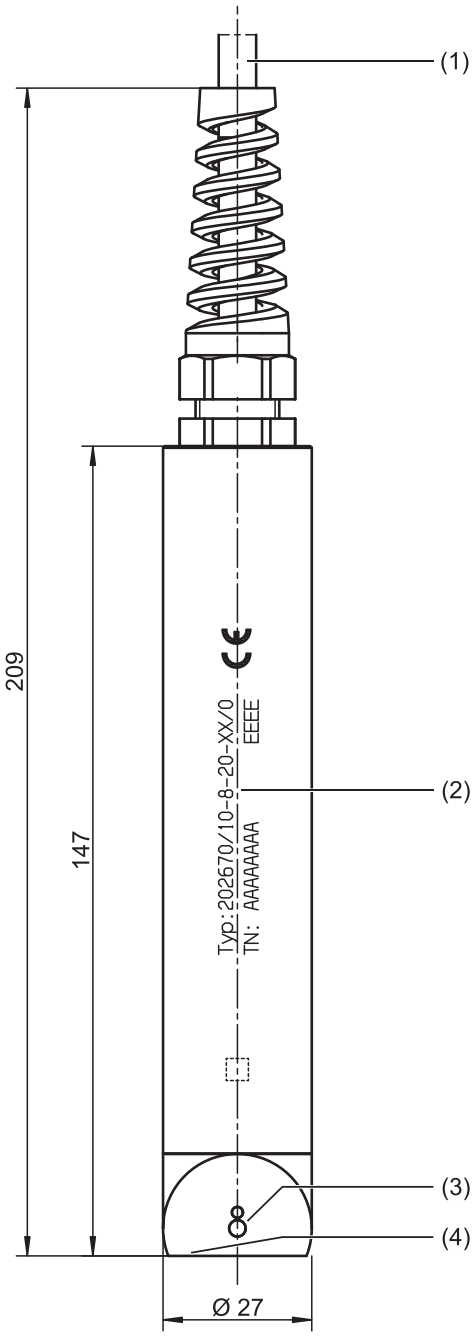

(1) RS485 connecting cable
(2) Laser engraving indicating sensor type and part no.
(3) Infrared transmitter and receiver (optical windows)
(4) Temperature sensor

3 Mounting

4.1 Sensor connecting cable

The sensor is equipped with a hardwired connecting cable, available in a length of either 10 m or 30 m. The electrical connection with the display unit / controller is established without the need for soldering, via four lines with ferrules.

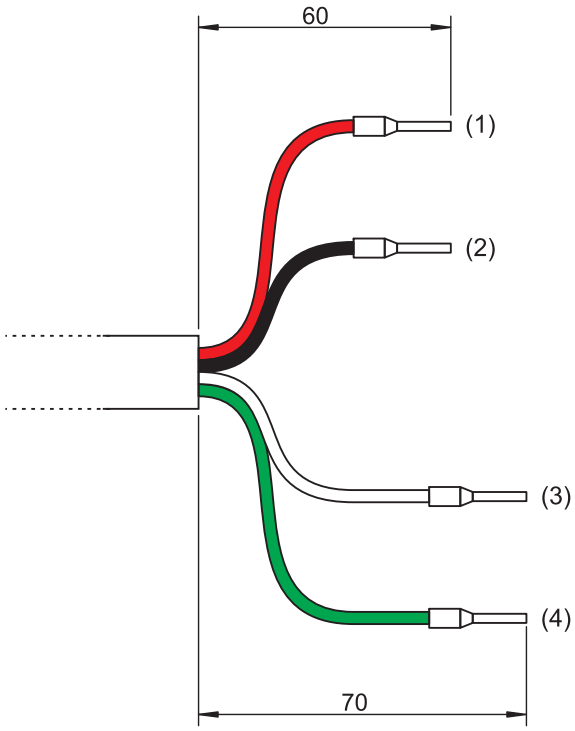

(1)	Voltage supply + (red)	(3)	RS485 + (white)
(2)	Voltage supply - (black)	(4)	RS485 - (green)

CAUTION!

Destruction of the sensor due to reverse voltage or overvoltage.

A reverse voltage of the voltage supply when making the connection, or the connection of the sensor to an excessive voltage supply (> 12 V) will cause the destruction of the sensor electronics.

4 Electrical connection

4.2 Connection examples

4.2.1 Connection to the display unit with JUMO AQUIS 500 RS controller

NOTE!

The startup of the JUMO ecoLine NTU sensor on the JUMO AQUIS 500 RS display unit with controller is described in detail in the operating manual B 202569.0.

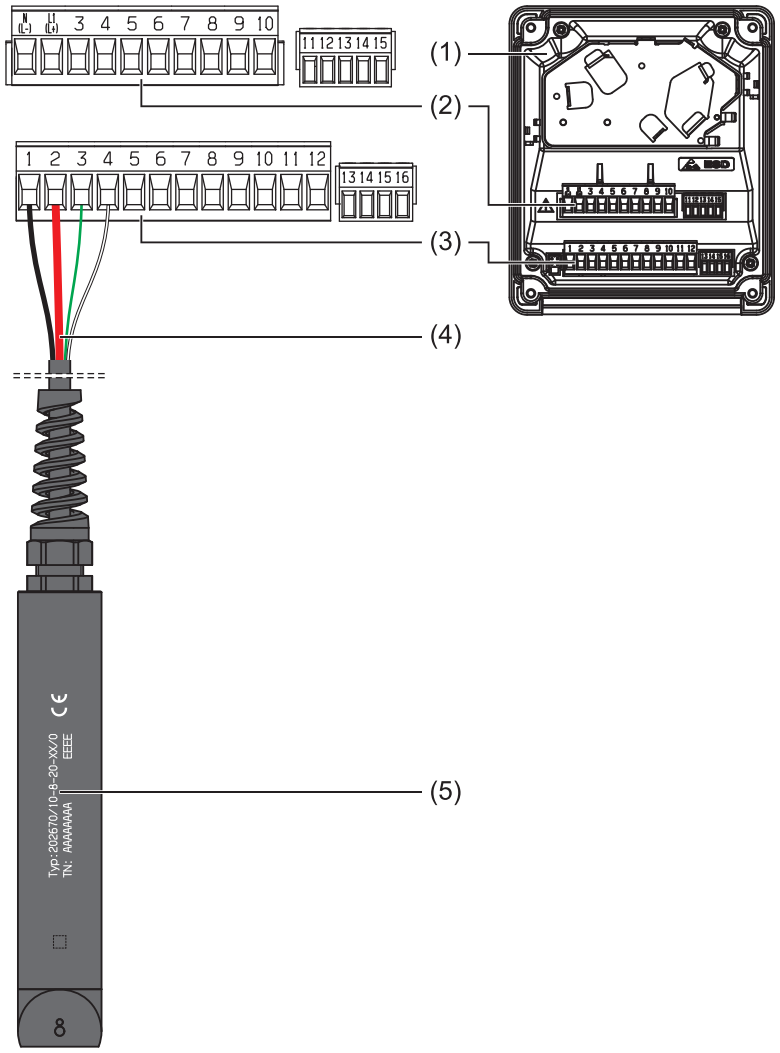

(1) JUMO AQUIS 500 RS display unit / controller
(2) Terminal block 1
(3) Terminal block 2
(4) Sensor connecting cable
(5) JUMO ecoLine NTU (optical sensor for turbidity measurements) with permanently wired 4-conductor connecting cable

Terminal assignment for the sensor connecting cable on terminal strip 2		
Wire color	Function	Terminal
Black	GND	1
Red	DC 5 V +	2
Green	RS485 -	3
White	RS485 +	4

5.1 Initial startup

Once the sensor has been inserted into a fitting, the electrical connection has been established to a display unit, and the parameterization has been carried out on the display unit, the sensor is ready for start-up.

NOTE!

The sensor will have been checked to ensure correct function and calibrated at the production plant, and it is delivered ready for operation. It is therefore not necessary to carry out calibration prior to initial start-up.

The following points should be taken into account when carrying out initial startup on the sensor:

- Although it is not strictly required according to the measurement principle, a turbulent incoming flow is advisable to facilitate self-cleaning of the sensor.
- Air bubbles in the measurement medium should be avoided to ensure ideal, error-free measurements.
- The nature of the measurement medium should be as homogeneous as possible.
- The sensor should be positioned at a position in the measurement medium that is protected against extraneous light. This is particularly important if the working range of the measurement is between 0 and 20 NTU.

CAUTION!

It is possible that chemicals may cause damage to the optical windows of the sensor.

A damaged optical window may cause incorrect measurement results.

▶ Any contact of the optical windows with organic solvents, strong acids and bases, hydrogen peroxide and hydrocarbons must be avoided.

CAUTION!

Damage to the optical windows of the sensor due to mechanical influences.

A damaged optical window may cause incorrect measurement results.

▶ The optical windows should be protected from mechanical loads, such as impacts or an abrasive particle stream in the measurement medium.

5 Startup and maintenance

5.2 Calibration

The method of **two-point calibration for each of the four measuring ranges** is available for calibrating the sensor.

NOTE!

The process of calibrating the sensor with the JUMO AQUIS 500 RS display unit / controller is described in detail in the operating manual B 202569.0.

5.2.1 Preparatory work

The sensor should be rinsed with clean water before each calibration. Organic deposits left on the sensor lens, such as a biofilm or silt, may cause measurement errors. These deposits should be removed carefully with warm soapy water and a soft sponge. Never use abrasive agents (e.g. scouring sponge).

Calcium deposits can be removed by submersing the sensors in a diluted hydrochloric acid solution **(concentration max. 5 %)** for several minutes.

5.2.2 Two-point calibration

With two-point calibration, the zero point and slope of the sensor are calibrated. It is carried out as follows:

- Selection of the measuring range to be calibrated.
- Immersion of the sensor in distilled water in order to determine the zero point (0 NTU).
- Determining the slope of the sensor by positioning it in a formazine reference solution according to ISO 7027 with a known turbidity value.

NOTE!

If the sensor is to be operated in the automatic measuring range switchover mode, all **4 measuring ranges** must be calibrated.

5.3 Calibration interval

The sensor is calibrated ex works, meaning that no calibration is required before initial startup. During operation, the sensor should be calibrated if the measured values begin to drift.

If the zero point is moved, a complete two-point calibration must be carried out.

5.4 Maintenance

The following points should be taken into account during ongoing operation of the sensor:

- The sensor must always be kept clean, particularly in the area around the optical windows. The presence of deposits on the optical windows may lead to measurement errors.
- Deposits such as a biofilm or silt should be removed carefully with warm soapy water and a soft sponge. Never use abrasive agents (e.g. scouring sponge).
- If the sensor is put out of operation, it should be rinsed ready for storage, and the provided protective cap should be fitted.

6.1 Specifications

Measuring principle	Optical, nephelometric turbidity measurement with 90° scattered light according to DIN EN ISO 7027
Measurands	Turbidity Temperature
Measuring ranges	0 to 4,000 NTU in a choice of 4 measuring ranges as well as automatic measuring range detection: • 0.00 to 50.00 NTU • 0.0 to 200.0 NTU • 0 to 1,000 NTU • 0 to 4,000 NTU
Resolution	0.01 to 1, depending on measuring range
Accuracy	< 5 % from NTU measured value
Max. sampling rate for measured values	1 Hz
Temperature range	0 to +50°C
Pressure range	Up to 5 bar
Storage temperature	-10 to +60°C

6.2 Interfaces

Signal interface	RS485 interface with Modbus RTU protocol[a]

[a] Only in connection with suitable Modbus master devices, see chapter “Display unit / controller”.

6.3 Electrical data

Voltage supply	5 to 12 V
Current consumption	
Standby	40 mA
RS 485 on average	820 µA (at 1 measurement/s)
Starting current peak	500 mA, warm-up time 100 ms
Connection	4-conductor shielded cable, open conductor ends with ferrules
Electromagnetic compatibility	Acc. to EN 61326-1
Interference emission	Class A
Interference immunity	Industrial requirements

6 Technical data

6.4 Housing

Dimensions	Ø 27 mm × 147 mm (sensor case without cable)
Weight	720 g (sensor including 10 m cable) 1,850 g (sensor including 30 m cable)
Length of permanent cable	10 m, 30 m
Materials	Sensor case: PVC, POM-C Optical windows: PMMA Connecting cable: Polyamide
Protection type	IP68

6.5 Display unit / controller

	JUMO AQUIS 500 RS display unit / controller, type 202569/... For this, see data sheet 202569

JUMO GmbH & Co. KG
Street address:
Moritz-Juchheim-Straße 1
36039 Fulda, Germany
Delivery address:
Mackenrodtstraße 14
36039 Fulda, Germany
Postal address:
36035 Fulda, Germany
Phone: +49 661 6003-0
Fax: +49 661 6003-607
Email: mail@jumo.net
Internet: www.jumo.net

JUMO UK LTD
JUMO House
Temple Bank, Riverway
Harlow, Essex, CM20 2DY, UK
Phone: +44 1279 63 55 33
Fax: +44 1279 62 50 29
Email: sales@jumo.co.uk
Internet: www.jumo.co.uk

JUMO Process Control, Inc.
6724 Joy Road
East Syracuse, NY 13057, USA
Phone: +1 315 437 5866
Fax: +1 315 437 5860
Email: info.us@jumo.net
Internet: www.jumousa.com

