JUMO tecLine H_2O_2 and PAA

Sensors for hydrogen peroxide (H_2O_2) and peracetic acid (PAA) Type 202636

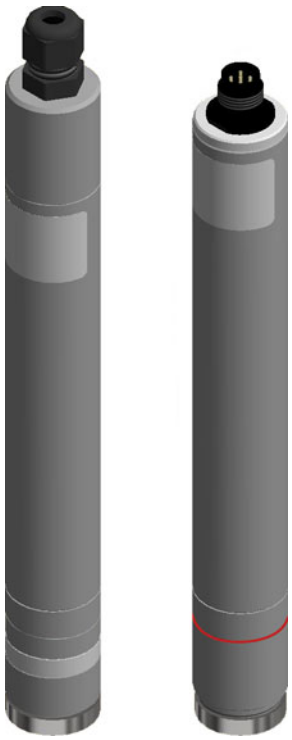

Operating Manual

20263600T90Z001K000

V3.00/EN/00585747

Contents

1 Introduction 6

1.1 Safety information 6
1.1.1 General Information 6
1.1.2 Warning symbols 6
1.1.3 Note symbols 6

2 Description 7

2.1 Areas of application 7
2.2 Design 7
2.3 Output signal 7
2.4 Suitable indicators/transmitters/controllers 8
2.5 Sensor details 9
2.6 Important information for use 11
2.6.1 Notes for all types 11
2.6.2 Types with valve opening in the membrane cap (202636/55-45, -60, -70, -75 and 202636/60-60, -70, -80) 11

3 Identifying the device version 13

3.1 Nameplate 13
3.2 Order details 14
3.3 Scope of delivery 14
3.4 Accessories 15

4 Mounting 17

4.1 Important information 17
4.2 Combination fitting (type 202811/10) 19
4.2.1 Mounting the combination fitting 19
4.2.2 Installing the sensor 20
4.3 Flow fitting for membrane-covered sensors (type 202811/30) 22
4.3.1 Mounting the fitting 22
4.3.2 Installing the sensor 23
4.4 Flow monitor for disinfection measurands (type 202811/20) 24
4.4.1 Mounting the flow monitor 24

5 Electrical connection 25

5.1 Sensors with an output signal of 4 to 20 mA (types 202636/55 and /60) 25
5.1.1 General requirements 25
5.1.2 Terminal assignment 25
5.1.3 Connection 25
5.2 Sensors with a digital interface output signal (types 202636/75 and /80) 27
5.2.1 General requirements 27
5.2.2 Terminal assignment 27
5.3 Flow monitoring (combination fitting and flow monitor) 27

Contents

5.3.1 Terminal assignment . . . 27
5.4 Combination fitting temperature probe . . . 27
5.4.1 Terminal assignment . . . 27
5.5 Example of a measuring section with the sensor type 202636/55 . . . 28
5.5.1 General information . . . 28
5.5.2 Connection example . . . 28

6 Startup . . . 29

6.1 Important notes for screwing the membrane cap on and off . . . 29
6.2 Initial filling and installation of the membrane cap . . . 30
6.2.1 Types with valve opening in the membrane cap (202636/55-45, -60, -70, -75 and 202636/60-60, -70, -80) . . . 30
6.2.2 Types with an internal pressure compensation system (202636/55-81, /60-81, /60-85, /75 and /80) . . . 33
6.3 Minimum inflow . . . 35
6.3.1 Adjusting the minimum inflow (combination fitting and flow monitor) . . . 35
6.4 Settling time . . . 35

7 Maintenance . . . 36

7.1 Replacing the electrolyte . . . 36
7.1.1 Types with valve opening in the membrane cap (202636/55-45, -60, -70, -75 and 202636/60-60, -70, -80) . . . 36
7.1.2 Types with an internal pressure compensation system (202636/55-81, /60-81, /60-85, /75 and /80) . . . 39
7.2 Replacing the membrane cap . . . 42
7.2.1 Types with valve opening in the membrane cap (202636/55-45, -60, -70, -75 and 202636/60-60, -70, -80) . . . 42
7.2.2 Types with an internal pressure compensation system (202636/55-81, /60-81, /60-85, /75 and /80) . . . 45
7.3 Storage . . . 48
7.3.1 Types with valve opening in the membrane cap (202636/55-45, -60, -70, -75 and 202636/60-60, -70, -80) . . . 48
7.3.2 Types with an internal pressure compensation system (202636/55-81, /60-81, /60-85, /75 and /80) . . . 48
7.4 Consumable material . . . 49

8 Calibration . . . 50

8.1 General information . . . 50
8.2 Calibrating with an indicator/controller . . . 50

9 Overcoming errors and malfunctions . . . 51

9.1 General troubleshooting . . . 51
9.2 Specific troubleshooting on the sensor . . . 53

9.2.1 Testing the leak-tightness of the membrane cap 53
9.2.2 Electronics test 53
9.2.3 Testing the zero point 53
9.2.4 Measurement signal test 54
9.2.5 Testing the environment 54

10 Technical data 55

10.1 Sensors for peracetic acid (PAA) 55
10.2 Sensors for hydrogen peroxide (H_2O_2) 56

11 Annex 58

11.1 Suitable titration methods 58

12 China RoHS 60

1 Introduction

1.1 Safety information

1.1.1 General Information

This manual contains information that must be observed in the interest of your own safety and to avoid material damage. This information is supported by symbols which are used in this manual as indicated.

Please read this manual before starting up the device. Store this manual in a place that is accessible to all users at all times.

If difficulties occur during startup, please do not intervene in any way that could jeopardize your warranty rights!

1.1.2 Warning symbols



WARNING!

This symbol in connection with the signal word indicates that **personal injury** may occur if the respective precautionary measures are not carried out.

NOTICE

This note in connection with the signal word indicates that **material damage or data loss** will occur if the respective precautionary measures are not taken.

1.1.3 Note symbols



NOTE!

This symbol refers to **important information** about the product, its handling, or additional benefits.

2.1 Areas of application

These membrane-covered amperometric sensors are used to measure the concentration of hydrogen peroxide or peracetic acid in aqueous solutions.

Typical areas of application are galvanizing plants, the pharmaceutical field, the food and beverage industry, dairies and the chemical industry.

The sensors are partially insensitive to chemicals and surfactants, and can be used in media with almost all qualities of water.



NOTE!

Solid materials in the media clog up the membrane and prevent the sensors from working correctly.



NOTE!

Calcium oxide can block the membrane.



NOTE!

The sensors are not suitable for detecting the absence of hydrogen peroxide or peracetic acid.

2.2 Design

The sensors have a membrane-covered, amperometric two-electrode measuring system.

The working electrodes (cathodes) are made of gold (Au). The anodes, which perform the role of a combined reference and counter electrode, are made of silver (Ag) and have a silver halide (AgHal) coating.

For the measuring methods used here, hydrogen peroxide or peracetic acid diffuses through the membrane from the measurement medium and, combined with the electrolytes, triggers an electrical signal at the working electrode. This signal is proportional to the concentration of chlorine dioxide or ozone and is amplified by the electronics. The measurement signal is mainly independent of the temperature of the media thanks to integrated temperature compensation.

2.3 Output signal

As the measurement signal of the amperometric sensors is temperature-dependent, an automatic temperature compensation is carried out by an integrated NTC resistor. The recommended temperature range is 0[1] to +45 °C.

In the analog versions, the integrated sensor electronics provide a current signal of 4 to 20 mA, and in the digital versions, they provide a Modbus RTU interface signal.

Calibration is carried out in a downstream device (indicator, controller, recorder, PLC, etc.).

The sensors can be connected directly to any suitable indicators and controllers. They provide the voltage required for supplying the sensors and allow for easy calibration of the measuring systems.

[1] Prerequisite: no ice crystals in the measuring water.

2 Description

2.4 Suitable indicators/transmitters/controllers

Type	Features	Suitable sensors
JUMO AQUIS 500 AS	Single-channel (4 to 20 mA) indicating device/controller, additional temperature input, binary input, up to two analog and switching outputs	Types 202636/55 and /60 (output signal 4 to 20 mA)
JUMO AQUIS 500 RS	Single-channel (Modbus RTU) indicating device/controller, additional temperature input, binary input, up to two analog and switching outputs	Types 202636/75 and /80 (digital interface)
JUMO dTRANS AS 02	Modular multichannel transmitter/controller for standard signals, PROFIBUS-DP, RS422/485, data logger using optional boards	Types 202636/55 and /60 (output signal 4 to 20 mA)
JUMO AQUIS touch S/P	Modular multichannel measuring devices for liquid analysis with integrated controller and paperless recorder, USB host, USB device, Modbus, PROFIBUS-DP and Ethernet using optional boards	All types 202636

2.5 Sensor details

Types 202636/55-81, /60-81 and /60-85
(4 to 20 mA version)

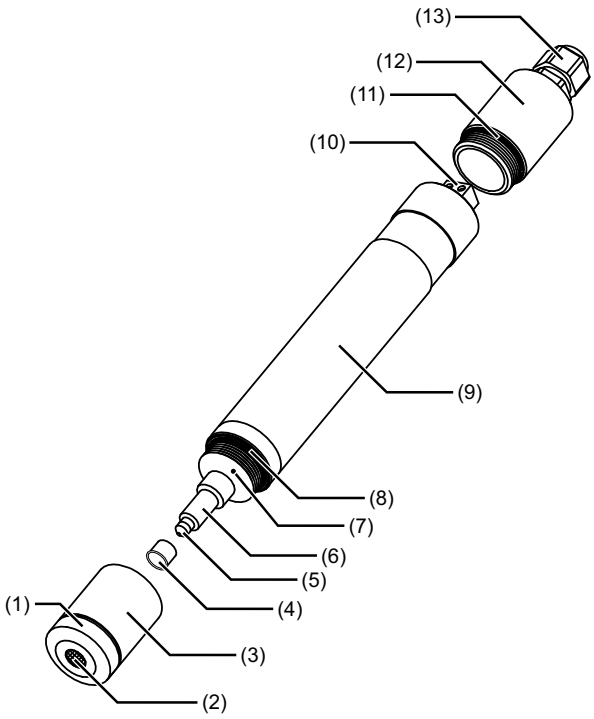

Types 202636/75 and /80
(Modbus RTU version)

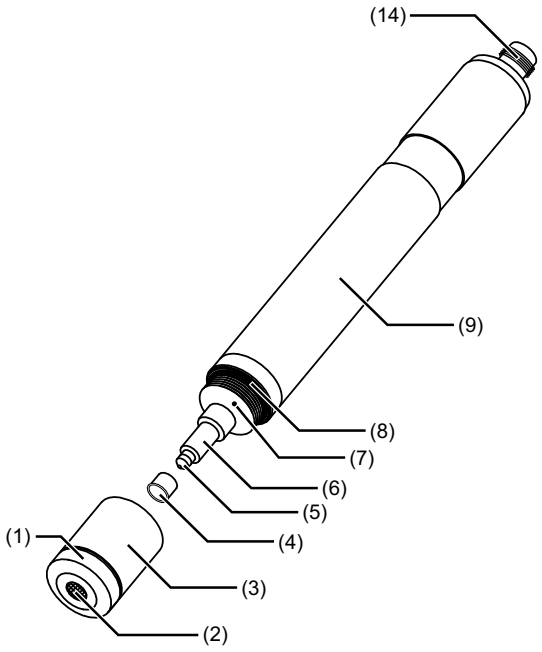

(1) Membrane holder (stainless steel)
(2) Membrane
(3) Membrane cap
(4) G-bracket
(5) Measuring electrode
(6) Electrode finger (reference electrode)
(7) Opening for pressure compensation
(8) O-ring
(9) Electrode shaft with integrated electronics
(10) Two-pin terminal for measuring cable connection
(11) O-ring
(12) Cover
(13) Pg screw connection
(14) M12 flange connector

2 Description

Types 202636/55-45, -60, -70 and -75
Types 202636/60-60, -70 and -80
(4 to 20 mA)

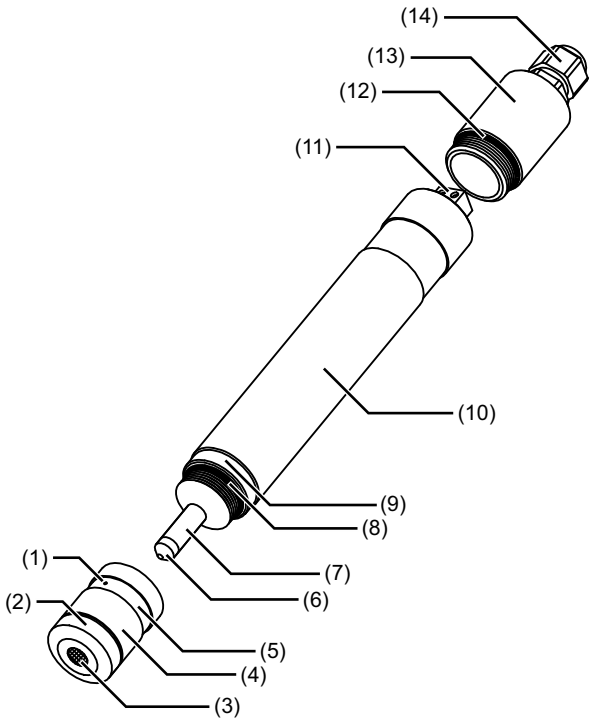

(1) Valve opening
(2) Membrane holder (stainless steel)
(3) Membrane
(4) Membrane cap
(5) Transparent cover (hose rings)
(6) Measuring electrode
(7) Electrode finger (reference electrode)
(8) O-ring
(9) Counter electrode (stainless steel)
(10) Electrode shaft with integrated electronics
(11) Two-pin terminal for measuring cable connection
(12) O-ring
(13) Cover
(14) Pg screw connection

2.6 Important information for use

2.6.1 Notes for all types

NOTICE

Unsuitable measurement media may produce incorrect measurement results.

Using the sensors to measure contaminated media (dirt particles, foreign objects, fibers, etc.) may lead to incorrect measurement results.

▶ In order to ensure error-free measurements, the measurement media must be visibly clean. A pre-filter must also be used, as required.

NOTICE

An unsuitable measuring environment may produce incorrect measurement results.

Using the sensors without the use of suitable flow fittings will lead to incorrect measurement results.

▶ In order to ensure error-free measurements, the sensors must be installed in suitable flow fittings, see chapter 4.2 "Combination fitting (type 202811/10)", page 19 or chapter 4.3 "Flow fitting for membrane-covered sensors (type 202811/30)", page 22.

NOTICE

Incorrect handling may cause damage to the membrane caps.

Screwing an unfilled membrane cap fully onto the sensor before startup may cause mechanical damage to the membrane. In addition, screwing on a filled membrane cap without placing the sensor into the measurement media can cause salt or gel residues to be deposited.

▶ Screwing on the membrane cap without then starting up the sensor should be avoided.

NOTICE

The membranes may be damaged by high pressure.

Operating the sensors with increased pressure may cause the membranes to rip.

▶ The sensors should be operated under as little pressure as possible, with the measurement media able to flow freely. If this is not possible, the sensors can be operated under a **constant** pressure of up to 1 bar (relative pressure) or 2 bar (absolute pressure). Fluctuations in pressure must be avoided.

2.6.2 Types with valve opening in the membrane cap (202636/55-45, -60, -70, -75 and 202636/60-60, -70, -80)

The measurement water must not contain any surfactants (contained in some cleaning agents and disinfectants). Surfactants may infiltrate the valve cover of the membrane cap. It can therefore no longer be guaranteed that the sensors will work correctly.

The sensors for hydrogen peroxide and peracetic acid with a digital interface and internal pressure compensation system (types 202636/75 and 202636/80) provide an alternative for measurement solutions containing surfactants.

NOTICE

Irritating substances may produce incorrect measurement results.

Using the sensors to measure media containing surfactants may lead to incorrect measurement results.

▶ In order to ensure error-free measurements, the measurement media must not contain surfactants (surface-active substances e.g. from detergents, cleaning agents or disinfectants).

NOTICE

Harmful substances may lead to incorrect measurement results and cause damage to the membrane caps.

Using the sensors to measure media containing hydrophobic substances may lead to incorrect measurement results. Hydrophobic substances can damage the membrane caps.

▶ In order to ensure error-free measurements, the measurement media must not contain hydrophobic substances (e.g. oil or grease).

3.1 Nameplate

Position

The nameplate is glued to the top of the sensor.

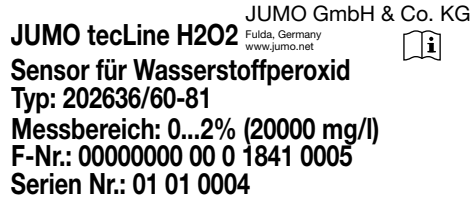

Contents

The nameplate contains important information. This includes:

Description	Designation on the nameplate	Example
Device type	Type	202636/60-81
Fabrication number	F No.	000000000001841000500

Device type (Typ)

Compare the specifications on the nameplate with your order documents. The supplied device version can be identified using the order code in chapter 3.2 "Order details", page 14.

Fabrication number (F no.)

The fabrication number provides information such as the **production date** (year/week). The figures in question are in positions 12, 13, 14, and 15 (from the left).

For example: F-No. = 000000000001**18**41**0**0005. The device was produced in 20**18** and in the **41**st week.

3 Identifying the device version

3.2 Order details

	(1)	Basic type
202636		JUMO tecLine H2O2 + PAA
		Sensors for hydrogen peroxide and peracetic acid
	(2)	**Basic type extension**
55		Sensor for peracetic acid, output signal 4 to 20 mA
60		Sensor for hydrogen peroxide, output signal 4 to 20 mA
75		Sensor for peracetic acid, digital interface output signal
80		Sensor for hydrogen peroxide, digital interface output signal
	(3)	**Measuring range**[a]
45		0 to 200 mg/l (ppm)
60		0 to 500 mg/l (ppm)
70		0 to 2000 mg/l (ppm)
75		0 to 5000 mg/l (ppm)
80		0 to 10000 mg/l (ppm)
81		0 to 20000 mg/l (ppm)
85		0 to 50000 mg/l (ppm)
95		0 to 200000 mg/l (ppm)

[a] When selecting the measuring range, please refer to the note on the slope of the sensors on page 2.

	(1)		(2)		(3)
Order code		/		-	
Order example	202636	/	60	-	81

3.3 Scope of delivery

Type 202636/55-45, -60, -70, -75	Two-wire sensor, incl. membrane cap, electrolyte, special abrasive paper for cathode cleaning, and operating manual
Type 202636/60-60, -70, -80	
Type 202636/55-81	Two-wire sensor, incl. membrane cap, electrolyte, G-bracket with tweezers, spare G-bracket with O-ring, special abrasive paper for cathode cleaning, and operating manual
Type 202636/60-81, -85	
Type 202636/75	Modbus RTU sensor, incl. membrane cap, electrolyte, G-bracket with tweezers, spare G-bracket with O-ring, special abrasive paper for cathode cleaning, and operating manual
Type 202636/80	

3.4 Accessories

Fittings

Designation	Part no.
Combination fitting for mounting several electrochemical sensors[a]	00607325
Individual fitting for mounting a membrane-covered sensor	00392611
Mounting bracket for individual fitting	00455706
Flow monitor for monitoring the minimum inflow[b]	00605507

[a] With integrated flow monitor, mini ball valve included.

[b] For flow monitoring in connection with the individual fitting.

Connecting cables for sensors with a digital interface

Designation	Part no.
1.5 m connecting cable, 5-pin M12 connector, A-coded on the ferrules	00638333
5 m connecting cable, 5-pin M12 connector, A-coded on the ferrules	00638337
10 m connecting cable, 5-pin M12 connector, A-coded on the ferrules	00638341

Suitable transmitters/controllers

Designation	Part no.
JUMO AQUIS 500 AS[a], type 202568/20-888-888-888-310-310-23/000 (for further versions, please refer to data sheet 202568) 	00528718
JUMO AQUIS 500 RS[b], type 202569/20-654-888-888-310-310-23/000 (for further versions, please refer to data sheet 202569) 	00602275
JUMO dTRANS AS 02[a], type: 202553/01-8-01-4-0-00-23/000 (fur further versions, please refer to data sheet 202553) 	00550842
JUMO AQUIS touch S/P[c]  	Refer to data sheet 202580/81

[a] For types 202636/55 and /60.

[b] For types 202636/75 and /80.

[c] For all types 202636.

3 Identifying the device version

Spare part sets and electrolytes

Sensor	**Measuring range**	**Part no. Spare parts set** (membrane cap, fine abrasive paper)	**Part no. electrolyte** (100 ml)
202636/55-45	0 to 200 mg/l	00409344	00440821
202636/55-60	0 to 500 mg/l	00409344	00440821
202636/55-70	0 to 2000 mg/l	00409344	00440821
202636/55-75	0 to 5000 mg/l	00493433	00684631
202636/55-81	0 to 20000 mg/l	00673072	00673075
202636/60-60	0 to 500 mg/l	00409344	00438126
202636/60-70	0 to 2000 mg/l	00409344	00438126
202636/60-80	0 to 10000 mg/l	00438125	00438126
202636/60-81	0 to 20000 mg/l	00572408	00438126
202636/60-85	0 to 50000 mg/l	00572408	00438126
202636/75-45	0 to 200 mg/l	00682748	00682756
202636/75-70	0 to 2000 mg/l	00682748	00682756
202636/75-81	0 to 20000 mg/l	00682748	00682789
202636/80-81	0 to 20000 mg/l	00682753	00682792
202636/80-95	0 to 200000 mg/l	00682753	00682792

= spare part set, additionally with spare G-bracket

4.1 Important information

NOTICE

An unsuitable measuring environment may produce incorrect measurement results.

Using the sensors without the use of suitable flow fittings will lead to incorrect measurement results.

▶ In order to ensure error-free measurements, the sensors must be installed in suitable flow fittings, see chapter 4.2 "Combination fitting (type 202811/10)", page 19 or chapter 4.3 "Flow fitting for membrane-covered sensors (type 202811/30)", page 22.

NOTICE

The membranes may be damaged by high pressure.

Operating the sensors with increased pressure may cause the membranes to rip.

▶ The sensors should be operated under as little pressure as possible, with the measurement media able to flow freely. If this is not possible, the sensors can be operated under a **constant** pressure according to the specifications in chapter 10 "Technical data", page 55. Fluctuations in pressure must be avoided.

NOTICE

Air bubbles may lead to incorrect measurement results.

The presence of air bubbles in the measurement medium in front of the membrane may produce incorrect measurement results.

▶ In order to ensure error-free measurements, the measurement media must be free of air bubbles.

NOTICE

Interruptions in the voltage supply may produce incorrect measurement results.

An interruption in the voltage supply (e.g. in interval operation) may produce incorrect measurement results. The sensors require a settling time period to determine the correct measurement.

▶ In order to ensure error-free measurements, the sensors and transmitters must be permanently supplied with voltage, even in interval operation.

NOTICE

Dry electrolytes may produce incorrect measurement results.

If there is no medium to measure when the membrane cap is filled, a build-up of salt on the inside of the membrane may cause incorrect measurement results.

▶ For sensors with electrolyte-filled membrane caps, the sensor fittings should be prevented from draining or dry running.

NOTICE

Deposits on the membrane may lead to incorrect measurement results.

If there is no disinfectant (hydrogen peroxide or peracetic acid) in the measurement medium for more than 24 hours, this will lead to incorrect measurement results due to deposits (biofilm) on the membrane.

▶ Avoid operating the sensors with measurement medium which does not contain a disinfectant. After operation in a disinfectant-free medium, a settling time period is to be expected. It may be necessary to delay switching on dosing.

4 Mounting

NOTICE

Impurities may produce incorrect measurement results.

Using the sensors to measure media containing oxidants, reducing agents or corrosion protection agents may lead to incorrect measurement results.

▶ Oxidizing agents, reducing agents, corrosion inhibitors, and substances which result in cross sensitivities with the sensors (see information in chapter 10 "Technical data", page 55) must be avoided in the measurement medium.

NOTE!

If no disinfectant is dosed over a long period of time, the sensors must be disconnected from the transmitter/controller, removed and stored correctly; please refer to chapter 7.3 "Storage", page 48.

4.2 Combination fitting (type 202811/10)

4.2.1 Mounting the combination fitting

The combination fitting can be mounted on a wall or an installation panel with the mounting holes (1) using two commercially available M5 cylinder head screws (dia. 5.5 mm, countersink according to DIN 974-1: dia. 11 mm, 5 mm deep, not included in the scope of delivery).

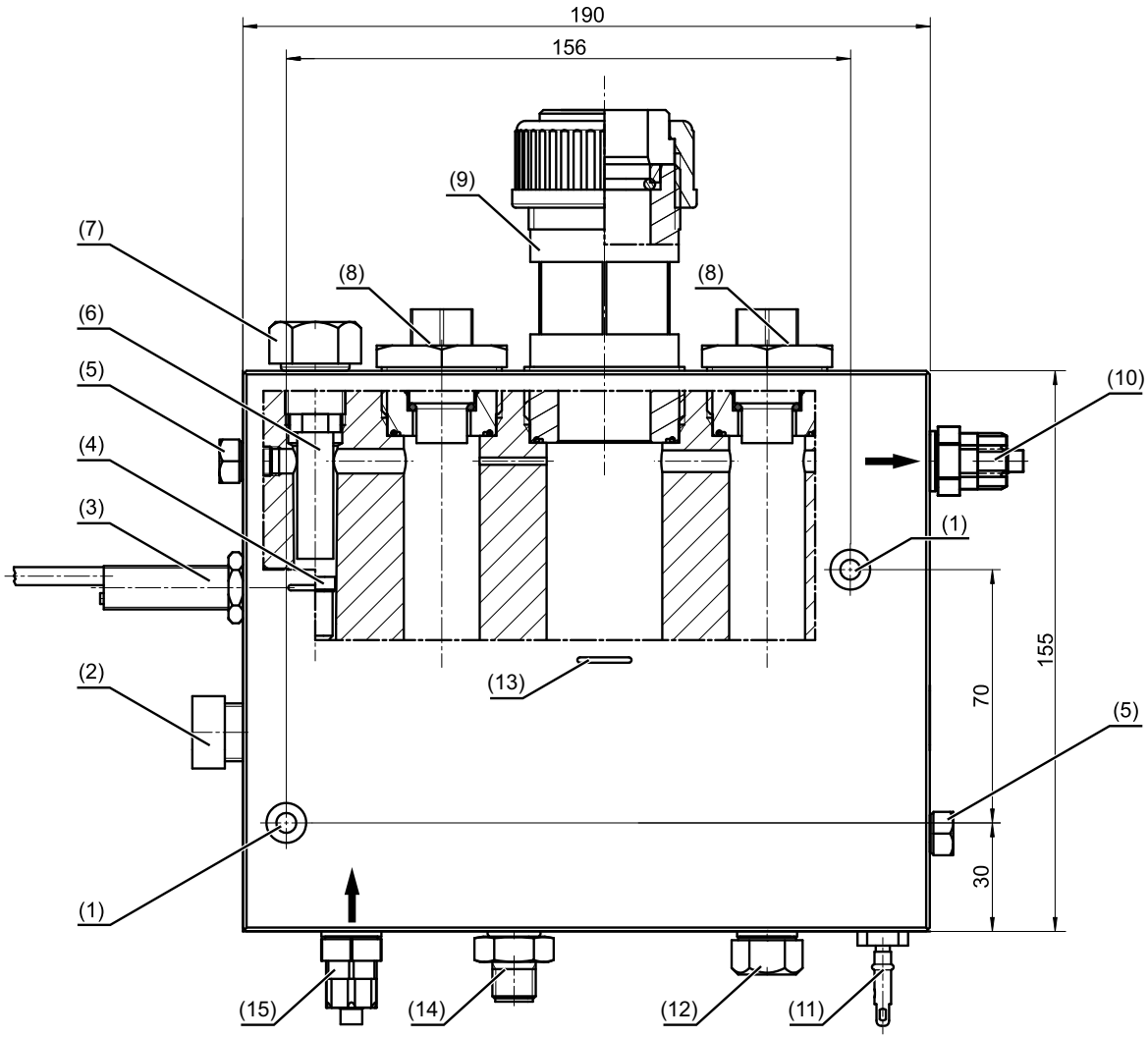

(1) Mounting hole for cylinder head screws M5 (dia. 5.5 mm; countersink: dia. 11 mm, 5 mm deep)
(2) Valve insert for flow control
(3) Inductive proximity sensor[a](flow monitoring), M12 x 1 thread
(4) Floating body for flow monitoring[a]
(5) Sealing screw M8
(6) Extension for M8 sealing screw
(7) Sealing screw G 3/8
(8) Mounting closed with dummy plug for pH/Redox sensor with Pg 13.5 thread
(9) Mounting for membrane-covered sensor with dia. 25 mm
(10) Hose connection for measuring water outflow, connection G 1/4, for hose 6 × 8 (inner dia. 6 mm, outer dia. 8 mm)
(11) M8 ground rod[a]

(12) Sealing screw G 1/4 (opening for optional mini ball valve for sampling)
(13) Indicator for sensor immersion depth
(14) Temperature probe[a]
(15) Hose connection for measuring water inflow, connection to fitting G 1/4, for hose 6 × 8 (inner dia. 6 mm, outer dia. 8 mm)

[a] optionally

4.2.2 Installing the sensor

Overview

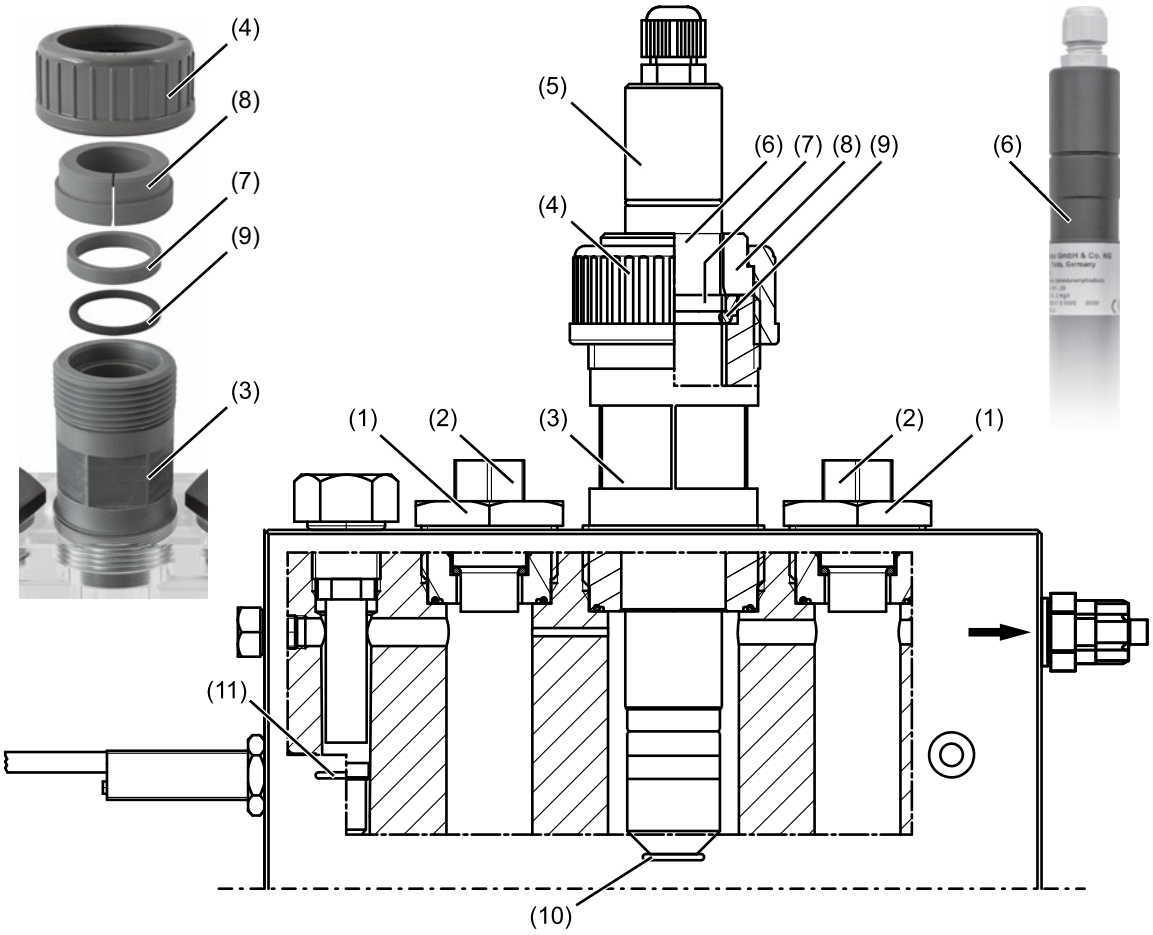

(1) Mounting for pH/Redox sensors
(2) Pg 13.5 pressure screw
(3) Mounting for membrane-covered sensor
(4) Union nut
(5) Membrane-covered sensor
(6) Sensor slot
(7) Pressure ring
(8) Stepped collar
(9) O-Ring
(10) Mark for sensor immersion depth
(11) Mark for floating body height

Installation

NOTICE

Leaks due to incorrect installation

Pollutants on the thread of the union nut (4), the pressure ring (7), the stepped collar (8), the O-ring (9), or a hardened O-ring can cause the fitting to leak when the sensor (5) is installed.

▶ When assembling or installing the sensor, make sure that the O-rings and threads are clean and in good working order.

1. Before installing the sensors, make sure that the system is depressurized.
2. Close the shut-off valves in the inflow and outflow of the fitting.
3. Unscrew the union nut (4).
4. Remove the stepped collar (8). The pressure ring (7) and the O-ring (9) remain in the sensor mounting (3).
5. Slide the stepped collar from above onto the sensor (5) until it engages in the sensor slot (6). The step collar should now rotate easily on the sensor housing.
6. Insert the sensor with the mounted stepped collar into the sensor mounting (3) as far as it will go.
7. Screw the union nut (4) back onto the sensor mounting and tighten it hand-tight.

4 Mounting

4.3 Flow fitting for membrane-covered sensors (type 202811/30)

4.3.1 Mounting the fitting

The flow fitting can be mounted to a wall or an installation panel using an optional mounting bracket (part no.: 00455706).

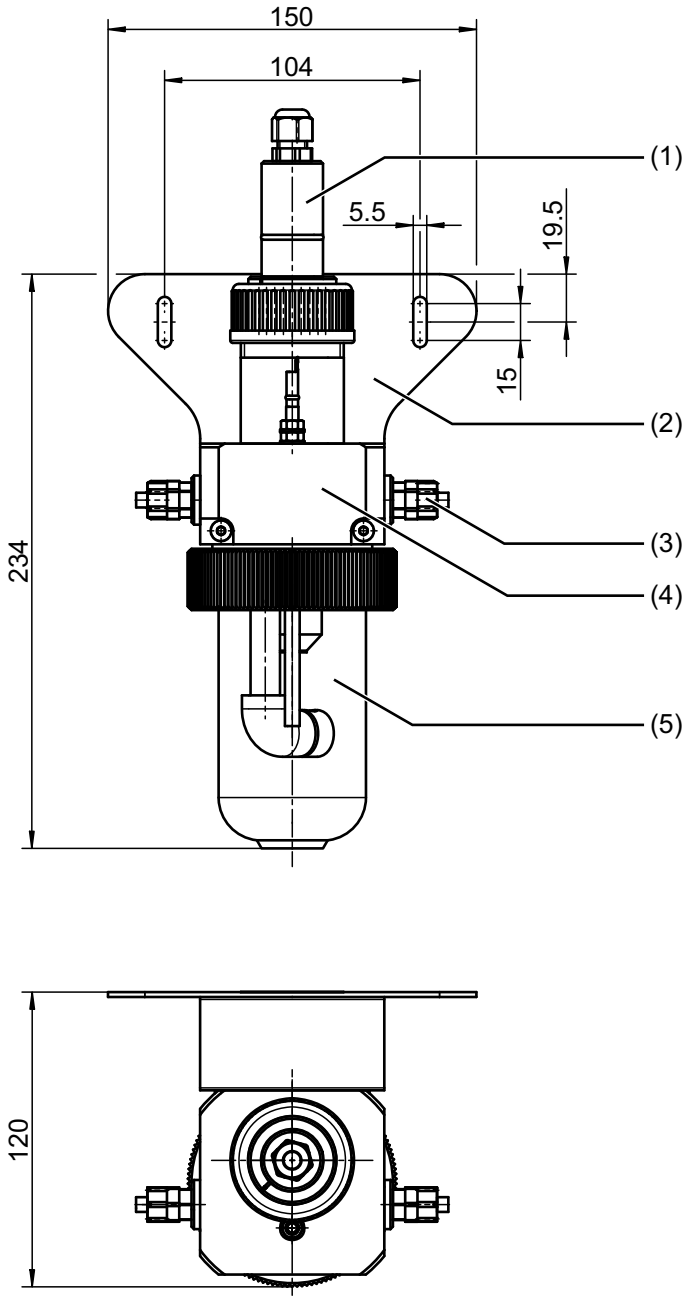

(1) Sensor
(2) Mounting bracket (optional)
(3) Connection G 1/4, for hose Ø 8 mm × 6 mm
(4) Fitting
(5) Removable measuring vessel (inspection glass)

4.3.2 Installing the sensor

Overview

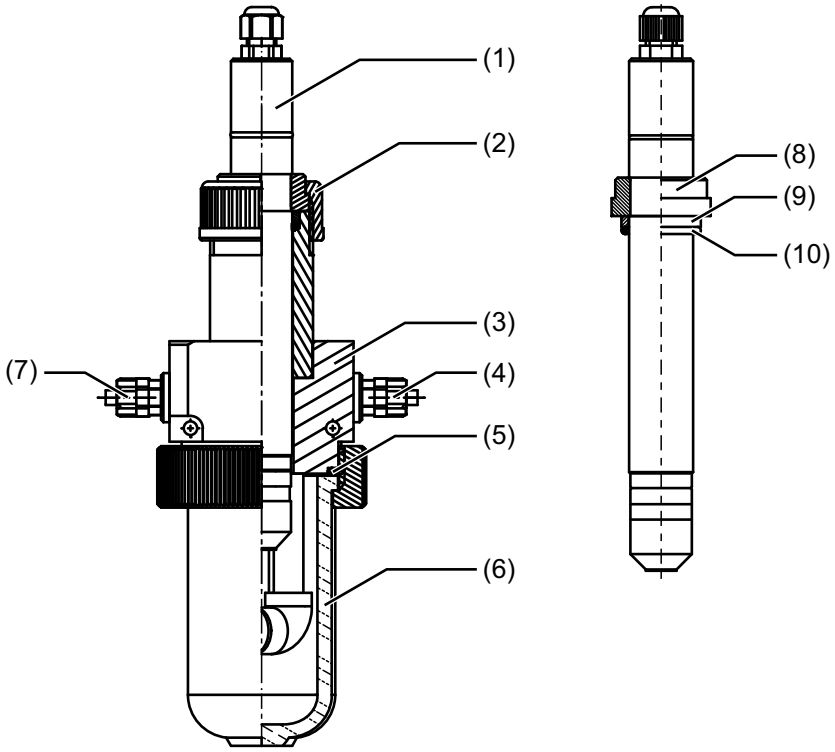

(1) Sensor
(2) Union nut
(3) Fitting housing
(4) G 1/4 A or DN 10 outlet lead
(5) O-ring
(6) Inspection glass
(7) G 1/4 A or DN 10 supply lead
(8) 1-inch stepped collar[a]
(9) Pressure ring[a]
(10) O-ring[a]

[a] Component of the flow fitting

Installation

NOTICE

Incorrect installation may cause leaks.

Pollutants on the thread of the union nut (2) or the O-rings (5, 10), or hardened O-rings can cause the fitting to leak when the sensor (1) is installed.

▶ When assembling or installing the sensor, you must ensure that the O-rings and threads are clean and in good working order.

NOTE!

The inspection glass (6) can be unscrewed from the fitting housing (3) for maintenance purposes.

1. First push the O-ring (10), then the pressure ring (9) and then the 1-inch stepped collar (8) onto the sensor (1) (from the Pg screw connection). The stepped collar (8) must snap into the groove.
2. Once the sensor has been prepared in this way, insert it into the flow fitting housing (3) and fix it in place with the union nut (2).

4 Mounting

4.4 Flow monitor for disinfection measurands (type 202811/20)

4.4.1 Mounting the flow monitor

The flow monitor can be mounted to a wall or an installation panel using the **PP-40 pipe clip** (2) included in the scope of delivery.

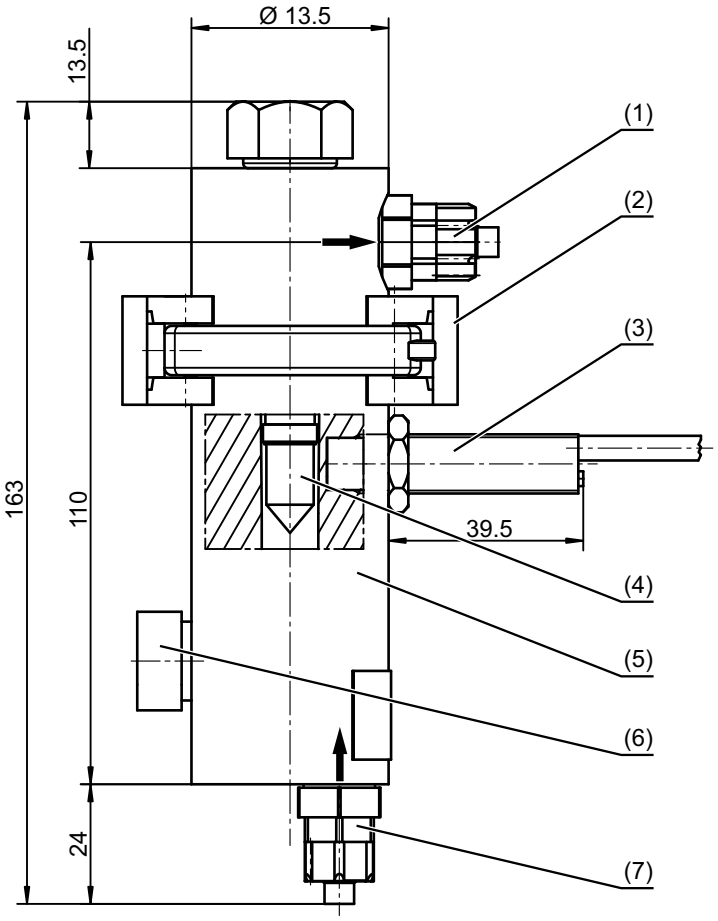

(1) Hose connection for measuring water outflow, connection G 1/4, for hose 6 × 8 (inner dia. 6 mm, outer dia. 8 mm)

(2) **PP-40 pipe clip**

(3) Inductive proximity sensor, M12 x 1 thread

(4) Floating body

(5) Flow body

(6) Needle valve insert for flow control

(7) Hose fitting for measuring water inflow, connection G 1/4, for hose 6 × 8 (inner dia. 6 mm, outer dia. 8 mm)

5.1 Sensors with an output signal of 4 to 20 mA (types 202636/55 and /60)

5.1.1 General requirements

- Cable diameter of approx. 4 mm
- Conductor cross section of 2 x 0.25 mm^2
- Lay the signal lines isolated from cables with a voltage of > 60 V
- Use protected cables with twisted cores
- Keep away from large, electrical plants

5.1.2 Terminal assignment

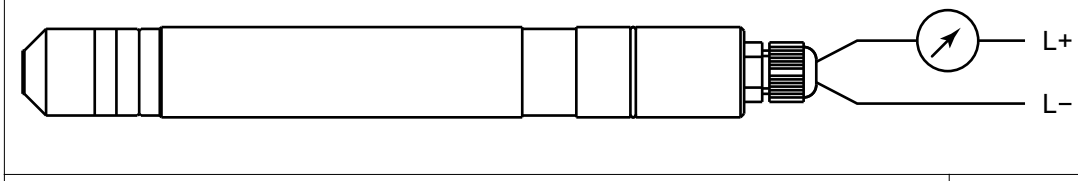

Function		Screw terminals
Voltage supply DC 12 to 30 V	+ -	1 L+ 2 L-
Two-wire output of 4 to 20 mA, load-independent current of 4 to 20 mA in voltage supply	+ -	1 L+ 2 L-

5.1.3 Connection

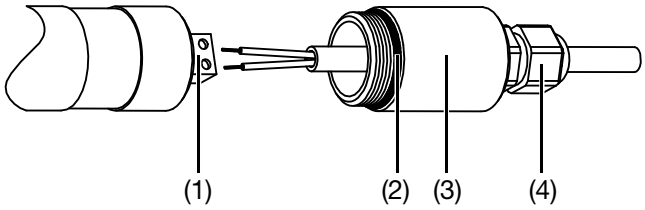

1. Push the cover (3) over the connecting cable.
2. Connect the wires on the terminals (1) in accordance with the terminal assignment.
3. Screw in the cover (3) by hand until the O-ring (2) is sealed.
4. Tighten the Pg screw connection (4).

NOTICE

Potential damage to the sensor

If the steps are not carried out in the correct order before disconnecting the wires, the connection area of the sensors may be damaged.

▶ Loosen the Pg screw connection before unscrewing the cover.

5 Electrical connection

NOTE!

Screws protected by locking varnish must not be adjusted.

Any damage to the locking varnish will result in the loss of the manufacturer's guarantee.

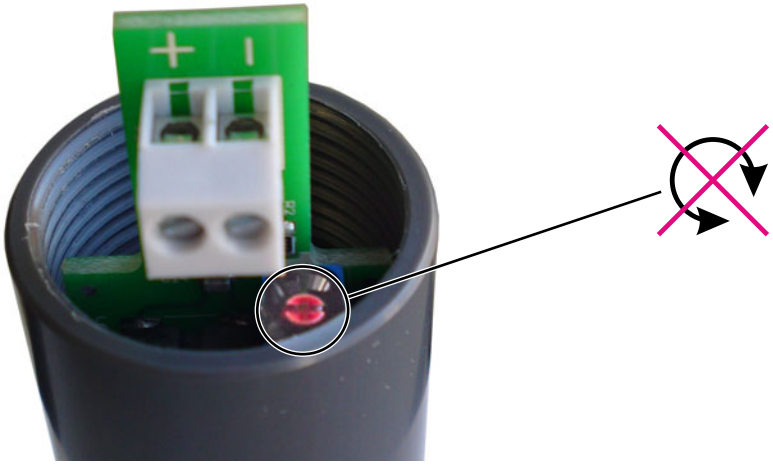

5.2 Sensors with a digital interface output signal (types 202636/75 and /80)

5.2.1 General requirements

- Use connecting cable PN 00638333 (1.5 m) or PN 00638337 (5 m) or PN 00638341 (10 m) for connecting to JUMO AQUIS 500 RS or JUMO AQUIS touch S/P

5.2.2 Terminal assignment



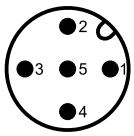

Function	Pin on M12 flange connector
not connected	1
+24 V voltage supply from transmitter/controller	2
GND	3
RS 485 B (RxD/TxD-)	4
RS 485 A (RxD/TxD+)	5

5.3 Flow monitoring (combination fitting and flow monitor)

5.3.1 Terminal assignment

Switching contact = NPN N/O contact (illustration = minimum inflow not reached)

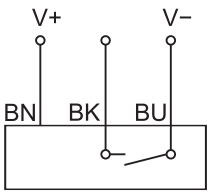

Function	Wire color
+12 V voltage supply from transmitter/controller (V+)	brown (bn)
Contact (NPN N/O contact)	black (bk)
GND (V-)	blue (bu)

5.4 Combination fitting temperature probe

5.4.1 Terminal assignment

Connection for M12 machine connector

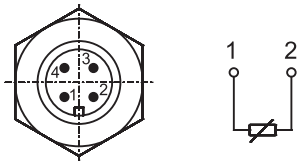

5 Electrical connection

5.5 Example of a measuring section with the sensor type 202636/55

5.5.1 General information

The electronics integrated into the sensor shaft provide an uncalibrated signal of 4 to 20 mA. The signal can be processed by the JUMO AQUIS 500 AS, the JUMO dTRANS AS 02 or the JUMO AQUIS touch S/P. The devices provide the required voltage supply and allow for easy calibration of the measuring system. However, the sensor can also be connected to other indicators, controllers, recorders or PLC systems[1] as long as they supply the sensor with voltage and are able to be calibrated.

5.5.2 Connection example

NOTE!

Before connecting the sensor, you must read the operating manual for the JUMO AQUIS 500 AS.

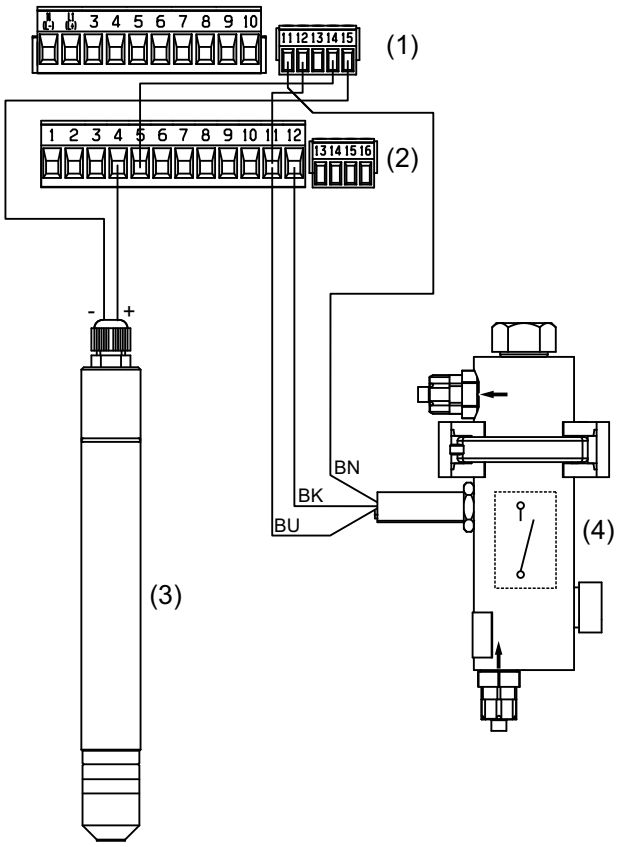

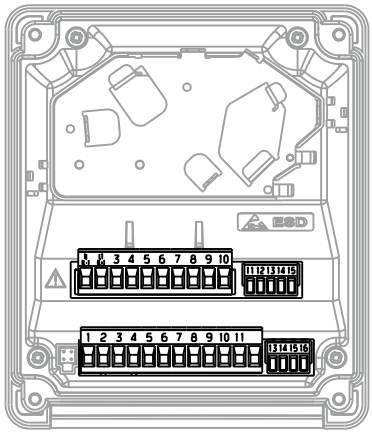

(5)

(1) Terminal block 1
(2) Terminal block 2
(3) Sensor for peracetic acid, type 202636/55
(4) Flow monitor, type 202811/20
(5) JUMO AQUIS 500 AS, type 202568/... with open front cover, please also refer to data sheet and operating manual 202568

Flow monitoring

If the flow monitor (4) signals that the sensor (3) inflow is too low, the input to the JUMO AQUIS 500 AS (5) is switched to binary - the device transitions to "Hold" status and an alarm is output.

[1] Galvanic isolation required.

6.1 Important notes for screwing the membrane cap on and off

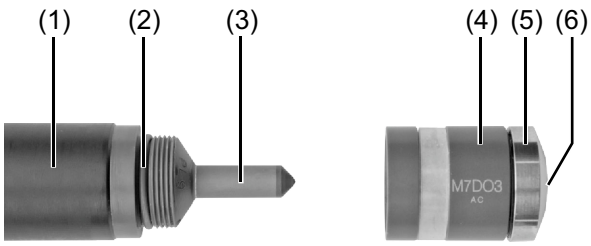

(1) Sensor shaft
(2) O-ring
(3) Electrode finger
(4) Membrane cap
(5) Membrane holder
(6) Membrane

Example: type 202636/55

NOTICE

Damage to the membrane due to unscrewing the membrane holder.

Unscrewing the membrane holder destroys the membrane!

▶ Grip the gray plastic part of the membrane cap when unscrewing it, not the metallic membrane holder.

NOTICE

Touching the electrode finger may damage it

Touching and contaminating the electrode finger can damage it, making the sensor unusable.

▶ Do not touch the electrode finger when carrying out any of the following steps. Carry out the steps exactly as they are described.

NOTICE

Damage to the membrane due to overpressure or underpressure[1]

The membrane is extremely sensitive. Screwing the membrane cap on and off can create overpressure or underpressure in the cap which can damage the membrane.

▶ Closely follow the instructions for unscrewing and screwing on the membrane cap (chapter 6.1 "Important notes for screwing the membrane cap on and off", page 29).

NOTICE

Damage to the membrane due to mechanical influences

When the sensor is ready to take a measurement (membrane cap fully screwed on), the distance between the electrode finger and the membrane is extremely small. Pushing the tip against the sensor can damage the membrane.

▶ The membrane cap must only be screwed onto the sensor immediately before inserting it into a fitting.

NOTE!

In order for the sensor to function correctly, the membrane must be **fully** screwed onto the sensor. The first screw-in resistance is the sealing O-ring. The membrane cap must be screwed on further until it comes into contact with the sensor shaft.

[1] Does not apply to the types 202636/75 and /80 as well as to the types 202636/55-81 and /60-81. These types have an internal pressure compensation system that equalizes pressure fluctuations when unscrewing and screwing the membrane cap.

6 Startup

6.2 Initial filling and installation of the membrane cap

6.2.1 Types with valve opening in the membrane cap (202636/55-45, -60, -70, -75 and 202636/60-60, -70, -80)

NOTE!

The service life of the reference electrolyte is around 3 to 6 months.

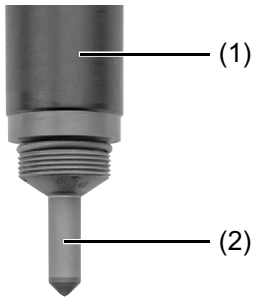

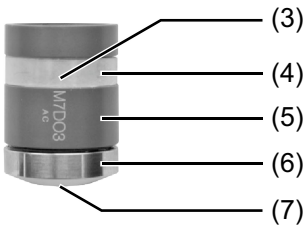

(1) Sensor shaft
(2) Electrode finger
(3) Valve opening
(4) 2 valve covers
(5) Membrane cap
(6) Membrane holder
(7) Membrane

NOTICE

Damage to the membrane due to overpressure or underpressure

The membrane is extremely sensitive. Screwing the membrane cap on and off can create overpressure or underpressure in the cap which can damage the membrane.

▶ Follow the instructions for filling the reference electrolyte closely.

NOTE!

The membrane cap is supplied in a can filled with liquid (water) so that an air layer cannot form on the inside of the membrane.

1.	Open the can with the membrane cap, and drain the liquid (water) from the can.	
2.	Remove the membrane cap and lift the upper of the two transparent valve covers with a small screwdriver or similar and push it down out of the groove.	
3.	Fill the membrane cap up to the brim with **bubble-free** electrolyte (contained in the scope of delivery of the sensor).	

4.	Lift up the filled membrane cap and observe it from above against a light background (transmitted light). If air pockets are detected in the membrane area: Apply the "tapping procedure", as described below in point 5. If no air pockets are detected in the membrane area: continue to proceed as described in point 6.	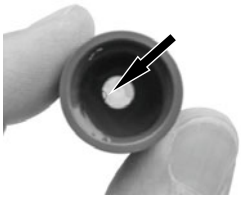
5.	*Tapping procedure:* Hold the filled membrane cap as shown in the adjacent figure. Tap the cap with the sensor shaft until no more air bubbles emerge. If necessary, refill any spilled electrolytes.	
6.	Remove the black protective hose from the electrode finger.	
7.	Use the special abrasive paper included in the scope of delivery to clean **just the tip** of the dry electrode finger (=measuring electrode). Hold the soft base with the special abrasive paper in place and, while holding the sensor at a slight angle, run the tip of the electrode over the abrasive paper. Then rotate the sensor slightly in its axis and run it over the abrasive paper again. Repeat this procedure multiple times.	
8.	Holding the sensor shaft vertically, slowly insert it into the filled membrane cap and fit it onto the membrane cap. Then slowly screw the sensor shaft into the membrane cap in a clockwise direction. **When holding the membrane cap, do not hold it by the valve (above the laser engraving, see arrow in the figure on the right).** Any surplus electrolyte will leak out of the valve.	
9.	Ensure that the membrane cap is screwed on over the sealing O-ring and tightly against the sensor shaft (no gap between the membrane cap and sensor shaft, see figure on the right). Rinse off any electrolyte on the exterior with water.	
10.	Also push the second valve cover into the groove above the first valve cover. In doing so, make sure that the valve covers do not buckle!	

NOTE!

In order for the sensor to function correctly, the membrane must be **fully** screwed onto the sensor. The first screw-in resistance is the sealing O-ring. The membrane cap must be screwed on further until it comes into contact with the sensor shaft.

NOTICE

Damage to the membrane due to mechanical influences

When the sensor is ready to take a measurement (membrane cap fully screwed on), the distance between the electrode finger and the membrane is extremely small. Pushing the tip against the sensor can damage the membrane.

▶ Only commission the sensor immediately before inserting it into a fitting.

6.2.2 Types with an internal pressure compensation system (202636/55-81, /60-81, /60-85, /75 and /80)

NOTE!

The service life of the reference electrolyte is around 3 to 6 months.

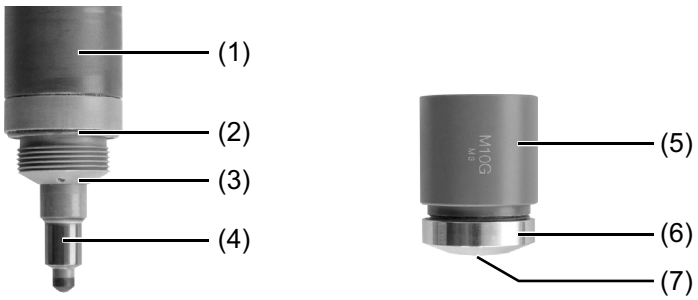

(1) Sensor shaft
(2) O-ring 20 × 1.5
(3) Opening for pressure compensation
(4) Electrode finger
(5) Membrane cap
(6) Membrane holder
(7) Membrane

1.	Remove the transparent protective cap of the membrane cap and unscrew the membrane cap (which is delivered loosely screwed on) from the electrode shaft.	
2.	Place the membrane cap on a clean surface and fill up with electrolyte (contained in the scope of delivery of the sensor).	
3.	Place the G-bracket on a clean, non-absorbent surface and moisten with electrolyte.	

4.	Use the tweezers included in the scope of delivery to pick up the G-bracket moistened with electrolyte. Use the tweezers to insert and lower the G-bracket into the center of the filled membrane cap until it is incorporated into the recess in the middle of the membrane cap and sits there tightly. Then carefully pull out the tweezers again. The G-bracket remains in the membrane cap.	
5.	Use the special abrasive paper included in the scope of delivery to clean **just the tip** of the dry electrode finger (=working electrode). To do so, hold the special abrasive paper in place by one corner, and, while holding the measuring cell vertically, run the tip of the electrode over the abrasive paper two or three times.	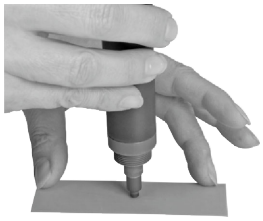
6.	Holding the electrode shaft vertically, fit it into the filled membrane cap with the inserted G-bracket. Then slowly screw the electrode shaft into the membrane cap in a clockwise direction (by hand) in a vertical position.	
7.	Make sure that the red O-ring 20 × 1.5 is fitted perfectly (membrane cap sealed). Screw the membrane cap (by hand) **tightly** against the electrode shaft. The red O-ring 20 × 1.5 mm is pressed in. After this point, no more electrolyte may leak out of the sensor. The membrane or membrane disk is curved outward by the electrolyte finger - so **do not push it!** Rinse off any electrolyte on the exterior with water.	

NOTE!

In order for the sensor to function correctly, the membrane must be **fully** and tightly screwed onto the sensor.

NOTICE

Damage to the membrane due to mechanical influences

When the sensor is ready to take a measurement (membrane cap fully screwed on), the distance between the electrode finger and the membrane is extremely small. Pushing the tip against the sensor can damage the membrane.

▶ Only commission the sensor immediately before inserting it into a fitting.

6.3 Minimum inflow

NOTE!

The flow rate from the measurement medium must be at least **15 cm/s** in order for the sensor to work correctly. The minimum flow rate in the combination fitting or the flow fitting is **30 l/h**. Values measured by the sensors below the minimum inflow speed are too low. This can cause dangerous overdosage in a connected regulating system. If values are measured above the minimum inflow speed, the measurement signal is only marginally influenced by the inflow speed.

6.3.1 Adjusting the minimum inflow (combination fitting and flow monitor)

The flow in the fitting is regulated by turning the valve insert (4).

The minimum inflow is reached when the flow of the measurement medium lifts the floating body (3) enough for the top edge to reach the marking (1).

If the combination fitting is equipped with a flow monitor, the contact of the inductive proximity sensor (2) closes and sends a signal to the connected evaluation unit/controller indicating that the minimum inflow has been reached; please refer to "Flow monitoring (combination fitting and flow monitor) ", page 27.

The principle is illustrated by the graphic using the combination fitting as an example, but the same principle applies for separate flow monitors (when the sensor is used in the flow fitting).

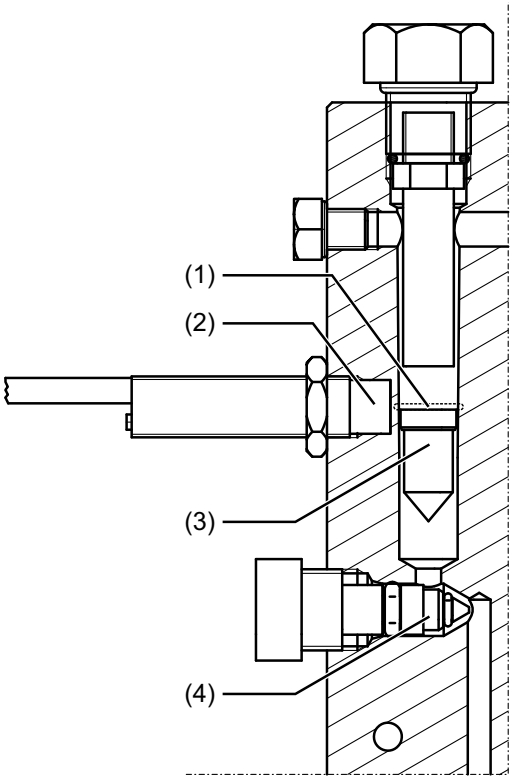

6.4 Settling time

NOTE!

The sensors will only measure a constant value at the end of the settling time and can then be calibrated.

Settling time	
Type 202636/55	approx. 1 hour
Type 202636/75	
Type 202636/60	approx. 3 hours
Type 202636/80	

On the day after the initial startup, the calibration procedure should be repeated.

7 Maintenance

7.1 Replacing the electrolyte

7.1.1 Types with valve opening in the membrane cap (202636/55-45, -60, -70, -75 and 202636/60-60, -70, -80)

The electrolyte should be replaced every three to six months and after calibration performed due to instable measuring values or a value that is too low.

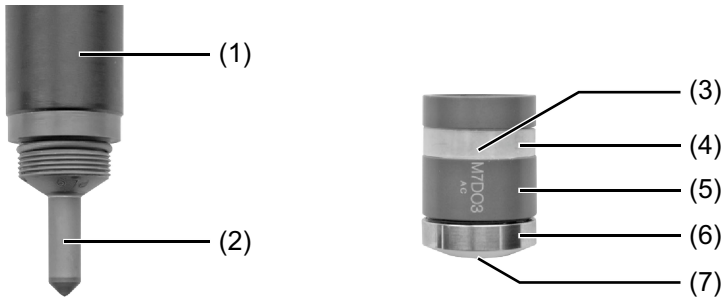

(1) Sensor shaft
(2) Electrode finger
(3) Valve opening
(4) 2 valve covers
(5) Membrane cap
(6) Membrane holder
(7) Membrane

NOTICE

Damage to the membrane due to overpressure or underpressure

The membrane is extremely sensitive. Screwing the membrane cap on and off can create overpressure or underpressure in the cap which can damage the membrane.

▶ Closely follow the instructions for replacing the electrolytes.

NOTICE

Damage to the membrane due to unscrewing the membrane holder.

Unscrewing the membrane holder destroys the membrane!

▶ Grip the gray plastic part of the membrane cap when unscrewing it, not the metallic membrane holder.

NOTICE

Touching the electrode finger may damage it

Touching and contaminating the electrode finger can damage it, making the sensor unusable.

▶ Do not touch the electrode finger when carrying out any of the following steps. Carry out the steps exactly as they are described.

1.	The valve opening is above the laser engraving on the membrane cap. Lift both valve covers with a small screwdriver or similar and push it down out of the groove in order to clear the valve opening.	
2.	Unscrew the membrane cap from the sensor shaft, discard the used up electrolyte.	
3.	Rinse the electrode finger with clean water and dry it with a clean paper cloth.	

4.	Use the special abrasive paper included in the scope of delivery to clean **just the tip** of the dry electrode finger (=measuring electrode). Hold the soft base with the special abrasive paper in place and, while holding the sensor at a slight angle, run the tip of the electrode over the abrasive paper. Then rotate the sensor slightly in its axis and run it over the abrasive paper again. Repeat this procedure multiple times.	
5.	Push one valve cover back into the groove.	
6.	Fill the membrane cap up to the brim with **bubble-free** electrolyte (contained in the scope of delivery of the sensor).	
7.	Lift up the filled membrane cap and observe it from above against a light background (transmitted light). If air pockets are detected in the membrane area: Apply the "tapping procedure", as described below in point 8. If no air pockets are detected in the membrane area: continue to proceed as described in point 9.	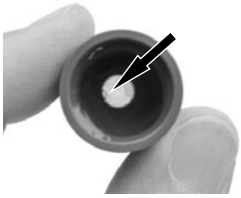
8.	*Tapping procedure:* Hold the filled membrane cap as shown in the adjacent figure. Tap the cap with the sensor shaft until no more air bubbles emerge. If necessary, refill any spilled electrolytes.	
9.	Holding the sensor shaft vertically, slowly insert it into the filled membrane cap and fit it onto the membrane cap. Then slowly screw the sensor shaft into the membrane cap in a clockwise direction. **When holding the membrane cap, do not hold it by the valve (above the laser engraving, see arrow in the figure on the right).** Any surplus electrolyte will leak out of the valve.	

10.	Ensure that the membrane cap is screwed on over the sealing O-ring and tightly against the sensor shaft (no gap between the membrane cap and sensor shaft, see figure on the right). Rinse off any electrolyte on the exterior with water.	
11.	Also push the second valve cover into the groove above the first valve cover. In doing so, make sure that the valve covers do not buckle!	

NOTICE

Damage to the membrane due to mechanical influences

When the sensor is ready to take a measurement (membrane cap fully screwed on), the distance between the electrode finger and the membrane is extremely small. Pushing the tip against the sensor can damage the membrane.

▶ Insert the sensor back into the fitting immediately after replacing the electrolyte.

NOTE!

In order for the sensor to function correctly, the membrane must be **fully** screwed onto the sensor. The first screw-in resistance is the sealing O-ring. The membrane cap must be screwed on further until it comes into contact with the sensor shaft.

NOTE!

If the sensor still provides measured values that are too low or instable after the electrolyte replacement, a new membrane cap must be used.

7.1.2 Types with an internal pressure compensation system (202636/55-81, /60-81, /60-85, /75 and /80)

The electrolyte should be replaced every three to six months and after calibration performed due to instable measuring values or a value that is too low.

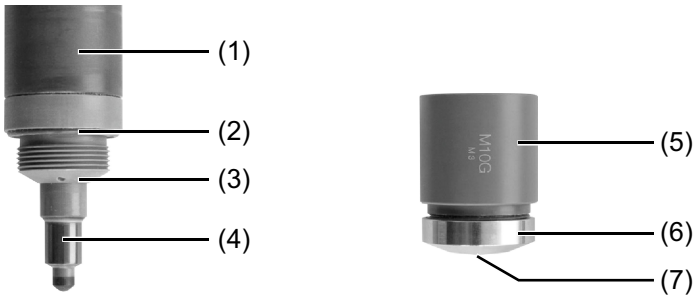

(1) Sensor shaft
(2) O-ring 20 × 1.5
(3) Opening for pressure compensation
(4) Electrode finger
(5) Membrane cap
(6) Membrane holder
(7) Membrane

NOTICE

Damage to the membrane due to unscrewing the membrane holder.

Unscrewing the membrane holder destroys the membrane!

▶ Grip the gray plastic part of the membrane cap when unscrewing it, not the metallic membrane holder.

NOTICE

Touching the electrode finger may damage it

Touching and contaminating the electrode finger (2) can damage it, making the sensor unusable.

▶ Do not touch the electrode finger when carrying out any of the following steps. Carry out the steps exactly as they are described.

1.	Unscrew the membrane cap from the sensor shaft.	
2.	Rinse the electrode finger with clean water and dry it with a clean paper cloth.	
3.	Spin the sensor shaft downward several times with an outstretched arm (like when shaking a liquid thermometer). This empties the opening for pressure compensation. Then dry it again using a clean paper towel.	
4.	Use the special abrasive paper included in the scope of delivery to clean **just the tip** of the dry electrode finger (=working electrode). To do so, hold the special abrasive paper in place by one corner, and, while holding the measuring cell vertically, run the tip of the electrode over the abrasive paper two or three times.	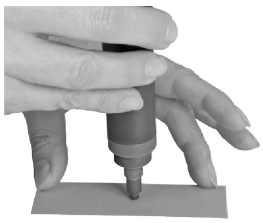
5.	If the red O-ring 20 × 1.5 mm (2) is widened, it must be replaced.	

6.	Place the membrane cap on a clean surface and remove the G-bracket from the recess in the center using the tweezers included in the scope of delivery. Discard the used up electrolyte from the G-bracket and membrane cap. Rinse the material of the G-bracket well on both sides using clean water.	
7.	Place the membrane cap on a clean surface and fill up with electrolyte (contained in the scope of delivery of the sensor).	
8.	Place the G-bracket on a clean, non-absorbent surface and moisten with electrolyte.	
9.	Use the tweezers included in the scope of delivery to pick up the G-bracket moistened with electrolyte. Use the tweezers to insert and lower the G-bracket into the center of the filled membrane cap until it is incorporated into the recess in the middle of the membrane cap and sits there tightly. Then carefully pull out the tweezers again. The G-bracket remains in the membrane cap.	

10.	Holding the electrode shaft vertically, fit it into the filled membrane cap with the inserted G-bracket. Then slowly screw the electrode shaft into the membrane cap in a clockwise direction (by hand) in a vertical position.	
11.	Make sure that the red O-ring 20 × 1.5 is fitted perfectly (membrane cap sealed). Screw the membrane cap (by hand) **tightly** against the electrode shaft. The red O-ring 20 × 1.5 mm is pressed in. After this point, no more electrolyte may leak out of the sensor. The membrane or membrane disk is curved outward by the electrolyte finger - so **do not push it!** Rinse off any electrolyte on the exterior with water.	

NOTICE

Damage to the membrane due to mechanical influences

When the sensor is ready to take a measurement (membrane cap fully screwed on), the distance between the electrode finger and the membrane is extremely small. Pushing the tip against the sensor can damage the membrane.

▶ Only commission the sensor immediately before inserting it into a fitting.

NOTE!

In order for the sensor to function correctly, the membrane must be **fully** and tightly screwed onto the sensor.

NOTE!

If the sensor still provides measured values that are too low or instable after the electrolyte replacement, a new membrane cap with a new G-bracket must be used. The settling phase can last up to a day for a new membrane cap!

7 Maintenance

7.2 Replacing the membrane cap

7.2.1 Types with valve opening in the membrane cap (202636/55-45, -60, -70, -75 and 202636/60-60, -70, -80)

The membrane cap should be renewed under the following conditions:

- regularly after one year of operation
- if the measured values are still too low or instable after a prior calibration

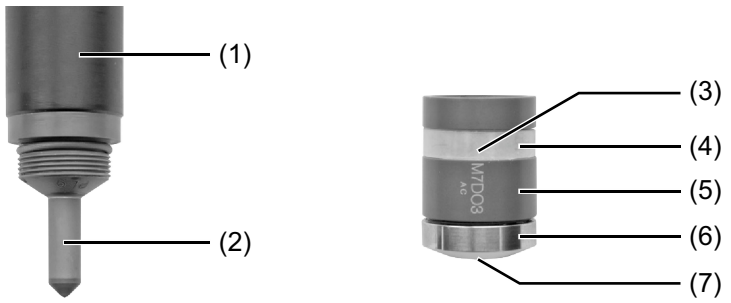

(1) Sensor shaft
(2) Electrode finger
(3) Valve opening
(4) 2 valve covers
(5) Membrane cap
(6) Membrane holder
(7) Membrane

NOTICE

Damage to the membrane due to overpressure or underpressure

The membrane is extremely sensitive. Screwing the membrane cap on and off can create overpressure or underpressure in the cap which can damage the membrane.

▶ Closely follow the instructions for replacing the membrane cap.

NOTICE

Touching the electrode finger may damage it

Touching and contaminating the electrode finger can damage it, making the sensor unusable.

▶ Do not touch the electrode finger when carrying out any of the following steps. Carry out the steps exactly as they are described.

NOTE!

The membrane cap is supplied in a can filled with liquid (water) so that an air layer cannot form on the inside of the membrane.

1.	The valve opening is above the laser engraving on the membrane cap. Lift both valve covers with a small screwdriver or similar and push it down out of the groove in order to clear the valve opening.	
2.	Unscrew the membrane cap from the sensor shaft, discard the used up electrolyte.	
3.	Rinse the electrode finger with clean water and dry it with a clean paper cloth.	
4.	Open the can with the new membrane cap, and drain the liquid (water) from the can.	

5.	Remove the membrane cap and lift the upper of the two transparent valve covers with a small screwdriver or similar and push it down out of the groove.	
6.	Fill the membrane cap up to the brim with **bubble-free** electrolyte (contained in the scope of delivery of the sensor).	
7.	Lift up the filled membrane cap and observe it from above against a light background (transmitted light). If air pockets are detected in the membrane area: Apply the "tapping procedure", as described below in point 8. If no air pockets are detected in the membrane area: continue to proceed as described in point 9.	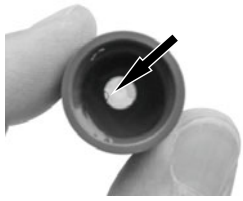
8.	*Tapping procedure:* Hold the filled membrane cap as shown in the adjacent figure. Tap the cap with the sensor shaft until no more air bubbles emerge. If necessary, refill any spilled electrolytes.	
9.	Use the special abrasive paper included in the scope of delivery to clean **just the tip** of the dry electrode finger (=measuring electrode). Hold the soft base with the special abrasive paper in place and, while holding the sensor at a slight angle, run the tip of the electrode over the abrasive paper. Then rotate the sensor slightly in its axis and run it over the abrasive paper again. Repeat this procedure multiple times.	
10.	Holding the sensor shaft vertically, slowly insert it into the filled membrane cap and fit it onto the membrane cap. Then slowly screw the sensor shaft into the membrane cap in a clockwise direction. **When holding the membrane cap, do not hold it by the valve (above the laser engraving, see arrow in the figure on the right).** Any surplus electrolyte will leak out of the valve.	

11.	Ensure that the membrane cap is screwed on over the sealing O-ring and tightly against the sensor shaft (no gap between the membrane cap and sensor shaft, see figure on the right). Rinse off any electrolyte on the exterior with water.	
12.	Also push the second valve cover into the groove above the first valve cover. In doing so, make sure that the valve covers do not buckle!	

NOTE!

In order for the sensor to function correctly, the membrane must be **fully** screwed onto the sensor. The first screw-in resistance is the sealing O-ring. The membrane cap must be screwed on further until it comes into contact with the sensor shaft.

NOTICE

Damage to the membrane due to mechanical influences

When the sensor is ready to take a measurement (membrane cap fully screwed on), the distance between the electrode finger and the membrane is extremely small. Pushing the tip against the sensor can damage the membrane.

▶ Insert the sensor back into the fitting immediately after replacing the membrane cap.

7.2.2 Types with an internal pressure compensation system (202636/55-81, /60-81, /60-85, /75 and /80)

The membrane cap should be renewed under the following conditions:

- regularly after one year of operation
- if the measured values are still too low or instable after a prior calibration

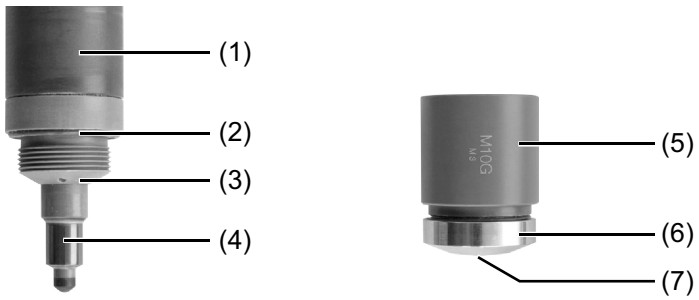

(1) Sensor shaft
(2) O-ring 20 × 1.5
(3) Opening for pressure compensation
(4) Electrode finger
(5) Membrane cap
(6) Membrane holder
(7) Membrane

NOTICE

Touching the electrode finger may damage it

Touching and contaminating the electrode finger can damage it, making the sensor unusable.

▶ Do not touch the electrode finger when carrying out any of the following steps. Carry out the steps exactly as they are described.

1.	Unscrew the membrane cap from the sensor shaft.	
2.	Rinse the electrode finger with clean water and dry it with a clean paper cloth.	
3.	Spin the sensor shaft downward several times with an outstretched arm (like when shaking a liquid thermometer). This empties the opening for pressure compensation. Then dry it again using a clean paper towel.	
4.	Use the special abrasive paper included in the scope of delivery to clean **just the tip** of the dry electrode finger (=working electrode). To do so, hold the special abrasive paper in place by one corner, and, while holding the measuring cell vertically, run the tip of the electrode over the abrasive paper two or three times.	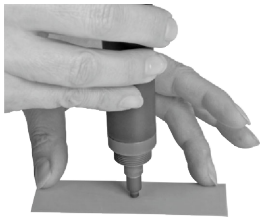
5.	If the red O-ring 20 × 1.5 mm is widened, it must be replaced.	
6.	Place the new membrane cap on a clean surface and fill up with electrolyte (contained in the scope of delivery of the sensor).	

7.	Place the G-bracket on a clean, non-absorbent surface and moisten with electrolyte.	
8.	Use the tweezers included in the scope of delivery to pick up the G-bracket moistened with electrolyte. Use the tweezers to insert and lower the G-bracket into the center of the filled membrane cap until it is incorporated into the recess in the middle of the membrane cap and sits there tightly. Then carefully pull out the tweezers again. The G-bracket remains in the membrane cap.	
9.	Holding the electrode shaft vertically, fit it into the filled membrane cap with the inserted G-bracket. Then slowly screw the electrode shaft into the membrane cap in a clockwise direction (by hand) in a vertical position.	
10.	Make sure that the red O-ring 20 × 1.5 is fitted perfectly (membrane cap sealed). Screw the membrane cap (by hand) **tightly** against the electrode shaft. The red O-ring 20 × 1.5 mm is pressed in. After this point, no more electrolyte may leak out of the sensor. The membrane or membrane disk is curved outward by the electrolyte finger - so **do not push it!** Rinse off any electrolyte on the exterior with water.	

NOTICE

Damage to the membrane due to mechanical influences

When the sensor is ready to take a measurement (membrane cap fully screwed on), the distance between the electrode finger and the membrane is extremely small. Pushing the tip against the sensor can damage the membrane.

▶ Only commission the sensor immediately before inserting it into a fitting.

NOTE!

In order for the sensor to function correctly, the membrane must be **fully** and tightly screwed onto the sensor.

NOTE!

The settling phase can last up to a day for a new membrane cap! If the sensor still provides measured values that are too low or instable after the membrane cap replacement, the manufacturer must perform a check/overhaul.

7 Maintenance

7.3 Storage

NOTE!

Membrane caps which have been in operation for longer than a day cannot be stored and used again.

7.3.1 Types with valve opening in the membrane cap (202636/55-45, -60, -70, -75 and 202636/60-60, -70, -80)

NOTICE

Damage to the membrane due to overpressure or underpressure

The membrane is extremely sensitive. Screwing the membrane cap on and off can create overpressure or underpressure in the cap which can damage the membrane.

▶ Closely follow the instructions for unscrewing and screwing the membrane cap (chapter 6.1 "Important notes for screwing the membrane cap on and off", page 29).

Preparation for storage

1. Open valve cover(s) of the membrane cap.
2. Unscrew the membrane cap from the sensor shaft.
3. Discard the electrolyte.
4. Rinse the membrane cap and electrode finger with tap water and dry them, ensuring they are free from dust.
5. Loosely screw the dry membrane cap onto the sensor shaft. The membrane must not be positioned at the tip of the electrode finger.

The sensor is ready to be stored.

Restarting after storage

1. Unscrew the membrane cap, which has only loosely been screwed on for storage, from the sensor shaft.
2. Use the special abrasive paper provided to clean the tip of the electrode finger.
3. Fill the new membrane cap with electrolyte and screw it onto the sensor shaft.
   Make sure that the valve opening is not held shut.

The sensor is ready for operation.

7.3.2 Types with an internal pressure compensation system (202636/55-81, /60-81, /60-85, /75 and /80)

Preparation for storage

1. Unscrew the membrane cap from the sensor shaft.
2. Remove the G-bracket from the membrane cap using the tweezers provided.
3. Discard the electrolyte.
4. Rinse the membrane cap and electrode finger with distilled water and dry them, ensuring they are free from dust.
5. Loosely screw the dry membrane cap onto the sensor shaft. The membrane must not be positioned at the tip of the electrode finger.

The sensor is ready to be stored.

Restarting after storage

1. Unscrew the membrane cap, which has only loosely been screwed on for storage, from the sensor shaft.
2. Use the special abrasive paper provided to clean the tip of the electrode finger.
3. Fill the new membrane cap with electrolyte, insert the new G-bracket and screw the membrane cap onto the sensor shaft.

The sensor is ready for operation.

NOTE!

Membrane caps which have been in operation for longer than a day cannot be stored and used again!

7.4 Consumable material

Spare part sets and electrolytes

Sensor	**Measuring range**	**Part no. Spare parts set** (membrane cap, fine abrasive paper)	**Part no. electrolyte** (100 ml)
202636/55-45	0 to 200 mg/l	00409344	00440821
202636/55-60	0 to 500 mg/l	00409344	00440821
202636/55-70	0 to 2000 mg/l	00409344	00440821
202636/55-75	0 to 5000 mg/l	00493433	00684631
202636/55-81	0 to 20000 mg/l	00673072	00673075
202636/60-60	0 to 500 mg/l	00409344	00438126
202636/60-70	0 to 2000 mg/l	00409344	00438126
202636/60-80	0 to 10000 mg/l	00438125	00438126
202636/60-81	0 to 20000 mg/l	00572408	00438126
202636/60-85	0 to 50000 mg/l	00572408	00438126
202636/75-45	0 to 200 mg/l	00682748	00682756
202636/75-70	0 to 2000 mg/l	00682748	00682756
202636/75-81	0 to 20000 mg/l	00682748	00682789
202636/80-81	0 to 20000 mg/l	00682753	00682792
202636/80-95	0 to 200000 mg/l	00682753	00682792

= spare part set, additionally with spare G-bracket

8 Calibration

8.1 General information

NOTE!

According to requirements, the sensor should be inspected or calibrated at regular fixed intervals.

Recommendation: weekly, or more frequently depending on the accuracy requirements.

8.2 Calibrating with an indicator/controller

Reference method

NOTE!

The single-stage sulphuric acid titration with potassium permanganate and sodium thiosulfate is a suitable reference method for calibrating the sensors for hydrogen peroxide (202636/60 and /80).

The two-stage sulphuric acid titration with potassium permanganate and sodium thiosulfate is a suitable reference method for calibrating the sensors for peracetic acid (202636/55 and /75).

You can find more information on this in chapter 11.1 "Suitable titration methods", page 58.

Initial situation

- Display format and measuring range are set, refer to the operating manual for the indicator/controller used.
- The sensor is installed in a suitable flow fitting (refer to chapter 4.3 "Flow fitting for membrane-covered sensors (type 202811/30)", page 22) or combination fitting (refer to chapter 4.2 "Combination fitting (type 202811/10)", page 19).
- The settling time for the sensor (**1 hour** for types 202636/55 and /75; **3 hours** for types 202636/60 and /80) has elapsed and the measured value is stable.

Procedure

1. Take a water sample from the outlet of the fitting (or from the immediate vicinity).
2. Immediately determine the analyte concentration (hydrogen peroxide or peracetic acid) of the sample using a suitable reference method.
3. Calibrate the indicator on the basis of the reference value; refer to the operating manual for the transmitter/controller used.

Checking the determined slope

Many transmitters/controllers (e.g. the JUMO AQUIS 500 AS) have a "calibration logbook". This logbook is used to record the relevant data during every calibration.

NOTE!

If the value for the nominal slope is **under 30%**, the membrane cap and the electrolyte must be replaced and the electrode tip must be cleaned; see chapter 7.2 "Replacing the membrane cap", page 42.

Setting the slope manually

Refer to the operating manual for the transmitter/controller used.

Zero point adjustment

A zero point adjustment is **not** required for the sensors described in this operating manual. If there is no analyte in the measurement medium, the value displayed will be a zero. The zero point is **not dependent** on changes in the flow, conductivity, temperature or the pH value.

9.1 General troubleshooting

Error/fault	Possible cause	Remedy	Preventative measures
Output signal of the sensor is too low or too high	Incorrect calibration	Repeat calibration according to the titration method; refer to chapter 8.2 "Calibrating with an indicator/controller", page 50	Calibrate the sensor more frequently, if required
Output signal of the sensor is too low Sensor cannot be calibrated to the titration value	Settling time too short	Wait for at least two hours	
	Deposit on the electrode finger tip (measuring electrode)	Clean the electrode finger tip	Shorten the maintenance intervals, if required
	Inflow to the measuring cell is too low	Increase the inflow	Monitor the minimum inflow
Output signal of the sensor is too low Sensor cannot be calibrated to the titration value Output signal of the sensor decreases or stays the same when the titration value is increased Fluctuating signal	Membrane destroyed: electrolyte leaking out - measurement medium leaking in	Replace the membrane cap	Avoid damaging the membrane. Do not push the sensor open when the membrane cap is screwed on. Prevent coarse particles or fragments of glass from flowing in
	Deposits on the membrane cap	Replace the membrane cap	
	Gas bubbles on the outside of the membrane	Briefly increase the flow	Check the installation and change if necessary
	No electrolyte in the membrane cap	Fill the membrane cap with electrolyte; refer to chapter 7.1 "Replacing the electrolyte", page 36	
Output signal of the sensor is too high. Sensor cannot be calibrated to the titration value	Besides the analytes, the measurement medium also contains other oxidizing agents, such as Cl_2	Avoid adding these substances. Change the water	Ensure cleaning agents and disinfectants are removed fully after use
The titration and sensor values match; the redox measurement trend is correct, but the setpoint value is not reached	Incorrect control parameters	Optimize the control parameters	
	The amount of disinfectant dosed per unit of time is too high. The concentration is exceeded before the measurement medium reaches the sensor	Reduce the amount admixed per unit of time. Reduce the concentration of disinfectant in the solution added	
	Flow through the system is too low	Improve through-mixing	Implement structural measures for better through-mixing
Sensor and titration values do not match; the sensor values fluctuate: too high/ too low	Incorrect control parameters	Optimize the control parameters	
	Flow through the system is too low	Improve through-mixing	Implement structural measures for better through-mixing

9 Overcoming errors and malfunctions

Error/fault	Possible cause	Remedy	Preventative measures
Sensor displays unusually sluggish response behavior	The membrane is partially blocked by pollutants such as calcium or oil. Disinfectant is prevented from reaching the sensor	Replace the membrane cap	Take measures to improve the quality of the water
Only for types 202636/55 and /60 (output signal of 4 to 20 mA):			
Output signal of the sensor is "0"	The sensor has been connected to the transmitter/controller with reverse polarity	Connect the sensor correctly; refer to chapter 5.1 "Sensors with an output signal of 4 to 20 mA (types 202636/55 and /60)", page 25	
	The measuring cable is broken	Replace the measuring cable	
	The sensor is faulty	Send the sensor to the manufacturer for inspection/reconditioning	
	The transmitter/controller is faulty	Send the transmitter/controller to the manufacturer for inspection/reconditioning	
Only for types 202636/75 and /80 (digital interface output signal)			
Green LED			
Lights flickering or not lighting up	The voltage is too low, therefore preventing the processor from working correctly	Set up the voltage supply according to the specifications in the section "Technical Data"	
	The sensor is faulty	Send the sensor to the manufacturer for inspection/reconditioning	
Orange LED			
Continuously lit	The sensor signal has a negative analyte value	Carry out maintenance on the sensor; refer to chapter 7 "Maintenance", page 36, or send the sensor to the manufacturer for inspection/reconditioning	
Regular flashing	The electrochemical cell is overloaded ***Overly high concentration of hydrogen peroxide or peracetic acid***	Check the system and rectify the errors. If necessary, calibrate the sensor or carry out maintenance	

9.2 Specific troubleshooting on the sensor

If the electrode finger has a bright silvery or white appearance, the sensor must be reconditioned by the manufacturer. Brown-gray colors are normal.

9.2.1 Testing the leak-tightness of the membrane cap

1. Carefully dry the outside of the membrane cap to be checked.
2. Prepare the membrane cap for mounting as described in chapter 6.2 "Initial filling and installation of the membrane cap", page 30 and fill it with electrolyte or clean water.
3. If necessary, dry the outside of the membrane cap again.
4. Slowly and carefully screw the membrane cap onto the sensor shaft as described in chapter 6.2 "Initial filling and installation of the membrane cap", page 30.
5. When screwing the membrane cap on, check if any liquid leaks through the membrane.

NOTE!

You must check carefully to determine that liquid does not leak through the membrane but that it escapes at the outlets designed for this purpose; repeat the leakage test if necessary.

– If liquid leaks through the membrane, the membrane is faulty and you must use a new membrane cap.
– If the membrane cap is leaking, you must check if the reference electrode was damaged when the measuring water and electrolyte were replaced. If the electrode finger has a bright silvery or white appearance, the measuring cell must be sent to the manufacturer for inspection.

9.2.2 Electronics test

Types with output signal 4 to 20 mA (202636/55 and /60)

1. Unscrew the membrane cap, as described in chapter 7 "Maintenance", page 36.
2. Carefully rinse the electrode finger and dry it carefully with a clean cloth.
3. Connect the sensor to the indicator/controller and wait for approx. 5 minutes.
4. Read the original signal from the measuring cells on the measuring device/controller or measure it with a digital multimeter.

   The measured value should be approx. 4 mA.

– If the sensor signal roughly corresponds to this value, the electronics are likely to be working correctly.
– If the measured value is significantly different from the value stated above, the sensor must be sent to the manufacturer for inspection.

9.2.3 Testing the zero point

NOTE!

The zero point should be tested after the electronics have been tested.

1. Prepare the sensor for startup; refer to chapter 6 "Startup", page 29.
2. Connect the sensor to the indicator/controller.
3. Carefully place the sensor in a beaker with clean tap water (without disinfectant).
4. Move the sensor around in the beaker for approx. 30 s (without creating air bubbles).
5. Leave the sensor in the beaker for >1 h and wait for the settling time to elapse.
6. Read the original signal on the measuring device/controller or measure it with a digital multimeter.

7. The sensor signal should be around the zero point.

– If the sensor signal tends towards zero, the zero point is very likely to be okay.
– If the measured value deviates significantly from zero, maintenance must be carried out on the sensor (refer to chapter 7 "Maintenance", page 36) and the "zero point test" must be repeated. Note that a recently cleaned working electrode (measuring electrode) has a relatively high zero point. In this case, the sensor will take a few days to reach its lowest zero point.
– If the measured value does not tend towards zero, even after maintenance has been carried out, the sensor must be sent to the manufacturer for inspection.

NOTE!

In general, the zero points of sensors with an extremely small measuring range, or which are more sensitive, are slightly higher than for sensors with large measuring ranges or which are less sensitive.

9.2.4 Measurement signal test

NOTE!

The signal should be tested after the zero point has been tested.

1. Add a little disinfectant to the water in the beaker (which was used in the section "Testing the zero point"; refer to chapter 9.2.3 "Testing the zero point", page 53).
2. With the sensor connected to the measuring device, move it around as evenly as possible in the beaker for at least five minutes.
3. Check to see if the measuring signal increases in this time.

– If the sensor signal increases, the sensor is likely to be working correctly. If the sensor does not react to the disinfectant, carry out maintenance on the sensor (refer to chapter 7 "Maintenance", page 36) before repeating the "signal test".
– If the sensor still does not react to the disinfectant after these steps have been carried out, it must be sent to the manufacturer for inspection.

9.2.5 Testing the environment

If the cause of the error cannot be clearly identified after carrying out the tests mentioned above, the following points in the area around the measuring chain must be tested:

- Flow
- Indicating device / controller
- Dosing device
- Correct calibration
- Pressure in the flow fitting
- Concentration of the disinfectant in the measured water (analysis)
- Measuring cable
- pH value of the measured water
- Temperature of the measured water
- Analysis
- Suitability of the sensor for measuring the dosed disinfectant
- Concentration of the disinfectant in the dosing tank

10.1 Sensors for peracetic acid (PAA)

Sensor type	202636/55 (output signal 4 to 20 mA)	202636/75 (digital interface output signal)
Area of application	All types of water treatment (e.g. bottle washing machine, CIP plant, rinser)	
	Control acids are tolerated, surfactants must not be present	Control acids and surfactants are tolerated
Measuring principle	Membrane-covered, amperometric, two-electrode system with integrated electronics	
Measuring cable connection	2-pin terminal connection (2 × 1 mm^2)	5-pin flange connector, M12
Voltage supply	U_B DC 12 to 30 V (galvanic isolation required)	U_B DC 22.5 to 26 V (galvanically isolated from the sensor)
Electromagnetic compatibility	According to EN 61326-1 interference emission: Class B interference immunity: industrial requirements	
Output signal	4 to 20 mA	Modbus RTU
Burden/current consumption	≤ (U_B - 7.5 V) ÷ 0.02 A	approx. 20 mA
Settling time	Approx 1 h for initial startup	
Inflow speed	Approx. 15 cm/s (entspricht to a flow of approx. 30 l/h when installed in the JUMO flow fitting (part no.: 00392611))	
Measuring ranges[a]	0.5 to 200 mg/l (ppm) 5 to 500 mg/l (ppm) 5 bis 2000 mg/l (ppm) 50 to 5000 mg/l (ppm) 50 to 20000 mg/l (ppm)	0.5 to 200 mg/l (ppm) 5 to 2000 mg/l (ppm) 50 to 20000 mg/l (ppm)
Resolution	0.1 mg/l with measuring range 200 mg/l 1 mg/l with measuring ranges 500/2000/ 5000 mg/l 10 mg/l with measuring range 20000 mg/l	0.1 mg/l with measuring range 200 mg/l 1 mg/l with measuring range 2000 mg/l 10 mg/l with measuring range 20000 mg/l
Response time t_{90}	approx. 3 minutes	approx. 5 minutes at 10 °C approx. 1.5 minutes at 45 °C
Operating temperature		
Measurement water	0 to 45 °C[b]	
Ambience	0 to 55 °C	
Temperature compensation	Automatic, using integrated temperature probe[c]	
pH value area of application	pH 1 to pH 6	
Zero point adjustment	Not required	
Slope adjustment	On evaluation unit/controller using analytical determination	
Disturbances	O_3: is recorded with a factor of 2500 of its measured value ClO_2: is recorded with a factor of 1 of its measured value H_2O_2: not a problem	
Influence of control acids	Sulphuric acid, nitric acid or phosphoric acid up to a concentration of 1 % in each case in the measuring water do not have any influence on the measurement behavior.	
Pressure resistance[d]	p_{abs} max. 2 bar p_{rel} max. 1 bar	
Materials	PVC-U, stainless steel 1.4571	

10 Technical data

Sensor type	202636/55 (output signal 4 to 20 mA)	202636/75 (digital interface output signal)
Dimensions	Dia. 25 mm, length 220 mm	Dia. 25 mm, length 205 mm
Weight	Approx. 125 g	

[a] Other measuring ranges upon request.
[b] Prerequisite: no ice crystals in the measurement medium.
[c] Prerequisite: no temperature jumps in the measurement medium.
[d] Pressure fluctuations are not admissible. Pressure-free operation (atmospheric pressure) recommended.

Maintenance	
Inspection of the measuring signal	Regularly, at least once a week
Replacement of membrane cap	Once a year (depending on the quality of the water)
Replacement of electrolyte	Every 3 to 6 months
Storage	
Sensor	Can be stored indefinitely in a frost-free and dry place, without electrolyte and between +5 and 40 °C
Membrane cap	Used membrane caps cannot be stored.
Electrolyte	In original bottle, away from sunlight, for at least one year at a temperature between +10 and 35 °C

10.2 Sensors for hydrogen peroxide (H_2O_2)

Sensor type	202636/60 (output signal 4 to 20 mA)	202636/80 (digital interface output signal)
Area of application	All types of water treatment, also seawater (e.g. bottle washing machine, CIP plant, rinser)	
	Surfactants must not be present	Surfactants are largerly tolerated
Measuring principle	Membrane-covered, amperometric, two-electrode system with integrated electronics	
Measuring cable connection	2-pin terminal connection (2 × 1 mm^2)	5-pin flange connector, M12
Voltage supply	U_B DC 12 to 30 V (galvanic isolation required)	U_B DC 22.5 to 26 V (galvanically isolated from the sensor)
Electromagnetic compatibility	According to EN 61326-1 interference emission: Class B interference immunity: industrial requirements	
Output signal	4 to 20 mA	Modbus RTU
Burden/current consumption	≤ (U_B - 7.5 V) ÷ 0.02 A	approx. 20 mA
Settling time	Approx 3 h for initial startup	
Inflow speed	Approx. 15 cm/s (entspricht to a flow of approx. 30 l/h when installed in the JUMO flow fitting (part no.: 00392611))	
Measuring ranges[a]	5 to 500 mg/l (ppm) 5 to 2000 mg/l (ppm) 50 to 10000 mg/l (ppm) 50 to 20000 mg/l (ppm)	50 to 20000 mg/l (ppm) 500 to 200000 mg/l (ppm)

Sensor type	202636/60 (output signal 4 to 20 mA)	202636/80 (digital interface output signal)
Resolution	0.1 mg/l with measuring range 500 mg/l 1 mg/l with measuring range 2000 mg/l 10 mg/l with measuring range 10000/ 20000 mg/l	10 mg/l with measuring range 20000 mg/l 100 mg/l with measuring range 200000 mg/l
Response time t_{90}	approx. 5 to 10 minutes	approx. 8 minutes
Operating temperature		
Measurement water	0 to 45 °C[b]	
Ambience	0 to 55 °C	
Temperature compensation	Automatic, using integrated temperature probe[c]	
pH value area of application	pH 2 to pH 11	
Zero point adjustment	Not required	
Slope adjustment	On evaluation unit/controller using analytical determination	
Disturbances	Cl_2, PES, O_3: must not be present Sulfides: contaminate the measuring system Phenol: aqueous solution > 3 % Phenol contaminates the measuring system	
Pressure resistance[d]	p_{abs} max. 2 bar p_{rel} max. 1 bar	
Materials	PVC-U, stainless steel 1.4571	
Dimensions	Dia. 25 mm, length 220 mm	Dia. 25 mm, length 205 mm
Weight	Approx. 125 g	

[a] Other measuring ranges upon request.

[b] Prerequisite: no ice crystals in the measurement medium.

[c] Prerequisite: no temperature jumps in the measurement medium.

[d] Pressure fluctuations are not admissible. Pressure-free operation (atmospheric pressure) recommended

Maintenance	
Inspection of the measuring signal	Regularly, at least once a week
Replacement of membrane cap	Once a year (depending on the quality of the water)
Replacement of electrolyte	Every 3 to 6 months
Storage	
Sensor	Can be stored indefinitely in a frost-free and dry place, without electrolyte and between +5 and 40 °C
Membrane cap	Used membrane caps cannot be stored.
Electrolyte	In original bottle, away from sunlight, for at least one year at a temperature between +10 and 35 °C

11 Annex

11.1 Suitable titration methods

For the determination of the reference value during the calibration of the sensors, we recommend the procedure described below for titration.

– For determination of **hydrogen peroxide** (H_2O_2), only the **1st titration stage** has to be performed.
– For determination of **peracetic acid** (PAA), the **1st and the 2nd titration stage** have to be performed.

Please note:

- The titration must be performed quickly.
- After the first addition of potassium permanganate it may take a few seconds before the sample takes up the colour.
- Renewed colouration of the sample after completion of the 2nd titration stage is disregarded.
- In the 1st titration stage a great excess of potassium permanganate (strong violet colouration of the sample) must be avoided.

Materials required

Measuring ranges up to 200 ppm	**Measuring ranges >200 up to 2,000 ppm**	**Measuring ranges >2,000 up to 20,000 (200,000[a]) ppm**
• Sample of the water being measured 25 ml	• Sample of the water being measured 25 ml	• Sample of the water being measured 5 ml
• Sulphuric acid (25 %)	• Sulphuric acid (25 %)	• Sulphuric acid (25 %)
• Potassium permanganate (0.01 N)	• Potassium permanganate (0.01 N)	• Potassium permanganate (0.1 N)
• Potassium iodide 0.3 to 0.5 g (powder)	• Potassium iodide 0.3 to 0.5 g (powder)	• Potassium iodide 0.3 to 0.5 g (powder)
• Thiosulphate (0.01 N)	• Thiosulphate (0.1 N)	• Thiosulphate (0.1 N)
• Starch solution (1 %)	• Starch solution (1 %)	• Starch solution (1 %)

[a] For the sensor with the measuring range 200,000 ppm (20 %), the sample water must be diluted by a factor of 10 with fully demineralized water.

1st titration stage

1. Add 20 ml sulphuric acid to the sample of the water being measured.
2. Stirring continuously, titrate with potassium permanganate until the sample turns **faintly violet**.

Stop the addition of potassium permanganate immediately when the sample begins to turn violet!

A further addition of potassium permanganate would also be determined in the 2nd titration stage as peracetic acid and thus falsify the result.

3. Make a note of the consumption **(A)** of potassium permanganate in ml.

2nd titration stage

1. After the 1st titration stage, add potassium iodide.
2. Stirring continuously, titrate with thiosulphate until the sample turns **pale yellow**.
3. Add 2 ml starch solution.
   The sample turns blue.
4. Stirring continuously, titrate with thiosulphate until the sample turns colourless.
5. Make a note of the consumption **(B)** of thiosulphate in ml.

Calculation for hydrogen peroxide (H_2O_2)

Measuring ranges up to 200 ppm	Measuring ranges >200 up to 2,000 ppm	Measuring ranges >2,000 up to 20,000 ppm
A × 6.8 = Concentration in ppm	**A** × 68 = Concentration in ppm	**A** × 340 = Concentration in ppm

Measuring range 200,000 ppm
A × 3,400 = Concentration in ppm

Calculation for peracetic acid (PAA)

Measuring ranges up to 200 ppm	Measuring ranges >200 up to 2,000 ppm	Measuring ranges >2,000 up to 20,000 ppm
B × 15.2 = Concentration in ppm	**B** × 152 = Concentration in ppm	**B** × 760 = Concentration in ppm

部件名称 Product group: 202630/31/34/36	有毒有害物质或元素 Hazardous substances					
	铅（Pb）	汞（Hg）	镉（Cd）	六价铬（Cr(VI)）	多溴联苯（PBB）	多溴二苯醚（PBDE）
外壳 Housing (Gehäuse)	○	○	○	○	○	○
过程连接 Process connection (Prozessanschluss)	○	○	○	○	○	○
-螺母 Nut (Mutter)	○	○	○	○	○	○
螺钉 Screw (Schraube)	○	○	○	○	○	○

本表格依据 SJ/T 11364-2014的规定编制。
(This table is prepared in accordance with the provisions of SJ/T 11364-2014.)
O：表示该有害物质在该部件所有均质材料中的含量均在 GB/T 26572 规定的限量要求以下。
(O: Indicates that said hazardous substance contained in all of the homogeneous materials for this part is below the limit requirement of GB/T 26572.)
X：表示该有害物质至少在该部件的某一均质材料中的含量超出 GB/T 26572 规定的限量要求。
(X: Indicates that said hazardous substance contained in one of the homogeneous materials used for this part is above the limit requirement of GB/T 26572.)

JUMO GmbH & Co. KG
Street address:
Moritz-Juchheim-Straße 1
36039 Fulda, Germany
Delivery address:
Mackenrodtstraße 14
36039 Fulda, Germany
Postal address:
36035 Fulda, Germany
Phone: +49 661 6003-0
Fax: +49 661 6003-607
Email: mail@jumo.net
Internet: www.jumo.net

JUMO Instrument Co. Ltd.
JUMO House
Temple Bank, Riverway
Harlow, Essex, CM20 2DY, UK
Phone: +44 1279 63 55 33
Fax: +44 1279 62 50 29
Email: sales@jumo.co.uk
Internet: www.jumo.co.uk

JUMO Process Control, Inc.
6733 Myers Road
East Syracuse, NY 13057, USA
Phone: +1 315 437 5866
Fax: +1 315 437 5860
Email: info.us@jumo.net
Internet: www.jumousa.com