JUMO tecLine ClO_2 and O_3

Sensors for chlorine dioxide (ClO_2) and ozone (O_3)
Typ 202634



Operating Manual

20263400T90Z001K000

V4.00/EN/00585740/2025-05-05

Table of contents

1 Introduction 6

1.1 Safety information 6
1.1.1 General Information 6
1.1.2 Warning symbols 6
1.1.3 Note symbols 6

2 Description 7

2.1 Areas of application 7
2.2 Structure 7
2.3 Output signal 7
2.4 Suitable indicators/transmitters/controllers 8
2.5 Sensor details 9
2.6 Important information for use 11
2.6.1 Notes for all types 11
2.6.2 Notes for types with hydrophobic membranes (202634/45, /50, /60, /65) 11

3 Identifying the device version 13

3.1 Nameplate 13
3.2 Order details 14
3.3 Scope of delivery 14
3.4 Accessories 15

4 Mounting 17

4.1 Important information 17
4.2 Combination fitting (type 202811/10) 19
4.2.1 Mounting the combination fitting 19
4.2.2 Installing the sensor 20
4.3 Flow fitting for membrane-covered sensors (type 202811/30) 22
4.3.1 Mounting the fitting 22
4.3.2 Installing the sensor 23
4.4 Flow monitor for disinfection measurands (type 202811/20) 24
4.4.1 Mounting the flow monitor 24

5 Electrical connection 25

5.1 Sensors with an output signal of 4 to 20 mA (types 202634/45, /47, /50, and /52) 25
5.1.1 General requirements 25
5.1.2 Terminal assignment 25
5.1.3 Connection 25
5.2 Sensors with digital interface output signal (types 202634/60, /62, /65, and /67) 27
5.2.1 General requirements 27
5.2.2 Terminal assignment 27
5.3 Flow monitoring (combination fitting and flow monitor) 27
5.3.1 Terminal assignment 27

Table of contents

5.4 Combination fitting temperature probe 27
5.4.1 Terminal assignment 27
5.5 Example of a measuring section with the sensor type 202634/45 28
5.5.1 General information 28
5.5.2 Connection example 28

6 Startup 29

6.1 Important notes for screwing the membrane cap on and off 29
6.2 Initial filling and installation of the membrane cap 30
6.2.1 Types with hydrophobic membranes (202634/45, /50, /60, /65) 30
6.2.2 Types with membranes that are insensitive to chemicals (202634/47, /52, /62, /67) 32
6.3 Minimum inflow 34
6.3.1 Adjusting the minimum inflow (combination fitting and flow monitor) 34
6.4 Settling time 34

7 Calibration 35

7.1 General information 35
7.2 Calibrating with an indicator/controller 35

8 Removal 36

9 Maintenance 37

9.1 Replacing the electrolyte 37
9.1.1 Types with hydrophobic membranes (202634/45, /50, /60, /65) 37
9.1.2 Types with membranes that are insensitive to chemicals (202634/47, /52, /62, /67) 39
9.2 Replacing the membrane cap 41
9.2.1 Types with hydrophobic membranes (202634/45, /50, /60, /65) 41
9.2.2 Types with membranes that are insensitive to chemicals (202634/47, /52, /62, /67) 43
9.3 Removing calcium deposits from the membrane cap 45
9.4 Storage 45
9.5 Consumable material 46

10 Overcoming errors and malfunctions 47

10.1 General troubleshooting 47
10.2 Specific troubleshooting on the sensor 49
10.2.1 Testing the leak-tightness of the membrane cap 49
10.2.2 Electronics test 49
10.2.3 Testing the zero point 49
10.2.4 Measurement signal test 50
10.2.5 Testing the environment 50

Table of contents

11 Technical data 51

11.1 Sensors for chlorine dioxide (ClO_2) 51
11.1.1 Version with output signal 4 to 20 mA (type 202634/45) 51
11.1.2 Version with digital interface output signal (type 202634/65) 52
11.2 Sensors for chlorine dioxide (ClO_2) with membranes that are insensitive to chemicals 53
11.2.1 Version with output signal 4 to 20 mA (type 202634/47) 53
11.2.2 Version with digital interface output signal (type 202634/67) 54
11.3 Sensors for ozone (O_3) 55
11.3.1 Version with output signal 4 to 20 mA (type 202634/50) 55
11.3.2 Version with digital interface output signal (type 202634/60) 56
11.4 Sensors for ozone (O_3) with membranes that are insensitive to chemicals 57
11.4.1 Version with output signal 4 to 20 mA (type 202634/52) 57
11.4.2 Version with digital interface output signal (type 202634/62) 58
11.5 All sensors 59
11.5.1 Maintenance, storage, and transport 59

12 China RoHS 60

1 Introduction

1.1 Safety information

1.1.1 General Information

This manual contains information that must be observed in the interest of your own safety and to avoid material damage. This information is supported by symbols which are used in this manual as indicated.

Please read this manual before starting up the device. Store this manual in a place that is accessible to all users at all times.

If difficulties occur during startup, please do not intervene in any way that could jeopardize your warranty rights!

1.1.2 Warning symbols



WARNING!

This symbol in connection with the signal word indicates that **personal injury** may occur if the respective precautionary measures are not carried out.

NOTICE!

This note in connection with the signal word indicates that **material damage or data loss** will occur if the respective precautionary measures are not taken.

1.1.3 Note symbols



NOTE!

This symbol refers to **important information** about the product, its handling, or additional benefits.

2.1 Areas of application

These membrane-covered amperometric sensors are used to determine the concentration of chlorine dioxide or ozone in water.

Typical areas of application include the monitoring of swimming pool, drinking, service, process, and cooling water.

The sensors with hydrophobic PTFE membranes (types 202634/45, /65, /50, and /60) can only be used in media of swimming pool or drinking water quality.

The sensors with membranes that are insensitive to chemicals and surfactants (types 202634/47, /67, /52, and /62) can be used in media with almost all water qualities.

NOTE!

Solid materials in the media clog up the membrane and prevent the sensors from working correctly.

NOTE!

Calcium oxide can block the membrane.

NOTE!

The sensors are not suitable for detecting the absence of chlorine dioxide or ozone.

2.2 Structure

The sensors have a membrane-covered, amperometric two-electrode measuring system.

The working electrodes (cathodes) are made of gold (Au). The anodes, which perform the role of a combined reference and counter electrode, are made of silver (Ag) and have a silver halide (AgHal) coating.

For the measuring methods used here, chlorine dioxide or ozone diffuses through the membrane from the measurement medium and, combined with the electrolytes, triggers an electrical signal at the working electrode. This signal is proportional to the concentration of chlorine dioxide or ozone and is amplified by the electronics. The measurement signal is mainly independent of the temperature of the media thanks to integrated temperature compensation.

2.3 Output signal

As the measurement signal of the amperometric sensors is temperature-dependent, an automatic temperature compensation is carried out by an integrated NTC resistor. The recommended temperature range is 0[1] to +45 °C.

In the analog versions, the integrated sensor electronics provide a current signal of 4 to 20 mA, and in the digital versions, they provide a Modbus RTU interface signal.

Calibration is carried out in a downstream device (indicator, controller, recorder, PLC, etc.).

The sensors can be connected directly to any suitable indicators and controllers. They provide the voltage required for supplying the sensors and allow for easy calibration of the measuring systems.

[1] Prerequisite: no ice crystals in the measuring water.

2 Description

2.4 Suitable indicators/transmitters/controllers

Type	Features	Suitable sensors
JUMO AQUIS 500 AS	Single-channel (4 to 20 mA) indicating device/controller, additional temperature input, binary input, up to 2 analog and switching outputs	Types 202634/45, /47, /50, and /52 (output signal of 4 to 20 mA)
JUMO AQUIS 500 RS	Single-channel (Modbus RTU) indicating device/controller, additional temperature input, binary input, up to 2 analog and switching outputs	Types 202634/60, /62, /65, and /67 (digital interface)
JUMO dTRANS AS 02	Modular multichannel transmitter/controller for standard signals, PROFIBUS-DP, RS422/485, data logger using optional boards	Types 202634/45, /47, /50, and /52 (output signal of 4 to 20 mA)
JUMO AQUIS touch S/P	Modular multichannel measuring devices for liquid analysis with integrated controller and paperless recorder, USB host, USB device, Modbus, PROFIBUS DP, and Ethernet using optional boards	All types 202634

2.5 Sensor details

Types 202634/45 and /50
4 to 20 mA version

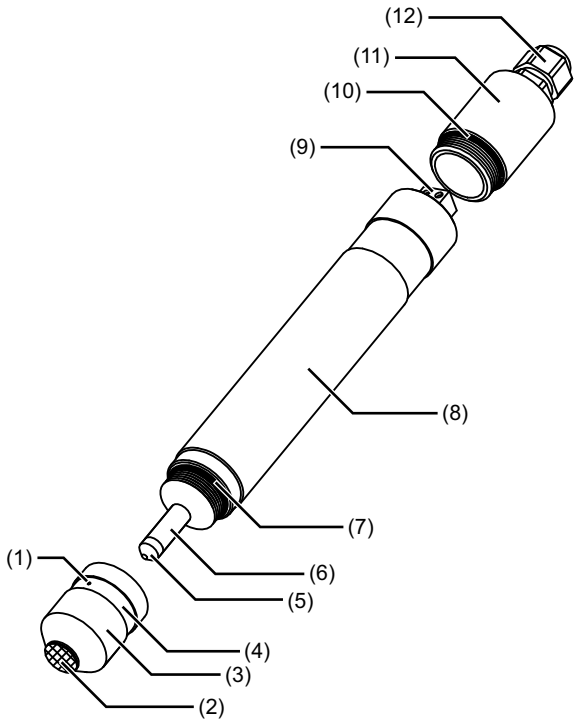

Types 202634/60 and /65
Modbus RTU version

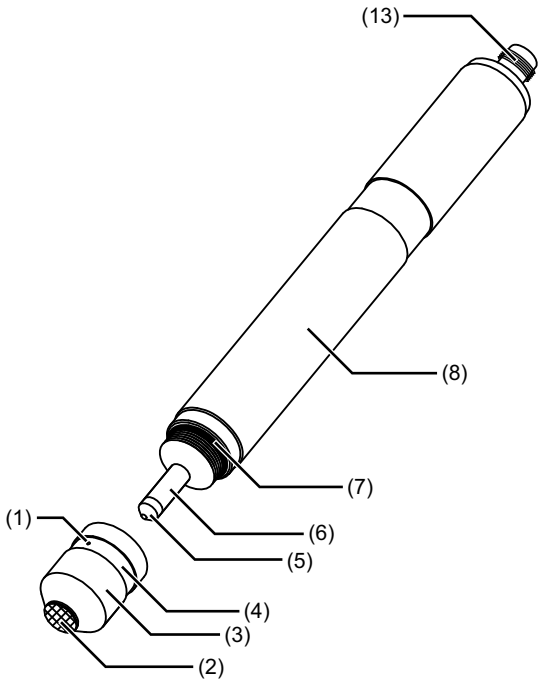

(1) Valve opening
(2) PTFE membrane
(3) Membrane cap
(4) Transparent cover (hose ring)
(5) Measuring electrode
(6) Electrode finger (reference electrode)
(7) O-ring
(8) Sensor shaft with integrated electronic components
(9) 2-pole terminal for measuring cable connection
(10) O-ring
(11) Cover
(12) Pg screw connection
(13) M12 flange connector

2 Description

Types 202634/47 and /52
4 to 20 mA version,
membrane that is insensitive to chemicals

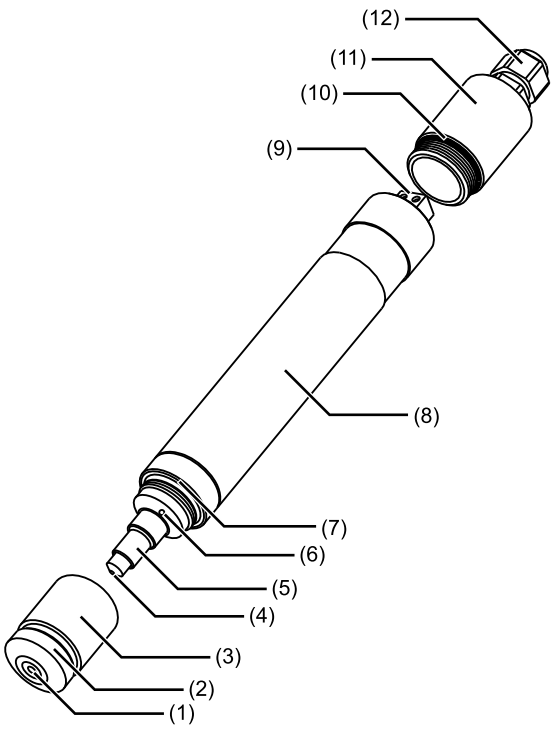

Types 202634/62 and /67
Modbus RTU version,
membrane that is insensitive to chemicals

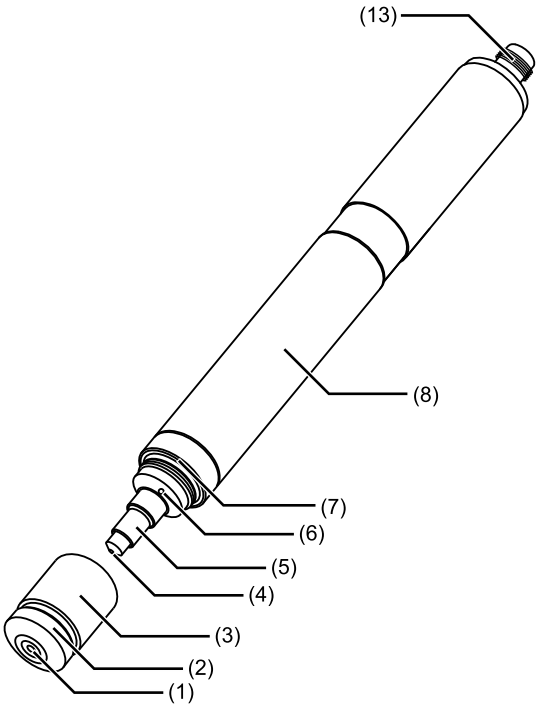

(1) Membrane disk
(2) Membrane holder (stainless steel)
(3) Membrane cap
(4) Working electrode of the electrode finger
(5) Reference electrode of the electrode finger
(6) Pressure equalization opening
(7) O-ring
(8) Sensor body with integrated electronic components
(9) 2-pole terminal for measuring cable connection
(10) O-ring
(11) Cover
(12) Pg screw connection
(13) M12 flange connector

2.6 Important information for use

2.6.1 Notes for all types

NOTICE!

An unsuitable measuring environment may produce incorrect measurement results.

Using the sensors without the use of suitable flow fittings will lead to incorrect measurement results.

▶ In order to ensure error-free measurements, the sensors must be installed in suitable flow fittings, see chapter 4.2 "Combination fitting (type 202811/10)", Page 19 or chapter 4.3 "Flow fitting for membrane-covered sensors (type 202811/30)", Page 22.

NOTICE!

Incorrect handling may cause damage to the membrane caps.

Screwing an unfilled membrane cap fully onto the sensor before startup may cause mechanical damage to the membrane. In addition, screwing on a filled membrane cap without placing the sensor into the measurement media can cause salt or gel residues to be deposited.

▶ Screwing on the membrane cap without then starting up the sensor should be avoided.

NOTICE!

The membranes may be damaged by high pressure.

Operating the sensors with increased pressure may cause the membranes to rip.

▶ The sensors should be operated under as little pressure as possible, with the measurement media able to flow freely. If this is not possible, the sensors can be operated under a **constant** pressure of up to 1 bar (relative pressure) or 2 bar (absolute pressure). Fluctuations in pressure must be avoided.

2.6.2 Notes for types with hydrophobic membranes (202634/45, /50, /60, /65)

The sensor membranes are made of hydrophobic, microporous PTFE material. These sensors should only be used in water which has the qualities of drinking or swimming pool water. Under no circumstances should the water contain surfactants (contained in some cleaning agents and disinfectants). Surfactants destroy the hydrophobic properties of the membrane. It can therefore no longer be guaranteed that the sensors will work correctly.

The sensors for chlorine dioxide provide an alternative for measurement solutions containing surfactant with membranes that are insensitive to chemicals (types 202634/47 and 202634/67) or the sensors for ozone with membranes that are insensitive to chemicals (types 202634/52 and 202634/62).

NOTICE!

Unsuitable measurement media may produce incorrect measurement results.

Using the sensors to measure contaminated media may lead to incorrect measurement results.

▶ In order to ensure error-free measurements, the measurement media must have the qualities of swimming pool or drinking water and must not contain any solids.

NOTICE!

Irritating substances may produce incorrect measurement results.

Using the sensors to measure media containing surfactants may lead to incorrect measurement results.

▶ In order to ensure error-free measurements, the measurement media must not contain surfactants (surface-active substances e.g. from detergents, cleaning agents or disinfectants).

NOTICE!

Harmful substances may lead to incorrect measurement results and cause damage to the membrane caps.

Using the sensors to measure media containing hydrophobic substances may lead to incorrect measurement results. Hydrophobic substances can damage the membrane caps.

▶ In order to ensure error-free measurements, the measurement media must not contain hydrophobic substances (e.g. oil or grease).

3.1 Nameplate

Position

The nameplate is glued to the top of the sensor.

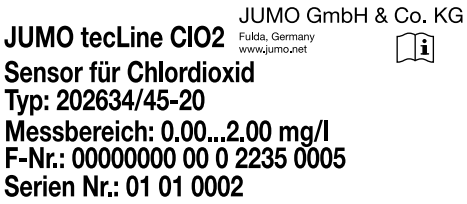

Table of contents

The nameplate contains important information. This includes:

Description	Designation on the nameplate	Example
Device type	Type	202634/45-20
Fabrication number	F no.	000000000002235000500

Device type (Typ)

Compare the specifications on the nameplate with your order documents. The supplied device version can be identified using the order code in chapter 3.2 "Order details", Page 14.

Fabrication number (F-Nr.)

The fabrication number provides information such as the **production date** (year/week). The figures in question are in positions 12, 13, 14, and 15 (from the left).

Example: F no. = 000000000002235**0**0005. The device was produced in the year 20**22**, in the **35**th week.

3 Identifying the device version

3.2 Order details

	(1)	**Basic type**
202634		JUMO tecLine ClO2 + O3
		Sensors for chlorine dioxide and ozone
	(2)	**Basic type extension**
45		Sensor for chlorine dioxide, output signal 4 to 20 mA
47		Sensor for chlorine dioxide, output signal 4 to 20 mA, insensitive to chemicals and surfactants
50		Sensor for ozone, output signal 4 to 20 mA
52		Sensor for ozone, output signal 4 to 20 mA, insensitive to chemicals and surfactants
60		Sensor for ozone, digital output signal
62		Sensor for ozone, digital output signal, insensitive to chemicals and surfactants
65		Sensor for chlorine dioxide, digital output signal
67		Sensor for chlorine dioxide, digital output signal, insensitive to chemicals and surfactants
	(3)	**Measuring range**[a]
10		0 to 0.5 mg/l (ppm)
20		0 to 2 mg/l (ppm)
25		0 to 5 mg/l (ppm)
35		0 to 10 mg/l (ppm)
37		0 to 20 mg/l (ppm)

[a] Other measuring ranges upon request.

	(1)		**(2)**		**(3)**
Order code		/		-	
Order example	202634	/	45	-	20

3.3 Scope of delivery

Types 202634/45, /47, /50 and /52	Two-wire sensor, incl. membrane cap, electrolyte, special abrasive paper for cathode cleaning and operating manual
Types 202634/60, /62, /65 and /67	Modbus RTU sensor, incl. membrane cap, electrolyte, special abrasive paper for cathode cleaning and operating manual

3.4 Accessories

Fittings

Description	Part no.
Combination fitting for mounting several electrochemical sensors[a]	00607325
Individual fitting for mounting a membrane-covered sensor	00392611
Mounting bracket for individual fitting	00455706
Flow monitor for monitoring the minimum inflow[b]	00605507

[a] With integrated flow monitor, mini ball valve included.
[b] For flow monitoring in connection with the individual fitting.

Spare part sets and electrolytes

Description	Part no.
Spare part set for 202634/45, /50, /60 and /65 (1 x membrane cap, fine abrasive paper)	00392331
Spare part set for 202634/47 and /67 (1 x membrane cap, fine abrasive paper)	00753804
Spare part set for 202634/52 and /62 (1 x membrane cap, fine abrasive paper)	00762731
Special electrolyte for 202634/45, /47, /65, and /67 (100 ml)	00392332
Special electrolyte for 202634/50, /52, /60, and /62 (100 ml)	00392333

Accessories for sensors with a digital interface (type 202634/60, /62, /65, /67)

Description	Part no.
JUMO digiLine hub[a]	00646871
JUMO power supply unit for JUMO digiLine hub[a]	00661597
1.5 m connecting cable, 5-pole M12 connector, A-coded on the ferrules	00638333
5 m connecting cable, 5-pole M12 connector, A-coded on the ferrules	00638337
10 m connecting cable, 5-pole M12 connector, A-coded on the ferrules	00638341

[a] When connecting multiple sensors with a digital interface (type 20263x) to the JUMO AQUIS touch S/P, the JUMO digiLine hub and an external power supply (e.g. part no. 00661597) are required. For further accessories see data sheet 202705.

Transmitters/controllers for sensors with an output signal of 4 to 20 mA (type 202634/45, /47, /50, /52)

Designation	Part no.
JUMO AQUIS 500 AS, type 202568/20-888-888-888-310-310-23/000 (for further versions, please refer to data sheet 202568) 	00528718
JUMO dTRANS AS 02, type: 202553/01-8-01-4-0-00-23/000 (fur further versions, please refer to data sheet 202553) 	00550842
JUMO AQUIS touch S/P 	Refer to data sheets 202580/81

3 Identifying the device version

Transmitters/controllers for sensors with a digital interface (type 202634/60, /62, /65, /67)

Designation	Part no.
JUMO AQUIS 500 RS, type 202569/20-654-888-888-310-310-23/000 (for further versions, please refer to data sheet 202569) 	00602275
JUMO AQUIS touch S/P 	Refer to data sheets 202580/81

4.1 Important information

NOTICE!

An unsuitable measuring environment may produce incorrect measurement results.

Using the sensors without the use of suitable flow fittings will lead to incorrect measurement results.

▶ In order to ensure error-free measurements, the sensors must be installed in suitable flow fittings, see chapter 4.2 "Combination fitting (type 202811/10)", Page 19 or chapter 4.3 "Flow fitting for membrane-covered sensors (type 202811/30)", Page 22.

NOTICE!

The membranes may be damaged by high pressure.

Operating the sensors with increased pressure may cause the membranes to rip.

▶ The sensors should be operated under as little pressure as possible, with the measurement media able to flow freely. If this is not possible, the sensors can be operated under a **constant** pressure according to the specifications in chapter 11 "Technical data", Page 51. Fluctuations in pressure must be avoided.

NOTICE!

Air bubbles may lead to incorrect measurement results.

The presence of air bubbles in the measurement medium in front of the membrane may produce incorrect measurement results.

▶ In order to ensure error-free measurements, the measurement media must be free of air bubbles.

NOTICE!

Interruptions in the voltage supply may produce incorrect measurement results.

An interruption in the voltage supply (e.g. in interval operation) may produce incorrect measurement results. The sensors require a settling time period to determine the correct measurement.

▶ In order to ensure error-free measurements, the sensors and transmitters must be permanently supplied with voltage, even in interval operation.

NOTICE!

Dry electrolytes may produce incorrect measurement results.

If there is no medium to measure when the membrane cap is filled, a build-up of salt on the inside of the membrane may cause incorrect measurement results.

▶ For sensors with electrolyte-filled membrane caps, the sensor fittings should be prevented from draining or dry running.

NOTICE!

Deposits on the membrane may lead to incorrect measurement results.

If there is no disinfectant (chlorine dioxide or ozone) in the measurement medium for more than 24 hours, this will lead to incorrect measurement results due to deposits (biofilm) on the membrane.

▶ Avoid operating the sensors with measurement medium which does not contain a disinfectant. After operation in a disinfectant-free medium, a settling time period is to be expected. The dosing may need to be switched on after a delay.

4 Mounting

NOTICE!

Impurities may produce incorrect measurement results.

Using the sensors to measure media containing oxidants, reducing agents or corrosion protection agents may lead to incorrect measurement results.

▶ Oxidizing agents, reducing agents, corrosion inhibitors, and substances which result in cross sensitivities with the sensors (see information in chapter 11 "Technical data", Page 51) must be avoided in the measurement medium.

NOTE!

If no disinfectant is dosed over a long period of time, the sensors must be disconnected from the transmitter/controller, removed and stored correctly; please refer to chapter 9.4 "Storage", Page 45.

4.2 Combination fitting (type 202811/10)

4.2.1 Mounting the combination fitting

The combination fitting can be mounted on a wall or an installation panel with the mounting holes (1) using two commercially available M5 cylinder head screws (dia. 5.5 mm, countersink according to DIN 974-1: dia. 11 mm, 5 mm deep, not included in the scope of delivery).

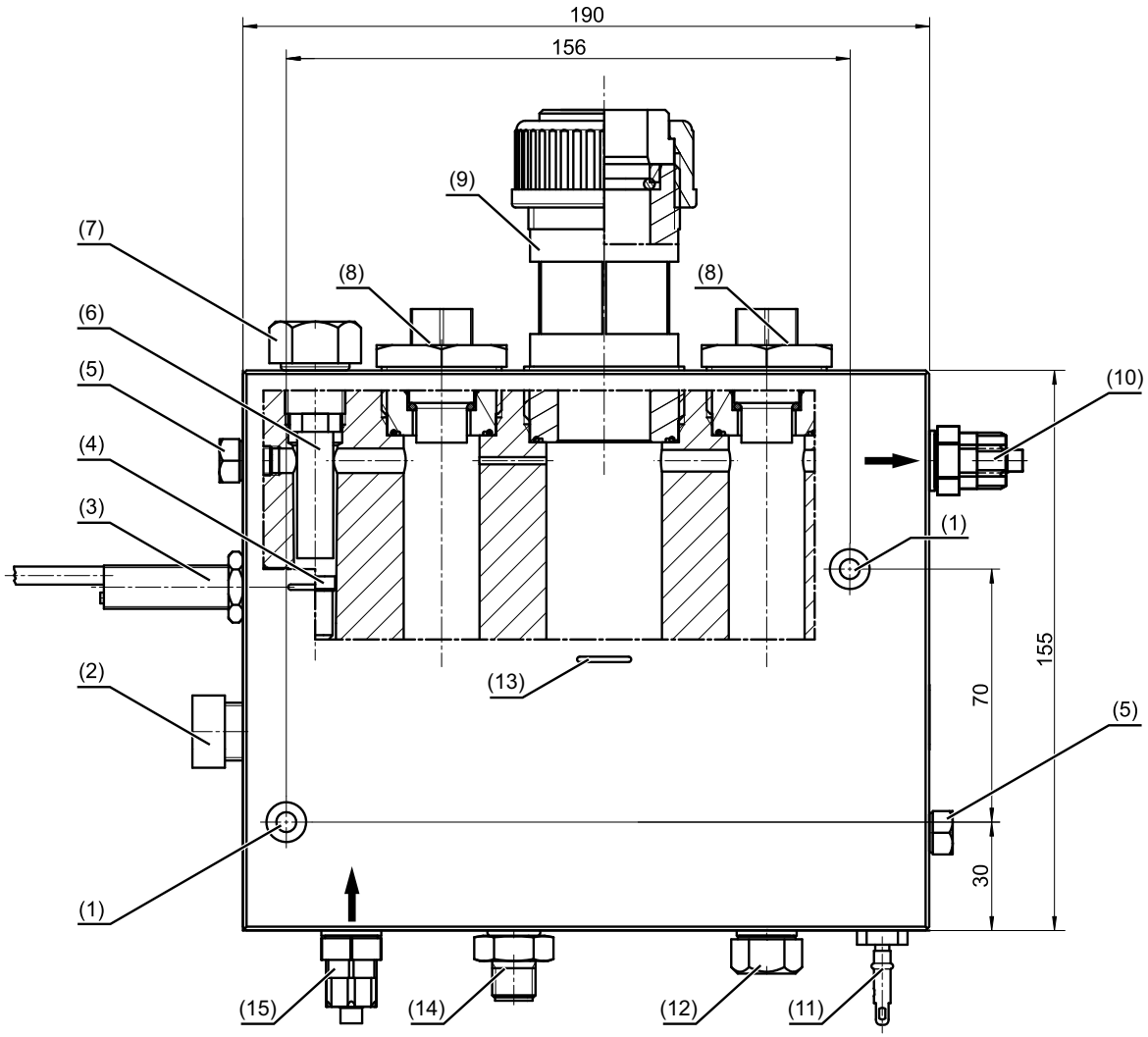

(1) Mounting hole for cylinder head screws M5 (dia. 5.5 mm; countersink: dia. 11 mm, 5 mm deep)
(2) Valve insert for flow control
(3) Inductive proximity sensor[a](flow monitoring), M12 x 1 thread
(4) Floating body for flow monitoring[a]
(5) Sealing screw M8
(6) Extension for M8 sealing screw
(7) Sealing screw G 3/8
(8) Mounting closed with dummy plug for pH/Redox sensor with Pg 13.5 thread
(9) Mounting for membrane-covered sensor with dia. 25 mm
(10) Hose connection for measuring water outflow, connection G 1/4, for hose 6 × 8 (inner dia. 6 mm, outer dia. 8 mm)
(11) M8 ground rod[a]

(12) Sealing screw G 1/4 (opening for optional mini ball valve for sampling)
(13) Indicator for sensor immersion depth
(14) Temperature probe[a]
(15) Hose connection for measuring water inflow, connection to fitting G 1/4, for hose 6 × 8 (inner dia. 6 mm, outer dia. 8 mm)

[a] optionally

4.2.2 Installing the sensor

Overview

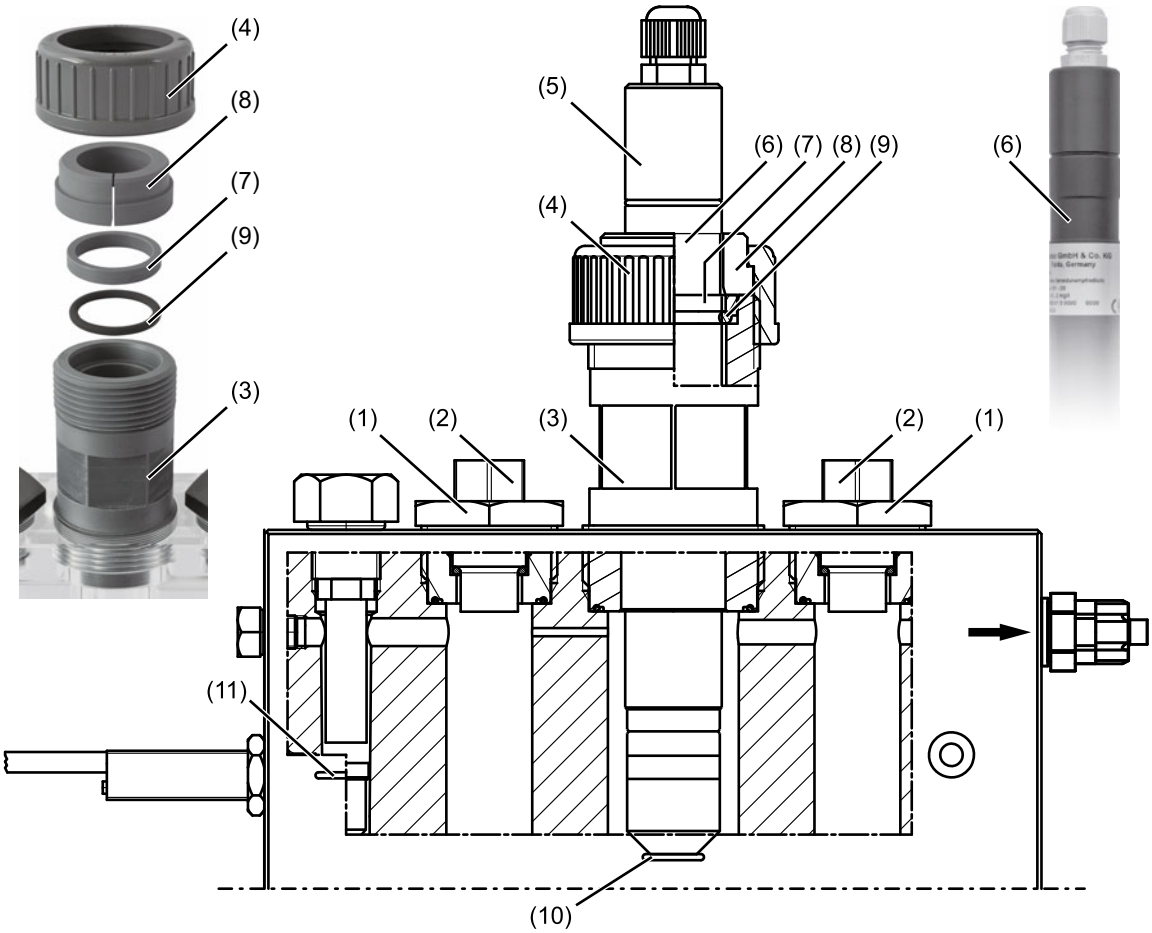

(1) Mounting for pH/Redox sensors
(2) Pg 13.5 pressure screw
(3) Mount for membrane-covered sensor
(4) Union nut
(5) Membrane-covered sensor
(6) Sensor groove
(7) Pressure ring
(8) Stepped collar
(9) O-ring
(10) Mark for sensor immersion depth
(11) Mark for floating body height

Installation

NOTICE!

Leaks due to incorrect installation

Dirt on the thread of the union nut (4), on the pressure ring (7), on the stepped collar (8), on the O-ring (9) or a hardened O-ring may cause the fitting to leak when the sensor (5) is installed.

▶ When assembling or installing the sensor, make sure that the components, O-rings, and threads are clean and in good working order.

1. Before installing the sensors, make sure that the system is depressurized.
2. Close the shut-off valves in the inlet and outlet of the fitting.
3. Unscrew the union nut (4).
4. Remove stepped collar (8).
   The pressure ring (7) and O-ring (9) remain in the sensor holder (3).
5. From above, slide the stepped collar onto the sensor (5) until it engages in the sensor groove (6).
   It should now be easy to turn the stepped collar on the sensor housing.
6. Insert the sensor with the mounted stepped collar into the sensor holder (3) up to the limit stop.
7. Screw the union nut (4) onto the sensor holder again and tighten until handtight.

4 Mounting

4.3 Flow fitting for membrane-covered sensors (type 202811/30)

4.3.1 Mounting the fitting

The flow fitting can be mounted to a wall or an installation panel using an optional mounting bracket (part no.: 00455706).

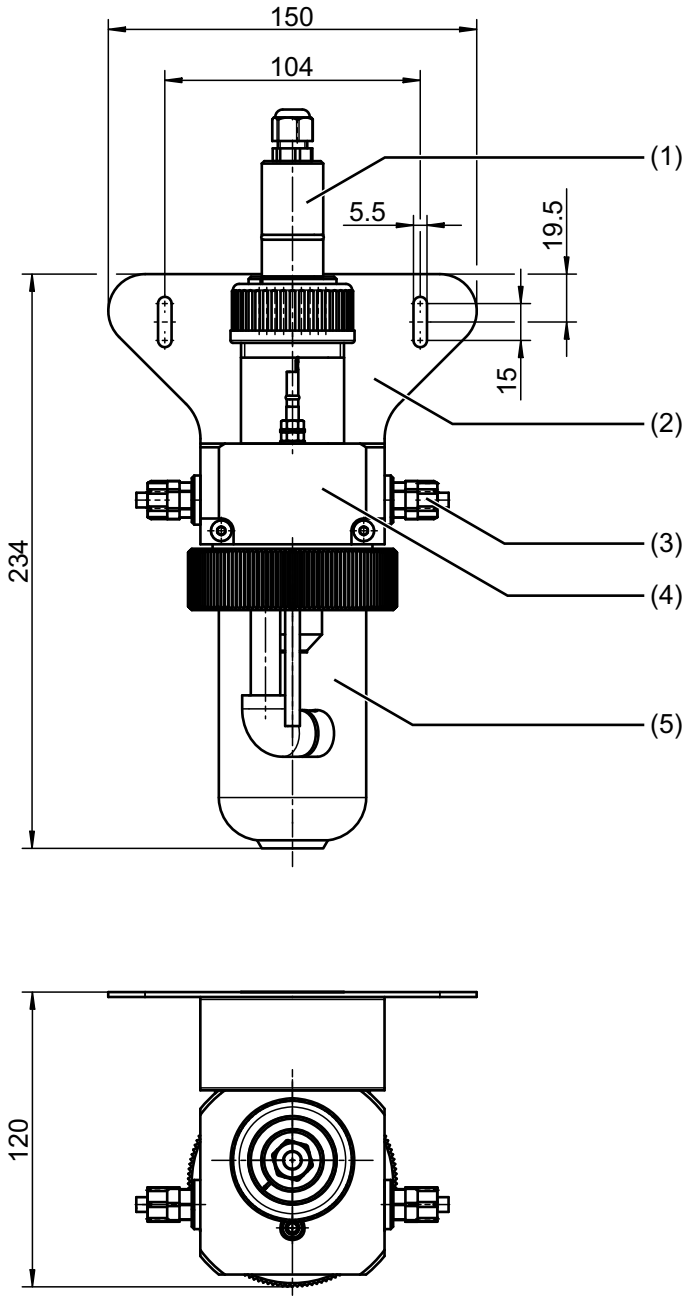

(1) Sensor
(2) Mounting bracket (optional)
(3) Connection G 1/4, for hose Ø 8 mm × 6 mm
(4) Fitting
(5) Removable measuring vessel (inspection glass)

4.3.2 Installing the sensor

Overview

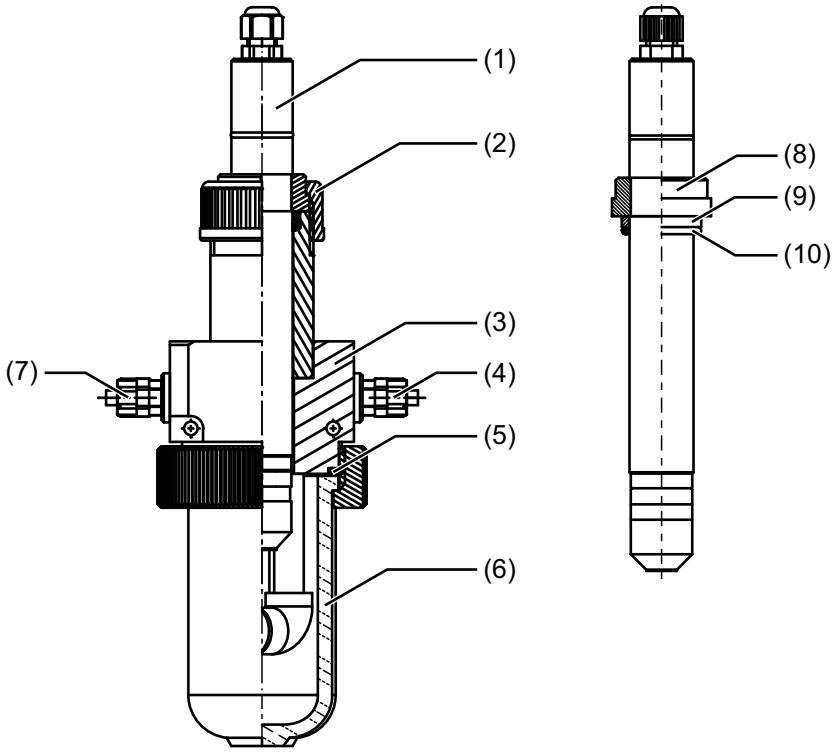

(1) Sensor
(2) Union nut
(3) Fitting housing
(4) G 1/4 A or DN 10 outlet lead
(5) O-ring
(6) Inspection glass
(7) G 1/4 A or DN 10 supply lead
(8) 1-inch stepped collar[a]
(9) Pressure ring[a]
(10) O-ring[a]

[a] Component of the flow fitting

Installation

NOTICE!

Incorrect installation may cause leaks.

Pollutants on the thread of the union nut (2) or the O-rings (5, 10), or hardened O-rings can cause the fitting to leak when the sensor (1) is installed.

▶ When assembling or installing the sensor, you must ensure that the O-rings and threads are clean and in good working order.

NOTE!

The inspection glass (6) can be unscrewed from the fitting housing (3) for maintenance purposes.

1. First push the O-ring (10), then the pressure ring (9) and then the 1-inch stepped collar (8) onto the sensor (1) (from the Pg screw connection). The stepped collar (8) must snap into the groove.
2. Once the sensor has been prepared in this way, insert it into the flow fitting housing (3) and fix it in place with the union nut (2).

4 Mounting

4.4 Flow monitor for disinfection measurands (type 202811/20)

4.4.1 Mounting the flow monitor

The flow monitor can be mounted to a wall or an installation panel using the **PP-40 pipe clip** (2) included in the scope of delivery.

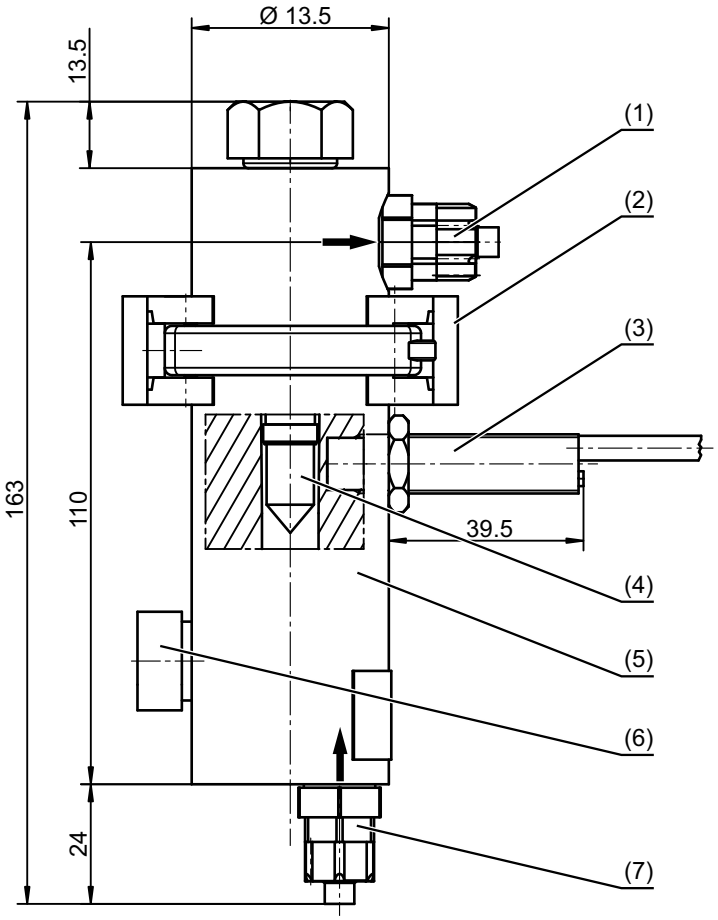

(1) Hose connection for measuring water outflow, connection G 1/4, for hose 6 × 8 (inner dia. 6 mm, outer dia. 8 mm)

(2) **PP-40 pipe clip**

(3) Inductive proximity sensor, M12 x 1 thread

(4) Floating body

(5) Flow body

(6) Needle valve insert for flow control

(7) Hose fitting for measuring water inflow, connection G 1/4, for hose 6 × 8 (inner dia. 6 mm, outer dia. 8 mm)

5.1 Sensors with an output signal of 4 to 20 mA (types 202634/45, /47, /50, and /52)

5.1.1 General requirements

- Cable diameter of approx. 4 mm
- Conductor cross section of 2 x 0.25 mm^2
- Lay the signal lines isolated from cables with a voltage of > 60 V
- Use protected cables with twisted cores
- Keep away from large, electrical plants

5.1.2 Terminal assignment

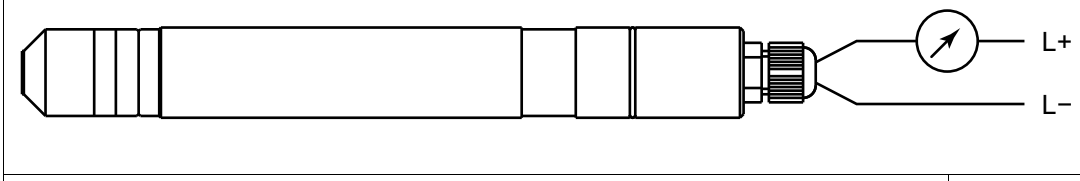

Function		Screw terminals
Voltage supply DC 12 to 30 V	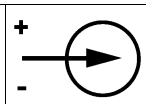	1 L+ 2 L-
Two-wire output of 4 to 20 mA, load-independent current of 4 to 20 mA in voltage supply	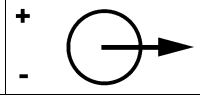	1 L+ 2 L-

5.1.3 Connection

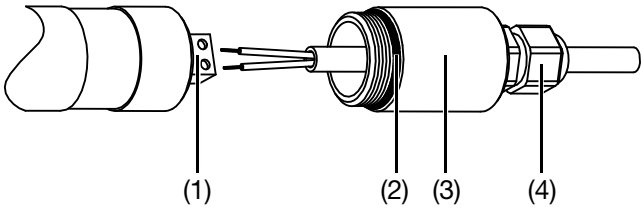

1. Push the cover (3) over the connecting cable.
2. Connect the wires on the terminals (1) in accordance with the terminal assignment.
3. Screw in the cover (3) by hand until the O-ring (2) is sealed.
4. Tighten the Pg screw connection (4).

NOTICE!

Potential damage to the sensor

If the steps are not carried out in the correct order before disconnecting the wires, the connection area of the sensors may be damaged.

▶ Loosen the Pg screw connection before unscrewing the cover.

5 Electrical connection

NOTE!

Screws protected by locking varnish must not be adjusted.

Any damage to the locking varnish will result in the loss of the manufacturer's guarantee.

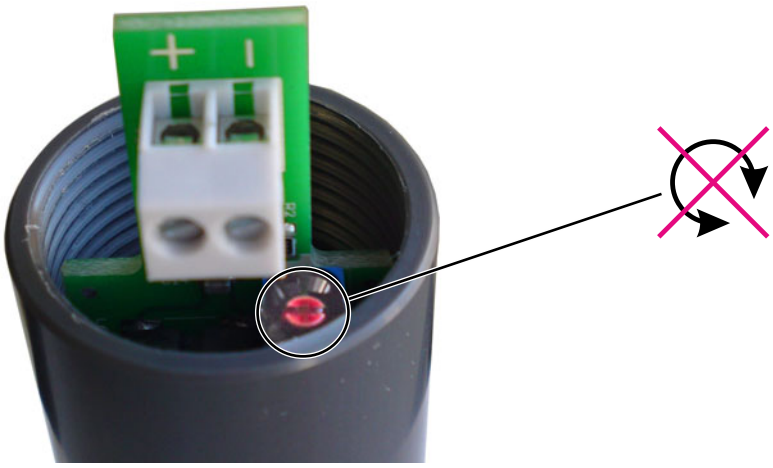

5.2 Sensors with digital interface output signal (types 202634/60, /62, /65, and /67)

5.2.1 General requirements

- Use connecting cable PN 00638333 (1.5 m) or PN 00638337 (5 m) or PN 00638341 (10 m) for connecting to JUMO AQUIS 500 RS or JUMO AQUIS touch S/P

5.2.2 Terminal assignment

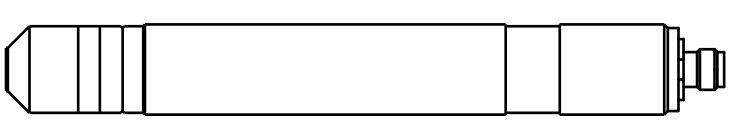

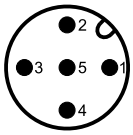

Function	Pin on M12 flange connector
not connected	1
+24 V voltage supply from transmitter/controller	2
GND	3
RS 485 B (RxD/TxD-)	4
RS 485 A (RxD/TxD+)	5

5.3 Flow monitoring (combination fitting and flow monitor)

5.3.1 Terminal assignment

Switching contact = NPN N/O contact (illustration = minimum inflow not reached)

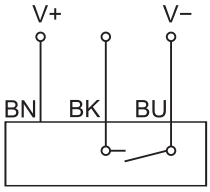

Function	Wire color
+12 V voltage supply from transmitter/controller (V+)	brown (bn)
Contact (NPN N/O contact)	black (bk)
GND (V-)	blue (bu)

5.4 Combination fitting temperature probe

5.4.1 Terminal assignment

Connection for M12 machine connector

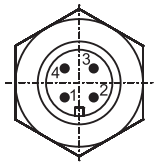

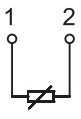

5 Electrical connection

5.5 Example of a measuring section with the sensor type 202634/45

5.5.1 General information

The electronics integrated into the sensor shaft provide an uncalibrated signal of 4 to 20 mA. The signal can be processed by the JUMO AQUIS 500 AS, the JUMO dTRANS AS 02 or the JUMO AQUIS touch S/P. The devices provide the required voltage supply and allow for easy calibration of the measuring system. However, the sensor can also be connected to other indicators, controllers, recorders or PLC systems[1] as long as they supply the sensor with voltage and are able to be calibrated.

5.5.2 Connection example

NOTE!

Before connecting the sensor, you must read the operating manual for the JUMO AQUIS 500 AS.

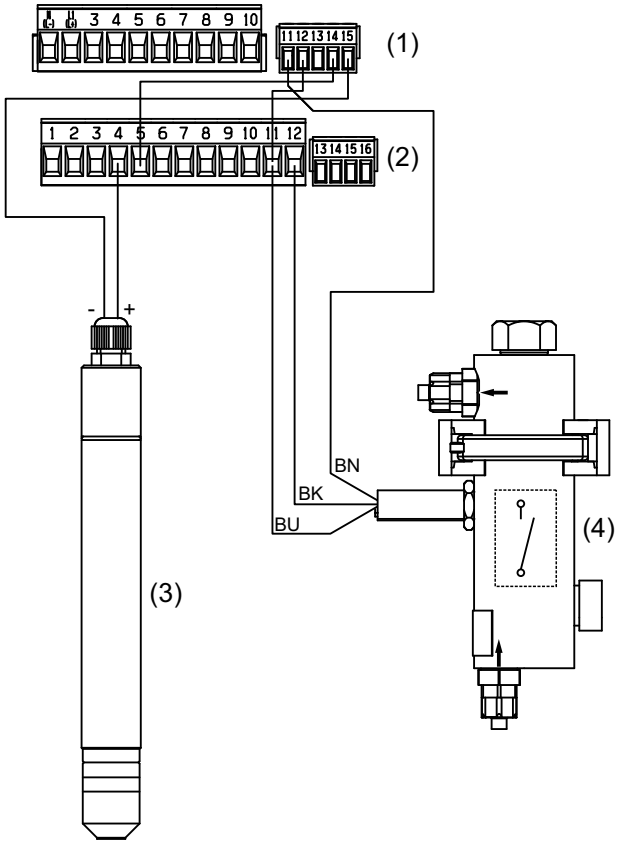

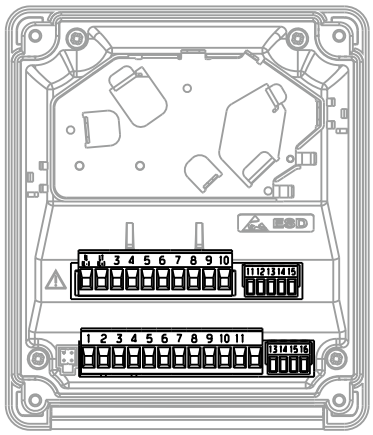

(5)

(1) Terminal block 1
(2) Terminal block 2
(3) Sensor for chlorine dioxide, type 202634/45
(4) Flow monitor, type 202811/20
(5) JUMO AQUIS 500 AS, type 202568/... with open front cover

Flow monitoring

If the flow monitor (4) signals that the sensor (3) inflow is too low, the input to the JUMO AQUIS 500 AS (5) is switched to binary - the device transitions to "Hold" status and an alarm is output.

[1] Galvanic isolation required.

6.1 Important notes for screwing the membrane cap on and off

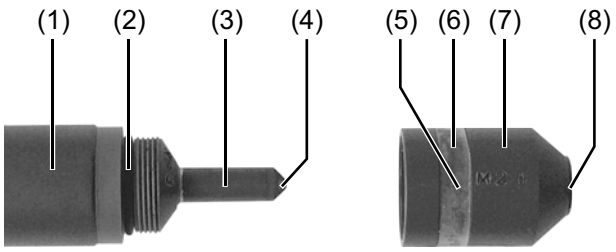

(1) Sensor shaft
(2) O-ring
(3) Electrode finger
(4) Electrode tip
(5) Valve opening
(6) Valve cover
(7) Membrane cap
(8) Membrane

Example: type 202634/45

NOTICE!

Touching the electrode finger may damage it

Touching and contaminating the electrode finger (3, 4) can damage it, making the sensor unusable.

▶ Do not touch the electrode finger when carrying out any of the following steps. Carry out the steps exactly as they are described.

NOTICE!

Damage to the membrane due to overpressure or underpressure

The membrane is extremely sensitive. Screwing the membrane cap (7) on and off can create overpressure or underpressure in the cap which can damage the membrane.

▶ Closely follow the instructions for unscrewing and screwing the membrane cap (chapter 9 "Maintenance", Page 37).

NOTICE!

Damage to the membrane due to mechanical influences

When the sensor is ready to take a measurement (membrane cap fully screwed on), the distance between the electrode finger (3, 4) and the membrane (8) is extremely small. Pushing the tip against the sensor can damage the membrane.

▶ The membrane cap must only be screwed onto the sensor immediately before inserting it into a fitting.

NOTE!

In order for the sensor to function correctly, the membrane must be **fully** screwed onto the sensor. The first screw-in resistance is the sealing O-ring (2). The membrane cap must be screwed on further until it comes into contact with the sensor shaft (1).

6 Startup

6.2 Initial filling and installation of the membrane cap

6.2.1 Types with hydrophobic membranes (202634/45, /50, /60, /65)

NOTE!

The service life of the reference electrolyte is around 3 to 6 months.

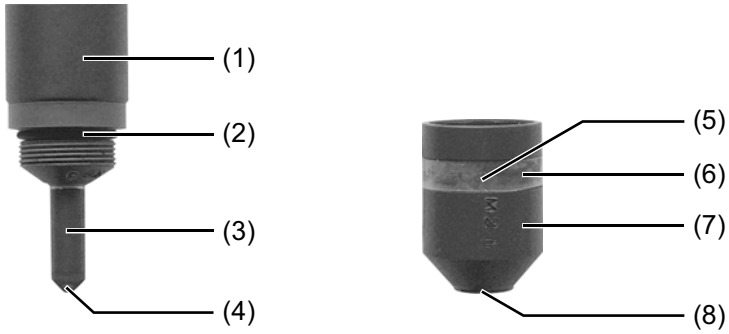

(1) Sensor shaft
(2) O-ring
(3) Electrode finger
(4) Electrode tip
(5) Valve opening
(6) Valve cover
(7) Membrane cap
(8) Membrane

NOTICE!

Damage to the membrane due to overpressure or underpressure

The membrane (8) is extremely sensitive. Screwing the membrane cap (7) on and off can create overpressure or underpressure in the cap which can damage the membrane.

▶ Follow the instructions for filling the reference electrolyte closely.

1.	Unscrew the membrane cap, which is only loosely screwed on in the delivered condition, from the sensor shaft (1) and place it on a clean surface	
2.	Fill the membrane cap (7) up to the brim with **bubble-free** electrolyte (contained in the scope of delivery of the sensor).	
3.	Holding the sensor shaft vertically, slowly insert it into the filled membrane cap and fit it onto the membrane cap. Then slowly screw the sensor shaft into the membrane cap in a clockwise direction. Any surplus electrolyte will leak out of a valve. **When holding the membrane cap, do not hold it by the valve (above the laser engraving, see arrow in the figure on the right).**	
4.	Rinse off any electrolyte on the exterior with water.	

NOTE!

In order for the sensor to function correctly, the membrane cap must be **fully** screwed onto the sensor. The first screw-in resistance is the sealing O-ring (2). The membrane cap must be screwed on further until it comes into contact with the sensor shaft (1).

NOTICE!

Damage to the membrane due to mechanical influences

When the sensor is ready to take a measurement (membrane cap fully screwed on), the distance between the electrode finger (3, 4) and the membrane (8) is extremely small. Pushing the tip against the sensor can damage the membrane.

▶ Only commission the sensor immediately before inserting it into a fitting.

6.2.2 Types with membranes that are insensitive to chemicals (202634/47, /52, /62, /67)

NOTE!

The service life of the reference electrolyte is around 3 to 6 months.

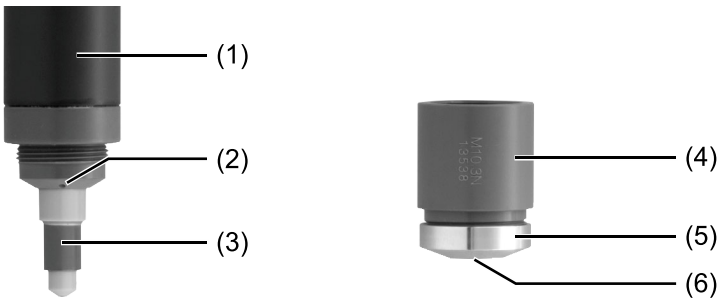

(1) Sensor shaft
(2) Pressure equalization opening
(3) Electrode finger
(4) Membrane cap
(5) Membrane holder
(6) Membrane

1.	Remove the protective cap from the membrane cap.	
2.	Unscrew the membrane cap from the sensor body.	
3.	Place the membrane cap on a clean, level base. Fill the membrane cap up to the brim with electrolyte (contained in the scope of delivery).	

4.	Holding the sensor shaft with the electrode finger vertically, slowly insert it into the filled membrane cap and fit it onto the membrane cap. Turn the sensor body counter-clockwise until the thread has engaged. Slowly screw the sensor shaft into the membrane cap in a clockwise direction completely up to the limit stop.	
5.	Ensure that the membrane cap is screwed tightly against the sensor shaft (no gap between the membrane cap and sensor shaft, see figure on the right). Rinse off any electrolyte on the exterior with water.	

NOTE!

In order for the sensor to function correctly, the membrane cap must be **fully** screwed onto the sensor.

NOTICE!

Damage to the membrane due to mechanical influences

When the sensor is ready to take a measurement (membrane cap fully screwed on), the distance between the electrode finger and the membrane is extremely small. Pushing the tip against the sensor can damage the membrane.

▶ Only commission the sensor immediately before inserting it into a fitting.

6 Startup

6.3 Minimum inflow

NOTE!

The flow rate from the measurement medium must be at least **15 cm/s** in order for the sensor to work correctly. The minimum flow rate in the combination fitting or the flow fitting is **30 l/h**. Values measured by the sensors below the minimum inflow speed are too low. This can cause dangerous overdosage in a connected regulating system. If values are measured above the minimum inflow speed, the measurement signal is only marginally influenced by the inflow speed.

6.3.1 Adjusting the minimum inflow (combination fitting and flow monitor)

The flow in the fitting is regulated by turning the valve insert (4).

The minimum inflow is reached when the flow of the measurement medium lifts the floating body (3) enough for the top edge to reach the marking (1).

If the combination fitting is equipped with a flow monitor, the contact of the inductive proximity sensor (2) closes and sends a signal to the connected evaluation unit/controller indicating that the minimum inflow has been reached; please refer to "Flow monitoring (combination fitting and flow monitor) ", Page 27.

The principle is illustrated by the graphic using the combination fitting as an example, but the same principle applies for separate flow monitors (when the sensor is used in the flow fitting).

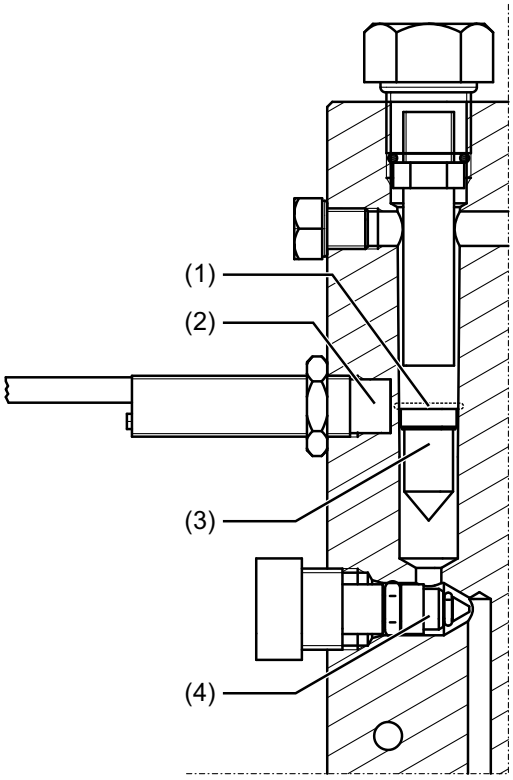

6.4 Settling time

NOTE!

The sensors will only measure a constant value at the end of the settling time and can then be calibrated.

Settling time	
All types 202634	1 hour

On the day after the initial startup, the calibration procedure should be repeated.

7.1 General information

NOTE!

According to requirements, the sensor should be inspected or calibrated at regular fixed intervals.

Recommendation: weekly, or more frequently depending on the accuracy requirements.

7.2 Calibrating with an indicator/controller

Reference method

NOTE!

Suitable reference methods for calibration can be found in standard DIN EN ISO 7393-2, for example.

Photometric determination with the **DPD** method is frequently used for calibration (DPD = N,N-**d**iethyl-1,4-**p**henylene**d**iamine). Corresponding test systems are available commercially. Some examples of providers include VWR International (formerly Merck), (Spectroquant®), Macherey-Nagel (Nanocolor®), etc.

Initial situation

- Display format and measuring range are set, refer to the operating manual for the indicator/controller used.
- The sensor is installed in a suitable flow fitting (refer to chapter 4.3 "Flow fitting for membrane-covered sensors (type 202811/30)", Page 22) or combination fitting (refer to chapter 4.2 "Combination fitting (type 202811/10)", Page 19).
- The settling time for the sensor (**1 hour**) has elapsed and the measured value is stable.

Procedure

1. Take a water sample from the outlet of the fitting (or from the immediate vicinity).
2. Immediately determine the analyte concentration (chlorine dioxide or ozone) of the sample using a suitable reference method.
3. Calibrate the indicating device on the basis of the reference value; refer to the operating manual for the transmitter/controller used.

Checking the determined slope

Many transmitters/controllers (e.g. the JUMO AQUIS 500 AS) have a "calibration logbook". This logbook is used to record the relevant data during every calibration.

NOTE!

If the value for the nominal slope is **under 30%**, the membrane cap and the electrolyte must be replaced and the electrode tip must be cleaned; see chapter 9 "Maintenance", Page 37.

Setting the slope manually

Refer to the operating manual for the transmitter/controller used.

Zero point adjustment

A zero point adjustment is **not** required for the sensors described in this operating manual. If there is no analyte in the measurement medium, the value displayed will be a zero. The zero point is **not dependent** on changes in the flow rate, conductivity, temperature, or the pH value.

8 Removal

NOTE!

Removing the sensor may cause an incorrect measured value at the input of the transmitter/controller and cause uncontrolled dosing in a control loop.

Before removing the sensor:

1. Switch off the transmitter/controller or switch to manual mode.
2. Block measuring water **inlet**.
3. Block measuring water **outlet**.
4. Remove electrical connection.
   a) Unfasten cable fitting.
      The cable can be moved.
   b) Unscrew the cover with the cable fitting from the sensor.
   c) Release the conductors in the terminals.
5. Undo the union nut on the fitting and carefully pull out the sensor.

9.1 Replacing the electrolyte

9.1.1 Types with hydrophobic membranes (202634/45, /50, /60, /65)

The electrolyte should be replaced every three to six months and after calibration performed due to instable measuring values or a value that is too low.

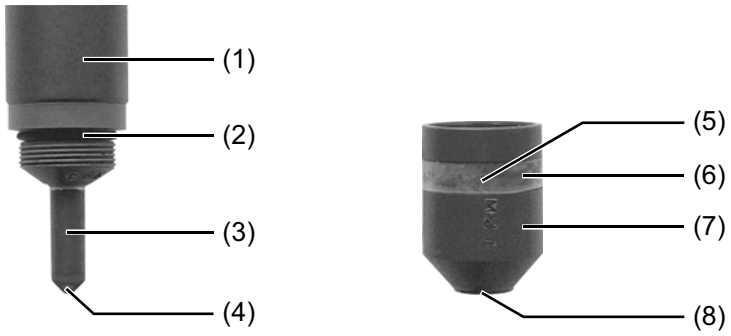

(1) Sensor shaft
(2) O-ring
(3) Electrode finger
(4) Electrode tip
(5) Valve opening
(6) Valve cover
(7) Membrane cap
(8) Membrane

NOTICE!

Damage to the membrane due to overpressure or underpressure

The membrane (8) is extremely sensitive. Screwing the membrane cap (7) on and off can create overpressure or underpressure in the cap which can damage the membrane.

▶ Follow the instructions for filling the reference electrolyte closely.

NOTICE!

Touching the electrode finger may damage it

Touching and contaminating the electrode finger (2) can damage it, making the sensor unusable.

▶ Do not touch the electrode finger when carrying out any of the following steps. Carry out the steps exactly as they are described.

1.	Lift the transparent cover (6) of the valve opening (5) above the engraving near the valve opening with a small screwdriver or similar and push it down.	
2.	Unscrew the membrane cap (7) from the sensor shaft (1), discard the used up electrolyte.	
3.	Slide the transparent cover back again until it is back in the groove and the valve opening closes.	

4.	Place the membrane cap (7) on a clean surface and fill up to the brim with **bubble-free** electrolyte (contained in the scope of delivery of the sensor) and place it back on the support surface.	
5.	Holding the sensor shaft vertically, slowly insert it into the filled membrane cap and fit it onto the membrane cap. Then slowly screw the sensor shaft into the membrane cap in a clockwise direction. Any surplus electrolyte will leak out of a valve. **When holding the membrane cap, do not hold it by the valve (above the laser engraving, see arrow in the figure on the right).**	
6.	Rinse off any electrolyte on the exterior with water.	

NOTE!

In order for the sensor to function correctly, the membrane must be **fully** screwed onto the sensor. The first screw-in resistance is the sealing O-ring (2). The membrane cap must be screwed on further until it comes into contact with the sensor shaft (1).

NOTICE!

Damage to the membrane due to mechanical influences

When the sensor is ready to take a measurement (membrane cap fully screwed on), the distance between the electrode finger (3, 4) and the membrane (8) is extremely small. Pushing the tip against the sensor can damage the membrane.

▶ Only commission the sensor immediately before inserting it into a fitting.

9.1.2 Types with membranes that are insensitive to chemicals (202634/47, /52, /62, /67)

The electrolyte should be replaced every three to six months and after calibration performed due to instable measuring values or a value that is too low.

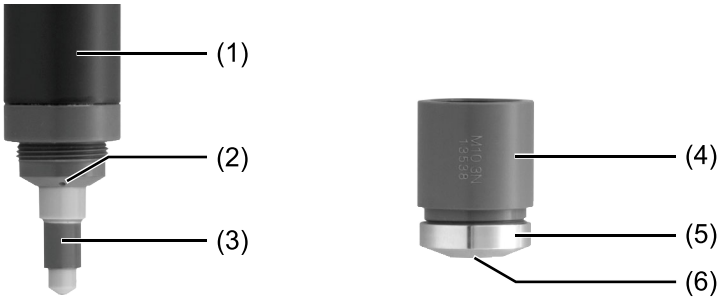

(1) Sensor shaft
(2) Pressure equalization opening
(3) Electrode finger
(4) Membrane cap
(5) Membrane holder
(6) Membrane

NOTICE!

Touching the electrode finger may damage it

Touching and contaminating the electrode finger can damage it, making the sensor unusable.

▶ Do not touch the electrode finger when carrying out any of the following steps. Carry out the steps exactly as they are described.

1.	Unscrew the membrane cap from the sensor body.	
2.	Empty used up electrolyte from the membrane cap.	
3.	Rinse the membrane cap with tap water.	
4.	Rinse the electrode finger with clean water and dry it with a clean paper cloth.	
5.	Shake the sensor body dry several times. *The pressure equalization opening (arrow in figure on the right) is emptied.*	

6.	Use the special abrasive paper included in the scope of delivery to clean **just the tip** of the dry electrode finger (=measuring electrode). To do so, place the special abrasive paper on a level surface with the rough side facing upward and hold in place at the ends . While holding the sensor vertically, run the tip of the electrode over the abrasive paper at least two times. Use a new area of the abrasive paper each time.	
7.	Place the membrane cap on a clean, level base. Fill the membrane cap up to the brim with electrolyte (contained in the scope of delivery).	
8.	Holding the sensor shaft with the electrode finger vertically, slowly insert it into the filled membrane cap and fit it onto the membrane cap. Turn the sensor body counter-clockwise until the thread has engaged. Slowly screw the sensor shaft into the membrane cap in a clockwise direction completely up to the limit stop.	
9.	Ensure that the membrane cap is screwed tightly against the sensor shaft (no gap between the membrane cap and sensor shaft, see figure on the right). Rinse off any electrolyte on the exterior with water.	

NOTICE!

Damage to the membrane due to mechanical influences

When the sensor is ready to take a measurement (membrane cap fully screwed on), the distance between the electrode finger and the membrane is extremely small. Pushing the tip against the sensor can damage the membrane.

▶ Insert the sensor back into the fitting immediately after replacing the electrolyte.

NOTE!

If the sensor still provides measured values that are too low or instable after the electrolyte replacement, a new membrane cap must be used.

9.2 Replacing the membrane cap

9.2.1 Types with hydrophobic membranes (202634/45, /50, /60, /65)

The membrane cap should be replaced regularly once per year and after each calibration performed due to instable measuring values or a value that is too low.

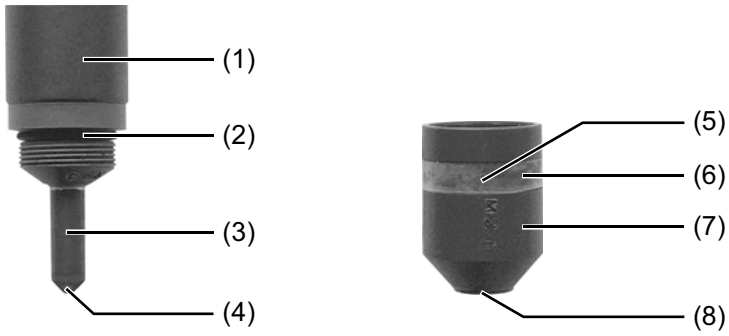

(1) Sensor shaft
(2) O-ring
(3) Electrode finger
(4) Electrode tip
(5) Valve opening
(6) Valve cover
(7) Membrane cap
(8) Membrane

NOTICE!

Damage to the membrane due to overpressure or underpressure

The membrane (8) is extremely sensitive. Screwing the membrane cap (7) on and off can create overpressure or underpressure in the cap which can damage the membrane.

▶ Follow the instructions for filling the reference electrolyte closely.

NOTICE!

Touching the electrode finger may damage it

Touching and contaminating the electrode finger (2) can damage it, making the sensor unusable.

▶ Do not touch the electrode finger when carrying out any of the following steps. Carry out the steps exactly as they are described.

1.	The valve opening is above the laser engraving on the membrane cap. Lift the transparent cover (6) of the valve opening (5) (above the engraving) near the valve opening with a small screwdriver or similar and push it down.	
2.	Unscrew the membrane cap (7) from the sensor shaft (1), discard the used up electrolyte.	
3.	Rinse the electrode finger (3) with clean water and dry it with a clean paper cloth.	
4.	Use the special abrasive paper included in the scope of delivery to clean **just the tip** of the dry electrode finger (=measuring electrode). Hold the soft base with the special abrasive paper (rough side upward) in place and, while holding the sensor at a slight angle, run the tip of the electrode over the abrasive paper. Then rotate the sensor slightly in its axis and run it over the abrasive paper again. Repeat this procedure multiple times.	

5.	Place the new membrane cap on a clean surface and fill up to the brim with **bubble-free** electrolyte (contained in the scope of delivery of the sensor).	
6.	Holding the sensor shaft vertically, slowly insert it into the filled membrane cap and fit it onto the membrane cap. Then slowly screw the sensor shaft into the membrane cap in a clockwise direction. Any surplus electrolyte will leak out of a valve. **When holding the membrane cap, do not hold it by the valve (above the laser engraving, see arrow in the figure on the right).**	
7.	Rinse off any electrolyte on the exterior with water.	

NOTE!

In order for the sensor to function correctly, the membrane cap must be **fully** screwed onto the sensor. The first screw-in resistance is the sealing O-ring (2). The membrane cap must be screwed on further until it comes into contact with the sensor shaft (1).

NOTICE!

Damage to the membrane due to mechanical influences

When the sensor is ready to take a measurement (membrane cap fully screwed on), the distance between the electrode finger (3, 4) and the membrane (8) is extremely small. Pushing the tip against the sensor can damage the membrane.

▶ Only commission the sensor immediately before inserting it into a fitting.

9.2.2 Types with membranes that are insensitive to chemicals (202634/47, /52, /62, /67)

The membrane cap should be renewed under the following conditions:

- regularly after one year of operation
- if the measured values are still too low or instable after a prior calibration

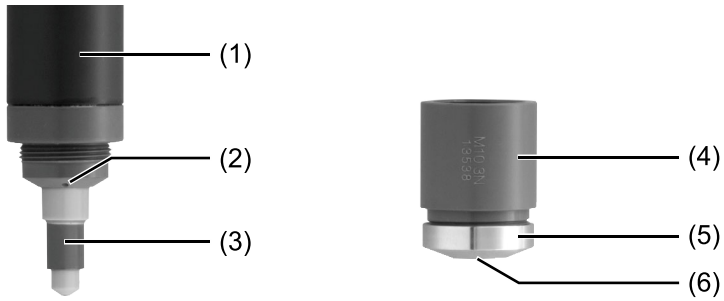

(1) Sensor shaft
(2) Pressure equalization opening
(3) Electrode finger
(4) Membrane cap
(5) Membrane holder
(6) Membrane

NOTICE!

Touching the electrode finger may damage it

Touching and contaminating the electrode finger can damage it, making the sensor unusable.

▶ Do not touch the electrode finger when carrying out any of the following steps. Carry out the steps exactly as they are described.

1.	Unscrew the membrane cap from the sensor body.	
2.	Empty electrolyte from the membrane cap.	
3.	Rinse the membrane cap with tap water.	
4.	Rinse the electrode finger with clean water and dry it with a clean paper cloth.	
5.	Shake the sensor body dry several times. *The pressure equalization opening (arrow in figure on the right) is emptied.*	

6.	Use the special abrasive paper included in the scope of delivery to clean **just the tip** of the dry electrode finger (=measuring electrode). To do so, place the special abrasive paper on a level surface with the rough side facing upward and hold in place at the ends . While holding the sensor vertically, run the tip of the electrode over the abrasive paper at least two times. Use a new area of the abrasive paper each time.	
7.	Unpack the new membrane cap and place on a clean, level base. Fill the membrane cap up to the brim with electrolyte (contained in the scope of delivery).	
8.	Holding the sensor shaft with the electrode finger vertically, slowly insert it into the filled membrane cap and fit it onto the membrane cap. Turn the sensor body counter-clockwise until the thread has engaged. Slowly screw the sensor shaft into the membrane cap in a clockwise direction completely up to the limit stop.	
9.	Ensure that the membrane cap is screwed tightly against the sensor shaft (no gap between the membrane cap and sensor shaft, see figure on the right). Rinse off any electrolyte on the exterior with water.	

NOTICE!

Damage to the membrane due to mechanical influences

When the sensor is ready to take a measurement (membrane cap fully screwed on), the distance between the electrode finger and the membrane is extremely small. Pushing the tip against the sensor can damage the membrane.

▶ Insert the sensor back into the fitting immediately after replacing the membrane cap.

9.3 Removing calcium deposits from the membrane cap

NOTICE!

Damage to the membrane due to overpressure or underpressure

The membrane is extremely sensitive. Screwing the membrane cap on and off can create overpressure or underpressure in the cap which can damage the membrane.

▶ Closely follow the instructions for unscrewing and screwing the membrane cap (chapter 9 "Maintenance", Page 37).

1. Open valve cover(s) of the membrane cap.
2. Unscrew the membrane cap from the sensor shaft.
3. Discard the electrolyte.
4. Place the membrane cap in 1% hydrochloric acid for a few hours.
5. Rinse thoroughly with distilled water or drinking water before startup.
6. Screw the membrane cap filled with electrolyte onto the sensor shaft.
   Make sure that the valve opening is not held closed.

9.4 Storage

NOTE!

Membrane caps which have been in operation for longer than a day cannot be stored and used again.

NOTICE!

Damage to the membrane due to overpressure or underpressure

The membrane is extremely sensitive. Screwing the membrane cap on and off can create overpressure or underpressure in the cap which can damage the membrane.

▶ Closely follow the instructions for unscrewing and screwing the membrane cap (chapter 9 "Maintenance", Page 37).

Preparation for storage

1. Open valve cover(s) of the membrane cap.
2. Unscrew the membrane cap from the sensor shaft.
3. Discard the electrolyte.
4. Rinse the membrane cap and electrode finger with tap water and dry them, ensuring they are free from dust.
5. Loosely screw the dry membrane cap onto the sensor shaft. The membrane must not be positioned at the tip of the electrode finger.

The sensor is ready to be stored.

Restarting after storage

1. Unscrew the membrane cap, which has only loosely been screwed on for storage, from the sensor shaft.
2. Use the special abrasive paper provided to clean the tip of the electrode finger.
3. Fill the new membrane cap with electrolyte and screw it onto the sensor shaft.
   Make sure that the valve opening is not held shut.

The sensor is ready for operation.

9 Maintenance

9.5 Consumable material

Spare part sets and electrolytes

Designation	Part no.
Spare part set for 202634/45, /50, /60 and /65 (1 x membrane cap, fine abrasive paper)	00392331
Spare part set for 202634/47 and /67 (1 x membrane cap, fine abrasive paper)	00753804
Spare part set for 202634/52 and /62 (1 x membrane cap, fine abrasive paper)	00762731
Special electrolyte for 202634/45, /47, /65, and /67 (100 ml)	00392332
Special electrolyte for 202634/50, /52, /60, and /62 (100 ml)	00392333

10.1 General troubleshooting

Error/fault	Possible cause	Remedy	Preventative measures
Output signal of the sensor is too low or too high	Incorrect calibration	Repeat calibration according to the DPD method; refer to chapter 7.2 "Calibrating with an indicator/controller", Page 35	Calibrate the sensor more frequently, if required
Output signal of the sensor is too low Sensor cannot be calibrated to the DPD value	Settling time too short	Wait for at least one hour	
	Deposit on the electrode finger tip (measuring electrode)	Clean the electrode finger tip	Shorten the maintenance intervals, if required
	Inflow to the measuring cell is too low	Increase the inflow	Monitor the minimum inflow
Output signal of the sensor is too low Sensor cannot be calibrated to the DPD value Output signal of the sensor decreases or stays the same when the DPD value is increased Fluctuating signal	Membrane destroyed: electrolyte leaking out - measurement medium leaking in	Replace the membrane cap	Avoid damaging the membrane. Do not push the sensor open when the membrane cap is screwed on. Prevent coarse particles or fragments of glass from flowing in
	Deposits on the Membrane cap	Replace the membrane cap	
	Gas bubbles on the outside of the membrane	Briefly increase the flow	Check the installation and change if necessary
	No electrolyte in the membrane cap	Fill the membrane cap with electrolyte; refer to chapter 9.1 "Replacing the electrolyte", Page 37	
Output signal of the sensor is too high. Sensor cannot be calibrated to the DPD value	Besides the analytes, the measurement medium also contains other oxidizing agents, such as Cl_2	Avoid adding these substances. Change the water	Ensure cleaning agents and disinfectants are removed fully after use
The DPD and sensor values match; the redox measurement trend is correct, but the setpoint value is not reached	Incorrect control parameters	Optimize the control parameters	
	The amount of disinfectant dosed per unit of time is too high. The concentration is exceeded before the measurement medium reaches the sensor	Reduce the amount admixed per unit of time. Reduce the concentration of disinfectant in the solution added	
	Flow through the system is too low	Improve through-mixing	Implement structural measures for better through-mixing
Sensor and DPD values do not match; the sensor values fluctuate: too high/too low	Incorrect control parameters	Optimize the control parameters	
	Flow through the system is too low	Improve through-mixing	Implement structural measures for better through-mixing

10 Overcoming errors and malfunctions

Error/fault	Possible cause	Remedy	Preventative measures
Sensor displays unusually sluggish response behavior	The membrane is partially blocked by pollutants such as calcium or oil. Disinfectant is prevented from reaching the sensor	Replace the membrane cap	Take measures to improve the quality of the water
Only for types 202634/45, /47, /50, /52 (output signal of 4 to 20 mA):			
Output signal of the sensor is "0"	The sensor has been connected to the transmitter/controller with reverse polarity	Connect the sensor correctly; refer to chapter 5 "Electrical connection", Page 25	
	The measuring cable is broken	Replace the measuring cable	
	The sensor is faulty	Send the sensor to the manufacturer for inspection/reconditioning	
	The transmitter/controller is faulty	Send the transmitter/controller to the manufacturer for inspection/reconditioning	
Only for types 202634/60, /62, /65, /67 (digital interface output signal)			
Green LED			
Lights flickering or not lighting up	The voltage is too low, therefore preventing the processor from working correctly	Set up the voltage supply according to the specifications in the section "Technical Data"	
	The sensor is faulty	Send the sensor to the manufacturer for inspection/reconditioning	
Orange LED			
Continuously lit	The sensor signal has a negative analyte value	Carry out maintenance on the sensor; refer to chapter 9 "Maintenance", Page 37, or send the sensor to the manufacturer for inspection/reconditioning	
Regular flashing	The electrochemical cell is overloaded ***Concentration of chlorine dioxide or ozone too high***	Check the system and rectify the errors. If necessary, calibrate the sensor or carry out maintenance	

10.2 Specific troubleshooting on the sensor

If the electrode finger has a bright silvery or white appearance, the sensor must be reconditioned by the manufacturer. Brown-gray colors are normal.

10.2.1 Testing the leak-tightness of the membrane cap

1. Carefully dry the outside of the membrane cap to be checked.
2. Prepare the membrane cap for mounting as described in chapter 6.2 "Initial filling and installation of the membrane cap", Page 30 and fill it with electrolyte or clean water.
3. If necessary, dry the outside of the membrane cap again.
4. Slowly and carefully screw the membrane cap onto the sensor shaft as described in chapter 6.2 "Initial filling and installation of the membrane cap", Page 30.
5. When screwing the membrane cap on, check if any liquid leaks through the membrane.

NOTE!

You must check carefully to determine that liquid does not leak through the membrane but that it escapes at the outlets designed for this purpose; repeat the leakage test if necessary.

– If liquid leaks through the membrane, the membrane is faulty and you must use a new membrane cap.
– If the membrane cap is leaking, you must check if the reference electrode was damaged when the measuring water and electrolyte were replaced. If the electrode finger has a bright silvery or white appearance, the measuring cell must be sent to the manufacturer for inspection.

10.2.2 Electronics test

Types with an output signal of 4 to 20 mA (types 202634/45, /47, /50, and /52)

1. Unscrew the membrane cap, as described in chapter 9 "Maintenance", Page 37.
2. Carefully rinse the electrode finger and dry it carefully with a clean cloth.
3. Connect the sensor to the indicator/controller and wait for approx. 5 minutes.
4. Read the original signal from the measuring cells on the measuring device/controller or measure it with a digital multimeter.

   The measured value should be approx. 4 mA.

– If the sensor signal corresponds to roughly this value, the electronics are likely to be working correctly.
– If the measured value is significantly different from the value stated above, the sensor must be sent to the manufacturer for inspection.

10.2.3 Testing the zero point

NOTE!

The zero point should be tested after the electronics have been tested.

1. Prepare the sensor for startup; refer to chapter 6 "Startup", Page 29.
2. Connect the sensor to the indicator/controller.
3. Carefully place the sensor in a beaker with clean tap water (without disinfectant).
4. Move the sensor around in the beaker for approx. 30 s (without creating air bubbles).
5. Leave the sensor in the beaker for >1 h and wait for the settling time to elapse.

6. Read the original signal on the measuring device/controller or measure it with a digital multimeter.
7. The sensor signal should be around the zero point.

– If the sensor signal tends towards zero, the zero point is very likely to be okay.
– If the measured value deviates significantly from zero, maintenance must be carried out on the sensor (refer to chapter 9 "Maintenance", Page 37) and the "zero point test" must be repeated. Note that a recently cleaned working electrode (measuring electrode) has a relatively high zero point. In this case, the sensor will take a few days to reach its lowest zero point.
– If the measured value does not tend towards zero, even after maintenance has been carried out, the sensor must be sent to the manufacturer for inspection.

NOTE!

In general, the zero points of sensors with an extremely small measuring range, or which are more sensitive, are slightly higher than for sensors with large measuring ranges or which are less sensitive.

10.2.4 Measurement signal test

NOTE!

The signal should be tested after the zero point has been tested.

1. Add a little disinfectant to the water in the beaker (which was used in the section "Testing the zero point"; refer to chapter 10.2.3 "Testing the zero point", Page 49).
2. With the sensor connected to the measuring device, move it around as evenly as possible in the beaker for at least five minutes.
3. Check to see if the measuring signal increases in this time.

– If the sensor signal increases, the sensor is likely to be working correctly. If the sensor does not react to the disinfectant, carry out maintenance on the sensor (refer to chapter 9 "Maintenance", Page 37) before repeating the "signal test".
– If the sensor still does not react to the disinfectant after these steps have been carried out, it must be sent to the manufacturer for inspection.

10.2.5 Testing the environment

If the cause of the error cannot be clearly identified after carrying out the tests mentioned above, the following points in the area around the measuring chain must be tested:

- Flow
- Indicating device / controller
- Dosing device
- Correct calibration
- Pressure in the flow fitting
- Concentration of the disinfectant in the measured water (analysis)
- Measuring cable
- pH value of the measured water
- Temperature of the measured water
- Analysis
- Suitability of the sensor for measuring the dosed disinfectant
- Concentration of the disinfectant in the dosing tank

11.1 Sensors for chlorine dioxide (ClO_2)

11.1.1 Version with output signal 4 to 20 mA (type 202634/45)

Area of application	Swimming pool water, drinking water, service water and process water **This must not contain any surfactants**
Measuring principle	Membrane-covered, amperometric, two-electrode system with integrated electronic components
Membrane type	Hydrophobic PTFE membrane
Measuring cable connection	2-pole terminal connection (2 × 1 mm^2)
Voltage supply	U_B DC 12 to 30 V (galvanic isolation required)
Electromagnetic compatibility	According to EN 61326-1
Interference emission	Class B
Interference immunity	Industrial requirements
Output signal	4 to 20 mA
Burden/current consumption	≤ (U_B - 11 V) ÷ 0.02 A
Settling time	Approx 1 h for initial startup
Inflow speed	Approx. 15 cm/s (corresponds to a totalized flow rate of approx. 30 l/h when installed in the JUMO flow fitting (part no.: 00392611))
Measuring ranges	0.05 to 0.5 mg/l (ppm) 0.05 to 2 mg/l (ppm) 0,05 bis 5 mg/l (ppm) 0.05 to 10 mg/l (ppm)
Dissolution	
Measuring range 0.5 mg/l	0.001 mg/l
Measuring ranges 2, 5, 10 mg/l	0.01 mg/l
Slope drift	Approx. < -1 % per month under replicable conditions (25 °C, pH 7.2 in drinking water)
Response time $_{t90}$	Approx. 15 seconds
Operating temperature	Prerequisite: no ice crystals in the measurement medium
Measuring water	0 to 45 °C
Environment	0 to 55 °C
Temperature compensation	Automatic, using integrated temperature probe, avoid temperature jumps
pH value of area of application	pH 1 to pH 12
Zero point adjustment	Not required
Slope adjustment	On evaluation unit/controller using analytical determination
Disturbances	
Chlorine (Cl_2)	Factor 0.35
Ozone (O_3)	Factor 3
Pressure resistance	No pressure fluctuations admissible; pressure-free operation (atmospheric pressure) recommended
Absolute pressure	Max. 2 bar
Relative pressure	Max. 1 bar
Materials	Semi-permeable membrane, PVC-U
Dimensions	Dia. 25 mm, length 220 mm
Weight	Approx. 125 g

11 Technical data

11.1.2 Version with digital interface output signal (type 202634/65)

Area of application	Swimming pool water, drinking water, service water and process water **This must not contain any surfactants**
Measuring principle	Membrane-covered, amperometric, two-electrode system with integrated electronic components
Membrane type	Hydrophobic PTFE membrane
Measuring cable connection	5-pole flange connector, M12
Voltage supply	U_B DC 9 to 30 V (galvanically isolated in the sensor)
Electromagnetic compatibility	According to EN 61326-1
Interference emission	Class B
Interference immunity	Industrial requirements
Output signal	Modbus RTU
Burden/current consumption	56 to 20 mA
Settling time	Approx 1 h for initial startup
Inflow speed	Approx. 15 cm/s (corresponds to a totalized flow rate of approx. 30 l/h when installed in the JUMO flow fitting (part no.: 00392611))
Measuring ranges	0.05 to 2 mg/l (ppm) 0.05 to 20 mg/l (ppm)
Dissolution	
Measuring range 0.5 mg/l	0.001 mg/l
Measuring range 20 mg/l	0.01 mg/l
Slope drift	Approx. < -1 % per month under replicable conditions (25 °C, pH 7.2 in drinking water)
Response time $_{t90}$	Approx. 15 seconds
Operating temperature	Prerequisite: no ice crystals in the measurement medium
Measuring water	0 to 45 °C
Environment	0 to 55 °C
Temperature compensation	Automatic, using integrated temperature probe, avoid temperature jumps
pH value of area of application	pH 1 to pH 12
Zero point adjustment	Not required
Slope adjustment	On evaluation unit/controller using analytical determination
Disturbances	
Chlorine (Cl_2)	Factor 0.35
Ozone (O_3)	Factor 3
Pressure resistance	No pressure fluctuations admissible; pressure-free operation (atmospheric pressure) recommended
Absolute pressure	Max. 2 bar
Relative pressure	Max. 1 bar
Materials	Semi-permeable membrane, PVC-U
Dimensions	Dia. 25 mm, length 205 mm
Weight	Approx. 125 g

11.2 Sensors for chlorine dioxide (ClO_2) with membranes that are insensitive to chemicals

11.2.1 Version with output signal 4 to 20 mA (type 202634/47)

Area of application	All types of water treatment (e.g. bottle washing machine, CIP plant, rinser), seawater, **surfactants are tolerated**
Measuring principle	Membrane-covered, amperometric, two-electrode system with integrated electronic components
Membrane type	The membrane is impervious to chemicals and surfactants
Measuring cable connection	2-pole terminal connection (2 × 1 mm^2)
Voltage supply	U_B DC 12 to 30 V (galvanic isolation required)
Electromagnetic compatibility	According to EN 61326-1
Interference emission	Class B
Interference immunity	Industrial requirements
Output signal	4 to 20 mA
Burden/current consumption	≤ (U_B - 11 V) ÷ 0.02 A
Settling time	Approx 1 h for initial startup
Inflow speed	Approx. 15 cm/s (corresponds to a totalized flow rate of approx. 30 l/h when installed in the JUMO flow fitting (part no.: 00392611))
Measuring ranges	0.05 to 2 mg/l (ppm) 0.05 to 5 mg/l (ppm) 0.05 to 10 mg/l (ppm)
Dissolution	
Measuring range 2 mg/l	0.001 mg/l
Measuring ranges 5, 10 mg/l	0.01 mg/l
Accuracy	After calibration under replicable conditions (25 °C, pH 7.2 in drinking water)
Measuring range 2 mg/l	< 1 % of the measuring range end value (with 0.4 und 1.6 mg/l)
Slope drift	Approx. < -1 % per month under replicable conditions (25 °C, pH 7.2 in drinking water)
Response time $_{t90}$	Approx. 60 s
Operating temperature	Prerequisite: no ice crystals in the measurement medium
Measuring water	0 to 50 °C
Environment	0 to 55 °C
Temperature compensation	Automatic, using integrated temperature probe, max. temperature change: 5 °C per hour, avoid temperature jumps
pH value of area of application	pH 1 to pH 12
Zero point adjustment	Not required
Slope adjustment	On evaluation unit/controller using analytical determination
Disturbances	
Chlorine (Cl_2)	Factor 0.1
Ozone (O_3)	Factor 25
Pressure resistance	No pressure fluctuations admissible; pressure-free operation (atmospheric pressure) recommended
Absolute pressure	Max. 2 bar
Relative pressure	Max. 1 bar
Materials	Elastomer membrane, PVC-U, stainless steel 1.4571
Dimensions	Dia. 25 mm, length 220 mm
Weight	Approx. 125 g

11 Technical data

11.2.2 Version with digital interface output signal (type 202634/67)

Area of application	All types of water treatment (e.g. bottle washing machine, CIP plant, rinser), seawater, **surfactants are tolerated**
Measuring principle	Membrane-covered, amperometric, two-electrode system with integrated electronic components
Membrane type	The membrane is impervious to chemicals and surfactants
Measuring cable connection	5-pole flange connector, M12
Voltage supply	U_B DC 9 to 30 V (galvanically isolated in the sensor)
Electromagnetic compatibility	According to EN 61326-1
Interference emission	Class B
Interference immunity	Industrial requirements
Output signal	Modbus RTU
Burden/current consumption	56 to 20 mA
Settling time	Approx 1 h for initial startup
Inflow speed	Approx. 15 cm/s (corresponds to a totalized flow rate of approx. 30 l/h when installed in the JUMO flow fitting (part no.: 00392611))
Measuring ranges	0.05 to 2 mg/l (ppm) 0.05 to 20 mg/l (ppm)
Dissolution	
Measuring range 2 mg/l	0.001 mg/l
Measuring range 20 mg/l	0.01 mg/l
Accuracy	After calibration under replicable conditions (25 °C, pH 7.2 in drinking water)
Measuring range 2 mg/l	< 1 % of the measuring range end value (with 0.4 und 1.6 mg/l)
Measuring range 20 mg/l	< 0.1 % of the measuring range end value (with 1.5 mg/l)
Slope drift	Approx. < -1 % per month under replicable conditions (25 °C, pH 7.2 in drinking water)
Response time $_{t90}$	Approx. 60 s
Operating temperature	Prerequisite: no ice crystals in the measurement medium
Measuring water	0 to 50 °C
Environment	0 to 55 °C
Temperature compensation	Automatic, using integrated temperature probe, max. temperature change: 5 °C per hour, avoid temperature jumps
pH value of area of application	pH 1 to pH 12
Zero point adjustment	Not required
Slope adjustment	On evaluation unit/controller using analytical determination
Disturbances	
Chlorine (Cl_2)	Factor 0.1
Ozone (O_3)	Factor 25
Pressure resistance	No pressure fluctuations admissible; pressure-free operation (atmospheric pressure) recommended
Absolute pressure	Max. 2 bar
Relative pressure	Max. 1 bar
Materials	Elastomer membrane, PVC-U, stainless steel 1.4571
Dimensions	Dia. 25 mm, length 205 mm
Weight	Approx. 125 g

11.3 Sensors for ozone (O_3)

11.3.1 Version with output signal 4 to 20 mA (type 202634/50)

Area of application	Swimming pool water, drinking water, service water and process water **This must not contain any surfactants**
Measuring principle	Membrane-covered, amperometric, two-electrode system with integrated electronic components
Membrane type	Hydrophobic PTFE membrane
Measuring cable connection	2-pole terminal connection (2 × 1 mm^2)
Voltage supply	U_B DC 12 to 30 V (galvanic isolation required)
Electromagnetic compatibility	According to EN 61326-1
Interference emission	Class B
Interference immunity	Industrial requirements
Output signal	4 to 20 mA
Burden/current consumption	≤ (U_B - 11 V) ÷ 0.02 A
Settling time	Approx 1 h for initial startup
Inflow speed	Approx. 15 cm/s (corresponds to a totalized flow rate of approx. 30 l/h when installed in the JUMO flow fitting (part no.: 00392611))
Measuring ranges	0.005 to 0.5 mg/l (ppm) 0.005 to 2 mg/l (ppm) 0.05 to 10 mg/l (ppm) 0.05 to 20 mg/l (ppm)
Dissolution	
Measuring ranges 0.5, 2 mg/l	0.001 mg/l
Measuring ranges 10, 20 mg/l	0.01 mg/l
Slope drift	Approx. < -1 % per month under replicable conditions (25 °C, pH 7.2 in drinking water)
Response time $_{t90}$	Approx. 15 seconds
Operating temperature	Prerequisite: no ice crystals in the measurement medium
Measuring water	0 to 45 °C
Environment	0 to 55 °C
Temperature compensation	Automatic, using integrated temperature probe, avoid temperature jumps
Zero point adjustment	Not required
Slope adjustment	On evaluation unit/controller using analytical determination
pH value of area of application	pH 2 to pH 11
Disturbances	
Chlorine (Cl_2)	Factor 0.03
Chlorine dioxide (ClO_2)	Factor 0.7
Pressure resistance	No pressure fluctuations admissible; pressure-free operation (atmospheric pressure) recommended.
Absolute pressure	Max. 2 bar
Relative pressure	Max. 1 bar
Materials	Semi-permeable membrane, PVC-U
Dimensions	Dia. 25 mm, length 220 mm
Weight	Approx. 125 g

11.3.2 Version with digital interface output signal (type 202634/60)

Area of application	Swimming pool water, drinking water, service water and process water **This must not contain any surfactants**
Measuring principle	Membrane-covered, amperometric, two-electrode system with integrated electronic components
Membrane type	Hydrophobic PTFE membrane
Measuring cable connection	5-pole flange connector, M12
Voltage supply	U_B DC 9 to 30 V (galvanically isolated in the sensor)
Electromagnetic compatibility	According to EN 61326-1
Interference emission	Class B
Interference immunity	Industrial requirements
Output signal	Modbus RTU
Burden/current consumption	56 to 20 mA
Settling time	Approx 1 h for initial startup
Inflow speed	Approx. 15 cm/s (corresponds to a totalized flow rate of approx. 30 l/h when installed in the JUMO flow fitting (part no.: 00392611))
Measuring ranges	0.005 to 2 mg/l (ppm) 0.05 to 10 mg/l (ppm)
Dissolution	
Measuring range 2 mg/l	0.001 mg/l
Measuring range 10 mg/l	0.01 mg/l
Slope drift	Approx. < -1 % per month under replicable conditions (25 °C, pH 7.2 in drinking water)
Response time $_{t90}$	Approx. 15 seconds
Operating temperature	Prerequisite: no ice crystals in the measurement medium
Measuring water	0 to 45 °C
Environment	0 to 55 °C
Temperature compensation	Automatic, using integrated temperature probe, avoid temperature jumps
Zero point adjustment	Not required
Slope adjustment	On evaluation unit/controller using analytical determination
pH value of area of application	pH 2 to pH 11
Disturbances	
Chlorine (Cl_2)	Factor 0.03
Chlorine dioxide (ClO_2)	Factor 0.7
Pressure resistance	No pressure fluctuations admissible; pressure-free operation (atmospheric pressure) recommended.
Absolute pressure	Max. 2 bar
Relative pressure	Max. 1 bar
Materials	Semi-permeable membrane, PVC-U
Dimensions	Dia. 25 mm, length 205 mm
Weight	Approx. 125 g

11.4 Sensors for ozone (O_3) with membranes that are insensitive to chemicals

11.4.1 Version with output signal 4 to 20 mA (type 202634/52)

Area of application	All types of water treatment (e.g. bottle washing machine, CIP plant, rinser, tap water, seawater) **Surfactants are tolerated**
Measuring principle	Membrane-covered, amperometric, two-electrode system with integrated electronic components
Membrane type	The membrane is impervious to chemicals and surfactants
Measuring cable connection	2-pole terminal connection (2 × 1 mm^2)
Voltage supply	U_B DC 12 to 30 V (galvanic isolation required)
Electromagnetic compatibility	According to EN 61326-1
Interference emission	Class B
Interference immunity	Industrial requirements
Output signal	4 to 20 mA
Burden/current consumption	≤ (U_B - 11 V) ÷ 0.02 A
Settling time	Approx 1 h for initial startup
Inflow speed	Approx. 15 cm/s (corresponds to a totalized flow rate of approx. 30 l/h when installed in the JUMO flow fitting (part no.: 00392611))
Measuring ranges	0.05 to 2 mg/l (ppm) 0.05 to 10 mg/l (ppm)
Dissolution	
Measuring range 2 mg/l	0.001 mg/l
Measuring range 10 mg/l	0.01 mg/l
Accuracy	After calibration under replicable conditions (25 °C, pH 7.2 in drinking water)
Measuring range 2 mg/l	< 1 % of the measuring range end value (with 0.4 mg/l) < 3 % of the measuring range end value (with 1.6 mg/l)
Measuring range 10 mg/l	< 1 % of the measuring range end value (with 4 mg/l)
Response time $_{t90}$	Approx. 8 min
Operating temperature	Prerequisite: no ice crystals in the measurement medium
Measuring water	0 to 50 °C
Environment	0 to 55 °C
Temperature compensation	Automatic, using integrated temperature probe, avoid temperature jumps
pH value of area of application	pH 4 to pH 9
Zero point adjustment	Not required
Slope adjustment	On evaluation unit/controller using analytical determination
Disturbances	
Chlorine (Cl_2)	Factor 0.015
Chlorine dioxide (ClO_2)	Factor 0.06
Pressure resistance	No pressure fluctuations admissible; pressure-free operation (atmospheric pressure) recommended
Absolute pressure	Max. 2 bar
Relative pressure	Max. 1 bar
Protection type	IP65
Materials	Elastomer membrane, PVC-U, stainless steel 1.4571
Dimensions	Dia. 25 mm, length 220 mm
Weight	Approx. 125 g

11.4.2 Version with digital interface output signal (type 202634/62)

Area of application	All types of water treatment (e.g. bottle washing machine, CIP plant, rinser, tap water, seawater) **Surfactants are tolerated**
Measuring principle	Membrane-covered, amperometric, two-electrode system with integrated electronic components
Membrane type	The membrane is impervious to chemicals and surfactants
Measuring cable connection	5-pole flange connector, M12
Voltage supply	U_B DC 9 to 30 V (galvanically isolated in the sensor)
Electromagnetic compatibility	According to EN 61326-1
Interference emission	Class B
Interference immunity	Industrial requirements
Output signal	Modbus RTU
Burden/current consumption	56 to 20 mA
Settling time	Approx 1 h for initial startup
Inflow speed	Approx. 15 cm/s (corresponds to a totalized flow rate of approx. 30 l/h when installed in the JUMO flow fitting (part no.: 00392611))
Measuring ranges	0.05 to 2 mg/l (ppm) 0.05 to 10 mg/l (ppm)
Dissolution	
Measuring range 2 mg/l	0.001 mg/l
Measuring range 10 mg/l	0.01 mg/l
Accuracy	After calibration under replicable conditions (25 °C, pH 7.2 in drinking water)
Measuring range 2 mg/l	< 1 % of the measuring range end value (with 0.4 mg/l) < 3 % of the measuring range end value (with 1.6 mg/l)
Measuring range 10 mg/l	< 1 % of the measuring range end value (with 4 mg/l)
Response time $_{t90}$	Approx. 8 min
Operating temperature	Prerequisite: no ice crystals in the measurement medium
Measuring water	0 to 50 °C
Environment	0 to 55 °C
Temperature compensation	Automatic, using integrated temperature probe, avoid temperature jumps
pH value of area of application	pH 4 to pH 9
Zero point adjustment	Not required
Slope adjustment	On evaluation unit/controller using analytical determination
Disturbances	
Chlorine (Cl_2)	Factor 0.015
Chlorine dioxide (ClO_2)	Factor 0.06
Pressure resistance	No pressure fluctuations admissible; pressure-free operation (atmospheric pressure) recommended
Absolute pressure	Max. 2 bar
Relative pressure	Max. 1 bar
Protection type	IP68
Materials	Elastomer membrane, PVC-U, stainless steel 1.4571
Dimensions	Dia. 25 mm, length 205 mm
Weight	Approx. 125 g

11.5 All sensors

11.5.1 Maintenance, storage, and transport

Maintenance	
Inspection of the measuring signal	Regularly, at least once a week
Replacement of the membrane cap	Once a year (depending on the quality of the water)
Replacement of the electrolyte	Every 3 to 6 months
Storage	
Sensor	Can be stored indefinitely in a frost-free and dry place, without electrolyte and between +5 and 40 °C
Membrane cap	Can be stored indefinitely in the original packaging at +5 to 40 °C Used membrane caps cannot be stored!
Electrolyte	At least 1 year at +5 to 35 °C, or up to the specified expiry date (in original bottle, away from sunlight)
Transport	+5 to 50 °C (sensor, membrane cap, electrolyte)

部件名称 Product group: 202630/31/32/34/36	有毒有害物质或元素 Hazardous substances					
	铅（Pb）	汞（Hg）	镉（Cd）	六价铬（Cr(VI)）	多溴联苯（PBB）	多溴二苯醚（PBDE）
外壳 Housing (Gehäuse)	○	○	○	○	○	○
过程连接 Process connection (Prozessanschluss)	○	○	○	○	○	○
-螺母 Nut (Mutter)	○	○	○	○	○	○
螺钉 Screw (Schraube)	○	○	○	○	○	○

本表格依据 SJ/T 11364-2014**的规定编制。**

(This table is prepared in accordance with the provisions of SJ/T 11364-2014.)

O：**表示**该有害物质在该部件所有均质材料中的含量均在 GB/T 26572 规定的限量要求以下。

(O: Indicates that said hazardous substance contained in all of the homogeneous materials for this part is below the limit requirement of GB/T 26572.)

X：**表示**该有害物质至少在该部件的某一均质材料中的含量超出 GB/T 26572 规定的限量要求。

(X: Indicates that said hazardous substance contained in one of the homogeneous materials used for this part is above the limit requirement of GB/T 26572.)

JUMO GmbH & Co. KG
Street address:
Moritz-Juchheim-Straße 1
36039 Fulda, Germany
Delivery address:
Mackenrodtstraße 14
36039 Fulda, Germany
Postal address:
36035 Fulda, Germany
Phone: +49 661 6003-0
Fax: +49 661 6003-607
Email: mail@jumo.net
Internet: www.jumo.net

JUMO UK LTD
JUMO House
Temple Bank, Riverway
Harlow, Essex, CM20 2DY, UK
Phone: +44 1279 63 55 33
Fax: +44 1279 62 50 29
Email: sales@jumo.co.uk
Internet: www.jumo.co.uk

JUMO Process Control, Inc.
6724 Joy Road
East Syracuse, NY 13057, USA
Phone: +1 315 437 5866
Fax: +1 315 437 5860
Email: info.us@jumo.net
Internet: www.jumousa.com