JUMO tecLine TC

Sensor for total chlorine
Typ 202631



Operating Manual

20263100T90Z001K000

V2.00/EN/00585736

Contents

1 Introduction 6

1.1 Safety information 6
1.1.1 General Information 6
1.1.2 Warning symbols 6
1.1.3 Note symbols 6
1.1.4 Intended use 6

2 Description 7

2.1 Areas of application 7
2.2 Design 7
2.3 Output signal 7
2.4 Suitable indicators/transmitters/controllers 8
2.4.1 Transmitters/controllers for sensors with an output signal of 4 to 20 mA (type 202631/44) 8
2.4.2 Transmitters/controllers for sensors with a digital interface (type 202631/52) 8
2.5 Sensor details 9
2.6 Important information for use 10

3 Identifying the device version 11

3.1 Nameplate 11
3.2 Order details 11
3.3 Scope of delivery 12
3.4 Accessories 12

4 Mounting 14

4.1 Important information 14
4.2 Combination fitting (type 202811/10) 16
4.2.1 Mounting the combination fitting 16
4.2.2 Installing the sensor 17
4.3 Flow fitting for membrane-covered sensors (type 202811/30) 19
4.3.1 Mounting the fitting 19
4.3.2 Installing the sensor 20
4.4 Flow monitor for disinfection measurands (type 202811/20) 21
4.4.1 Mounting the flow monitor 21

5 Electrical connection 22

5.1 Sensor with output signal 4 to 20 mA (type 202631/44) 22
5.1.1 General requirements 22
5.1.2 Terminal assignment 22
5.1.3 Connection 22
5.2 Sensor with digital interface output signal (type 202631/52) 23
5.2.1 General requirements 23
5.2.2 Terminal assignment 23
5.3 Flow monitoring (combination fitting and flow monitor) 24

Contents

5.3.1 Terminal assignment . . . 24
5.4 Combination fitting temperature probe . . . 24
5.4.1 Terminal assignment . . . 24
5.5 Example of a measuring section with the sensor type 202631/44 . . . 25
5.5.1 General information . . . 25
5.5.2 Connection example . . . 25

6 Startup . . . 26

6.1 Important notes for screwing the membrane cap on and off . . . 26
6.2 Filling up the reference electrolyte . . . 27
6.3 Minimum inflow . . . 29
6.3.1 Adjusting the minimum inflow (combination fitting and flow monitor) . . . 29
6.4 Settling time . . . 29

7 Maintenance . . . 30

7.1 Cleaning the electrode finger tip/changing the electrolyte and the membrane cap . . . 30
7.2 Removing calcium deposits from the membrane cap . . . 31
7.3 Storage . . . 31
7.4 Consumable material . . . 32

8 Calibration . . . 33

8.1 General information . . . 33
8.2 Calibrating with an indicator/controller . . . 33

9 Overcoming errors and malfunctions . . . 35

9.1 General troubleshooting . . . 35
9.1.1 Fault symptom: Sensor cannot be calibrated/measured value deviates from DPD measurement . . . 35
9.1.2 Fault symptom: Measured value is unstable . . . 35
9.1.3 Fault symptom: Overload . . . 36
9.1.4 Fault symptom: Undermodulation . . . 36
9.1.5 Fault symptom: Green LED does not light up or flickers . . . 37
9.1.6 Fault symptom: Sensor fails to return an output signal . . . 37
9.1.7 Output signal of the sensor in case of undermodulation/overload . . . 37
9.2 Specific troubleshooting on the sensor . . . 38
9.2.1 Testing the leak-tightness of the membrane cap . . . 38
9.2.2 Electronics test . . . 38
9.2.3 Testing the zero point . . . 38
9.2.4 Measurement signal test . . . 39
9.2.5 Testing the environment . . . 39

10 Technical data . . . 40

10.1 Maintenance, storage, and transport . . . 41
10.2 sensor slope depending on the pH value . . . 41

11 China RoHS 42

1 Introduction

1.1 Safety information

1.1.1 General Information

This manual contains information that must be observed in the interest of your own safety and to avoid material damage. This information is supported by symbols which are used in this manual as indicated.

Please read this manual before starting up the device. Store this manual in a place that is accessible to all users at all times.

If difficulties occur during startup, please do not intervene in any way that could jeopardize your warranty rights!

1.1.2 Warning symbols



WARNING!

This symbol in connection with the signal word indicates that **personal injury** may occur if the respective precautionary measures are not carried out.

NOTICE

This note in connection with the signal word indicates that **material damage or data loss** will occur if the respective precautionary measures are not taken.

1.1.3 Note symbols



NOTE!

This symbol refers to **important information** about the product, its handling, or additional benefits.

1.1.4 Intended use

This membrane-covered, amperometric sensor is used to measure the total chlorine concentration in water.

The sensor acquires the total of "free chlorine" from anorganic chlorine products (chlorine gas, hypochlorite, etc.) **and** "combined chlorine" (chloramine).

Typical application areas include measurements in swimming pool water, drinking water, and seawater.

The sensor is not suitable for detecting the absence of total chlorine.

2 Description

2.1 Areas of application

This membrane-covered, amperometric sensor is used to measure the total chlorine concentration in water.

The sensor for total chlorine can be used to determine the following anorganic chlorination agents: chlorine bleaching solution (NaOCl), calcium hypochlorite ($Ca(OCl)_2$), chlorine gas, and electrolytically generated chlorine.

The following types of chlorine are acquired:

- "free chlorine" from anorganic chlorine products (chlorine gas, hypochlorite, etc.)
- "combined chlorine", chloramine

The sensor has an extremely reduced pH dependence (⇨"sensor slope depending on the pH value ", page 41).

The sensor is not suitable for detecting the absence of chlorine.

2.2 Design

The sensor has a membrane-covered, amperometric, potentiostatic three-electrode measuring system.

The cathode is made of gold (Au). The anode is made of silver (Ag) and has a coating of silver halide (AgHal). The counter electrode is made of stainless steel.

For the measuring methods used here, chlorine diffuses through the membrane from the measurement medium and, combined with the electrolytes, triggers an electrical signal at the working electrode. This signal is proportional to the concentration of chlorine and is amplified by the electronics. The measurement signal is independent of the temperature of the media thanks to integrated temperature compensation.

2.3 Output signal

As the measurement signal of the amperometric sensors is temperature-dependent, an automatic temperature compensation is carried out by an integrated NTC resistor. The recommended temperature range is 0[1] to +45 °C.

In the analog version, the integrated sensor electronics provide a current signal of 4 to 20 mA; in the digital version, they provide a Modbus RTU interface signal.

A downstream device (indicator, controller, recorder, PLC, etc.) is used for calibration.

The sensor can be connected directly to any suitable indicators and controllers.[2] They provide the voltage supply required for the sensor and allow for easy calibration of the measuring system.

---

[1] Prerequisite: no ice crystals in the measuring water.

[2] When connecting the sensor with a digital interface to the JUMO AQUIS touch S/P, we recommend the use of a JUMO digiLine hub (type 203590) with an external power supply.

2 Description

2.4 Suitable indicators/transmitters/controllers

2.4.1 Transmitters/controllers for sensors with an output signal of 4 to 20 mA (type 202631/44)

Type	Features
JUMO AQUIS 500 AS	Single-channel (4 to 20 mA) indicating device/controller, additional temperature input, binary input, up to two analog and switching outputs
JUMO dTRANS AS 02	Modular multichannel transmitter/controller for standard signals, PROFIBUS-DP, RS422/485, data logger using optional boards
JUMO AQUIS touch S/P	Modular multichannel measuring devices for liquid analysis with integrated controller and paperless recorder, USB host, USB device, Modbus, PROFIBUS-DP and Ethernet using optional boards

2.4.2 Transmitters/controllers for sensors with a digital interface (type 202631/52)

Type	Features
JUMO AQUIS 500 RS	Single-channel (Modbus RTU) indicating device/controller, additional temperature input, binary input, up to two analog and switching outputs
JUMO AQUIS touch S/P	Modular multichannel measuring devices for liquid analysis with integrated controller and paperless recorder, USB host, USB device, Modbus, PROFIBUS-DP and Ethernet using optional boards

2.5 Sensor details

Type 202631/44 (4 to 20 mA version)

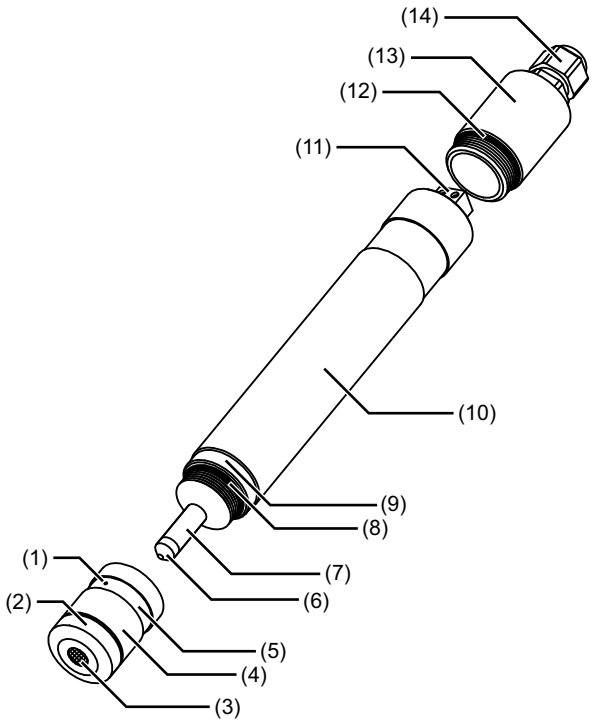

Type 202631/52 (Modbus RTU version)

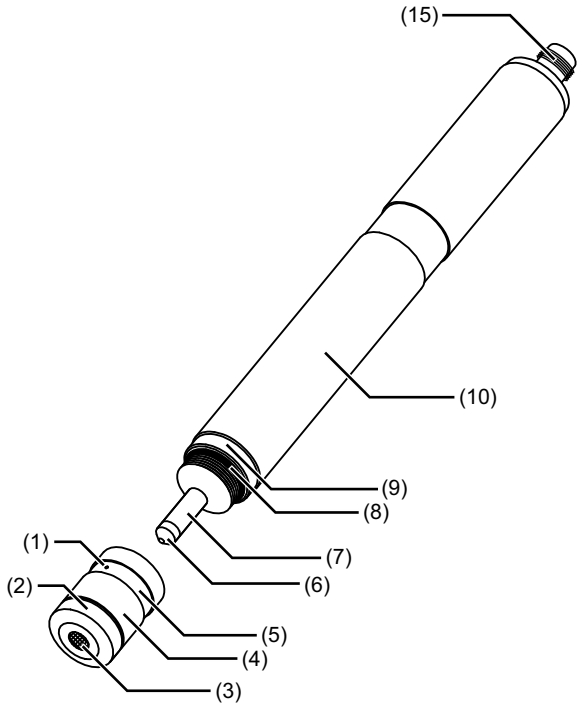

(1) Valve opening
(2) Membrane holder (stainless steel)
(3) Membrane
(4) Membrane cap
(5) Transparent cover (hose ring)
(6) Measuring electrode
(7) Electrode finger (reference electrode)
(8) O-ring
(9) Counter electrode (stainless steel)
(10) Electrode shaft with integrated electronics
(11) 2-pole terminal for measuring cable connection
(12) O-ring
(13) Cover
(14) Pg screw connection
(15) M12 flange connector

2 Description

2.6 Important information for use

NOTICE

An unsuitable measuring environment may produce incorrect measurement results.

Using the sensors without the use of suitable flow fittings will lead to incorrect measurement results.

▶ In order to ensure error-free measurements, the sensors must be installed in suitable flow fittings, see chapter 4.2 "Combination fitting (type 202811/10)", page 16 or chapter 4.3 "Flow fitting for membrane-covered sensors (type 202811/30)", page 19.

NOTICE

Unsuitable measurement media may produce incorrect measurement results.

Using the sensors to measure contaminated media may lead to incorrect measurement results.

▶ In order to ensure error-free measurements, the measurement media must have the qualities of swimming pool or drinking water and must not contain any solids.

NOTICE

Harmful substances may lead to incorrect measurement results and cause damage to the membrane caps.

Using the sensors to measure media containing hydrophobic substances may lead to incorrect measurement results. Hydrophobic substances can damage the membrane caps.

▶ In order to ensure error-free measurements, the measurement media must not contain hydrophobic substances (e.g. oil or grease).

NOTICE

Incorrect handling may cause damage to the membrane caps.

Screwing an unfilled membrane cap fully onto the sensor before startup may cause mechanical damage to the membrane. In addition, screwing on a filled membrane cap without placing the sensor into the measurement media can cause salt or gel residues to be deposited.

▶ Screwing on the membrane cap without then starting up the sensor should be avoided.

In particular cases, it must be checked if the presence of surfactants will cause a significant reduction in the service life of this sensor with its hydrophilic membrane; however, in these cases the media must should have qualities similar to drinking or swimming pool water.

The pH-dependence of the measurement is greatly reduced within the range of pH 4 to 12.

As there must be an electrical connection between the counter electrode and the measurement medium, the measurement medium must have a minimum conductivity of approx. 10 µS/cm. This means that the sensor is not suitable for use in highly-purified water, or similar.

NOTICE

The membranes may be damaged by high pressure.

Operating the sensors with increased pressure may cause the membranes to rip.

▶ The sensors should be operated under as little pressure as possible, with the measurement media able to flow freely. If this is not possible, the sensors can be operated under a **constant** pressure of up to 3 bar (relative pressure) or 4 bar (absolute pressure). Fluctuations in pressure must be avoided!

3.1 Nameplate

Position

The nameplate is glued to the top of the sensor.

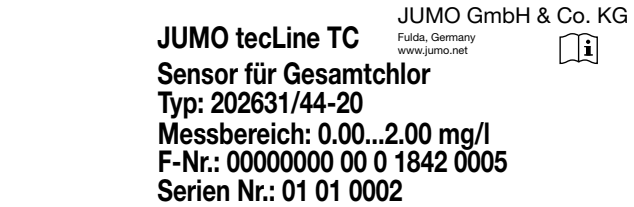

Contents

The nameplate contains important information. This includes:

Description	Designation on the nameplate	Example
Device type	Type	202631/44-20
Fabrication number	F no.	0000000000018420005

Device type (Typ)

Compare the specifications on the nameplate with your order documents. The supplied device version can be identified using the order code in chapter 3.2 "Order details", page 11.

Fabrication number (F no.)

The fabrication number provides information such as the **production date** (year/week). The figures in question are in positions 12 to 15 (from the left).

Example: F no. = 000000000001842**0**005. The device was produced in the year 20**18**, in the **42nd** week.

3.2 Order details

	(1)	Basic type
202631		JUMO tecLine TC
		Sensor for total chlorine
	(2)	**Basic type extension**
44		Output signal 4 to 20 mA
52		Digital output signal
	(3)	**Measuring range**
10		0.00 to 0.500 mg/l (ppm)
20		0.00 to 2.00 mg/l (ppm)
25		0.00 to 5.00 mg/l (ppm)
35		0.00 to 10.00 mg/l (ppm)
37		0.00 to 20.00 mg/l (ppm)

	(1)		(2)		(3)
Order code		/		-	
Order example	202631	/	44	-	20

3 Identifying the device version

3.3 Scope of delivery

Type 202631/44	Two-wire sensor, incl. membrane cap, electrolyte, and special abrasive paper for cathode cleaning and operating manual
Type 202631/52	Modbus RTU sensor, incl. membrane cap, electrolyte, and special abrasive paper for cathode cleaning and operating manual

3.4 Accessories

Fittings

Designation	Part no.
Combination fitting for mounting several electrochemical sensors[a]	00607325
Individual fitting for mounting a membrane-covered sensor	00392611
Mounting bracket for individual fitting	00455706
Flow monitor for monitoring the minimum inflow[b]	00605507

[a] With integrated flow monitor, mini ball valve included.

[b] For flow monitoring in connection with the individual fitting.

Spare part sets and electrolytes

Designation	Part no.
Spare parts set for 202631 (1 x membrane cap, fine abrasive paper)	00687804
Spare parts set for 202631 for seawater (1 x membrane cap, fine abrasive paper)	00687805
Special electrolyte for 202631 (100 ml)	00585104

Accessories for sensors with a digital interface (type 202631/52)

Designation	Part no.
JUMO digiLine hub[a]	00646871
JUMO power supply unit for JUMO digiLine hub[a]	00661597

[a] When connecting multiple sensors with a digital interface (type 20263x) to the JUMO AQUIS touch S/P, the JUMO digiLine hub and an external power supply (e.g. part no. 00661597) are required. For further accessories see data sheet 202705.

Transmitters/controllers for sensors with an output signal of 4 to 20 mA (type 202631/44)

Designation	Part no.
JUMO AQUIS 500 AS, type 202568/20-888-888-888-310-310-23/000 (for further versions, please refer to data sheet 202568) 	00528718
JUMO dTRANS AS 02, type: 202553/01-8-01-4-0-00-23/000 (fur further versions, please refer to data sheet 202553) 	00550842
JUMO AQUIS touch S/P 	Refer to data sheets 202580/81

Transmitters/controllers for sensors with a digital interface (type 202631/52)

Designation	Part no.
JUMO AQUIS 500 RS, type 202569/20-654-888-888-310-310-23/000 (for further versions, please refer to data sheet 202569) 	00602275
JUMO AQUIS touch S/P  	Refer to data sheets 202580/81

4 Mounting

4.1 Important information

NOTICE

An unsuitable measuring environment may produce incorrect measurement results.

Using the sensors without the use of suitable flow fittings will lead to incorrect measurement results.

▶ In order to ensure error-free measurements, the sensors must be installed in suitable flow fittings, see chapter 4.2 "Combination fitting (type 202811/10)", page 16 or chapter 4.3 "Flow fitting for membrane-covered sensors (type 202811/30)", page 19.

NOTICE

The membranes may be damaged by high pressure.

Operating the sensors with increased pressure may cause the membranes to rip.

▶ The sensors should be operated under as little pressure as possible, with the measurement media able to flow freely. If this is not possible, the sensors can be operated under a **constant** pressure according to the specifications in chapter 10 "Technical data", page 40. Fluctuations in pressure must be avoided.

NOTICE

Air bubbles may lead to incorrect measurement results.

The presence of air bubbles in the measurement medium in front of the membrane may produce incorrect measurement results.

▶ In order to ensure error-free measurements, the measurement media must be free of air bubbles.

NOTICE

Interruptions in the voltage supply may produce incorrect measurement results.

An interruption in the voltage supply (e.g. in interval operation) may produce incorrect measurement results. The sensors require a settling time period to determine the correct measurement.

▶ In order to ensure error-free measurements, the sensors and transmitters must be permanently supplied with voltage, even in interval operation.

NOTICE

Dry electrolytes may produce incorrect measurement results.

If there is no medium to measure when the membrane cap is filled, a build-up of gel residue on the inside of the membrane may cause incorrect measurement results.

▶ For sensors with electrolyte-filled membrane caps, the sensor fittings should be prevented from draining or dry running.

NOTICE

Deposits on the membrane may lead to incorrect measurement results.

If there is no disinfectant (chlorine) in the measurement medium for more than 24 hours, this will lead to incorrect measurement results due to deposits (biofilm) on the membrane.

▶ You should avoid operating the sensors with measurement medium which does not contain chlorine. After operation in a chlorine-free medium, a settling time period is to be expected. It may be necessary to delay switching on dosing.

NOTICE

Solids in the measurement medium may lead to incorrect measurement results.

The measurement medium must be visually clean. Solids in the measurement medium can lead to deposits on the membrane or to complete blocking of the membrane.

▶ If there are solids in the medium, a dirt filter must be installed at the inlet of the sensor fitting.

NOTICE

Impurities may produce incorrect measurement results.

Using the sensors in media containing corrosion protection agents or water hardness stabilizers will lead to incorrect measurement results.

▶ Disturbances in the measurement medium, such as chlorine dioxide and ozone, should be prevented due to the cross sensitivities of the sensors.



NOTE!

If no chlorine is dosed over a long period of time, the sensors must be disconnected from the transmitter/controller and stored correctly; please refer to chapter 7.3 "Storage", page 31.

4 Mounting

4.2 Combination fitting (type 202811/10)

4.2.1 Mounting the combination fitting

The combination fitting can be mounted on a wall or an installation panel with the mounting holes (1) using two commercially available M5 cylinder head screws (dia. 5.5 mm, countersink according to DIN 974-1: dia. 11 mm, 5 mm deep, not included in the scope of delivery).

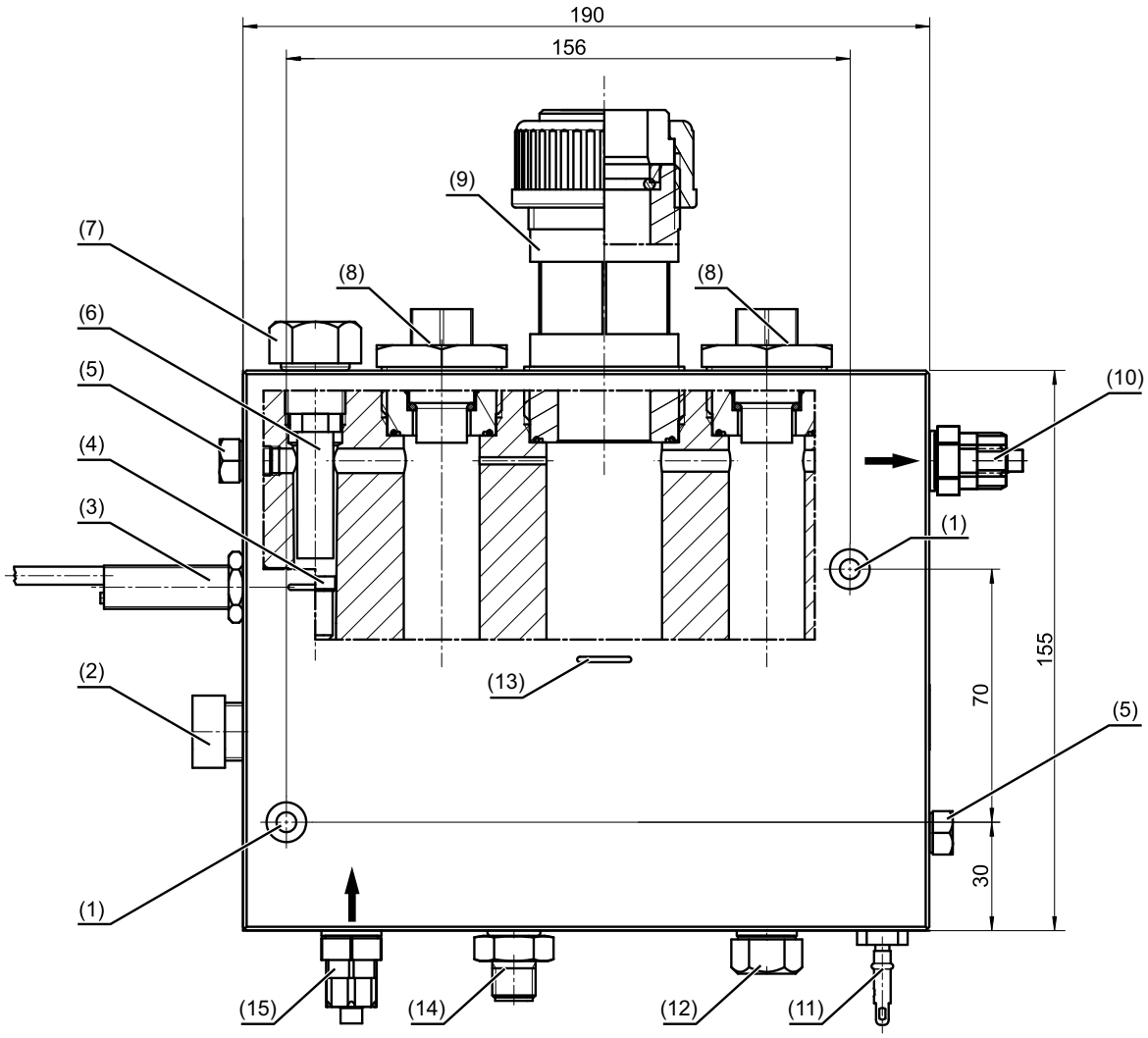

(1) Mounting hole for cylinder head screws M5 (dia. 5.5 mm; countersink: dia. 11 mm, 5 mm deep)
(2) Valve insert for flow control
(3) Inductive proximity sensor[a](flow monitoring), M12 x 1 thread
(4) Floating body for flow monitoring[a]
(5) Sealing screw M8
(6) Extension for M8 sealing screw
(7) Sealing screw G 3/8
(8) Mounting closed with dummy plug for pH/Redox sensor with Pg 13.5 thread
(9) Mounting for membrane-covered sensor with dia. 25 mm
(10) Hose connection for measuring water outflow, connection G 1/4, for hose 6 × 8 (inner dia. 6 mm, outer dia. 8 mm)
(11) M8 ground rod[a]

(12) Sealing screw G 1/4 (opening for optional mini ball valve for sampling)
(13) Indicator for sensor immersion depth
(14) Temperature probe[a]
(15) Hose connection for measuring water inflow, connection to fitting G 1/4, for hose 6 × 8 (inner dia. 6 mm, outer dia. 8 mm)

[a] optionally

4.2.2 Installing the sensor

Overview

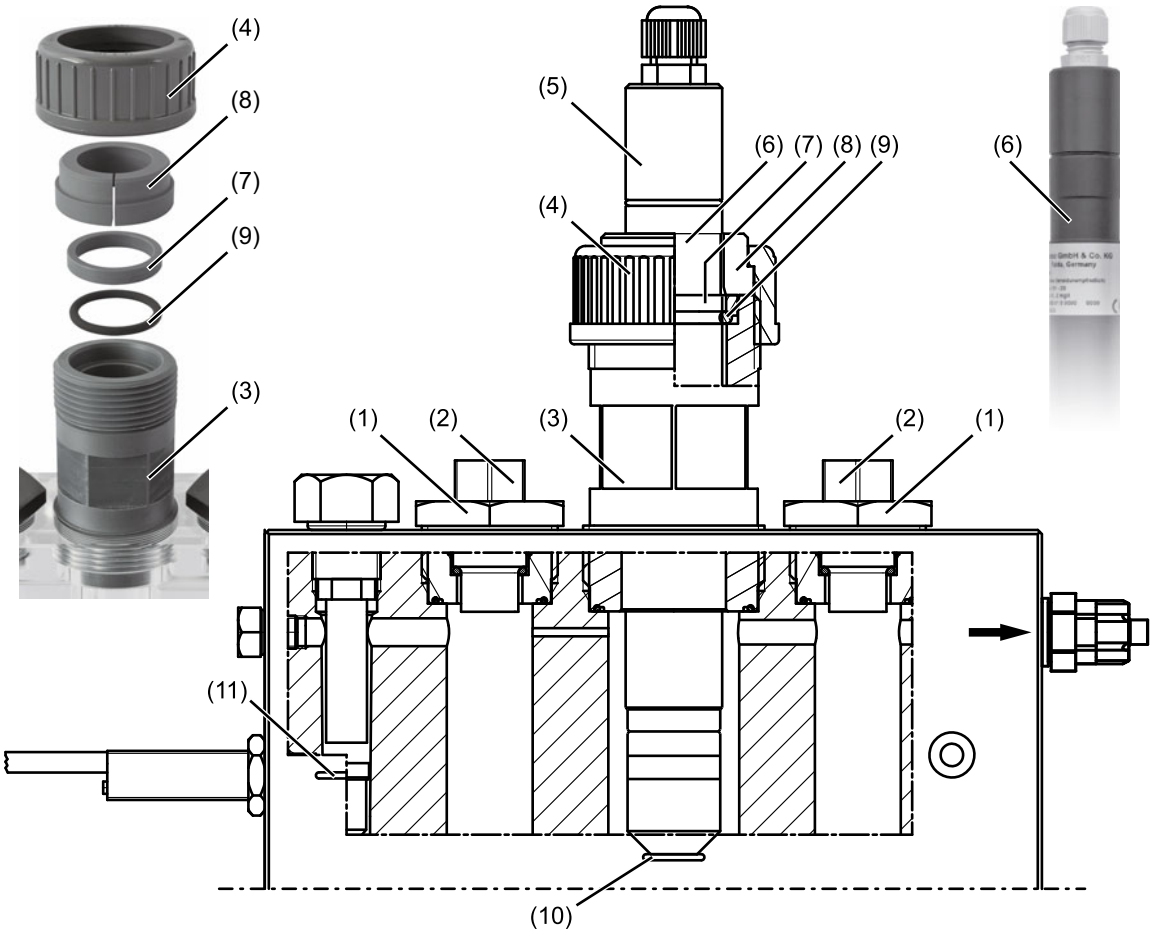

(1) Mounting for pH/Redox sensors
(2) Pg 13.5 pressure screw
(3) Mounting for membrane-covered sensor
(4) Union nut
(5) Membrane-covered sensor
(6) Sensor slot
(7) Pressure ring
(8) Stepped collar
(9) O-Ring
(10) Mark for sensor immersion depth
(11) Mark for floating body height

4 Mounting

Installation

NOTICE

Leaks due to incorrect installation

Pollutants on the thread of the union nut (4), the pressure ring (7), the stepped collar (8), the O-ring (9), or a hardened O-ring can cause the fitting to leak when the sensor (5) is installed.

▶ When assembling or installing the sensor, make sure that the O-rings and threads are clean and in good working order.

1. Before installing the sensors, make sure that the system is depressurized.
2. Close the shut-off valves in the inflow and outflow of the fitting.
3. Unscrew the union nut (4).
4. Remove the stepped collar (8). The pressure ring (7) and the O-ring (9) remain in the sensor mounting (3).
5. Slide the stepped collar from above onto the sensor (5) until it engages in the sensor slot (6). The step collar should now rotate easily on the sensor housing.
6. Insert the sensor with the mounted stepped collar into the sensor mounting (3) as far as it will go.
7. Screw the union nut (4) back onto the sensor mounting and tighten it hand-tight.

4.3 Flow fitting for membrane-covered sensors (type 202811/30)

4.3.1 Mounting the fitting

The flow fitting can be mounted to a wall or an installation panel using an optional mounting bracket (part no.: 00455706).

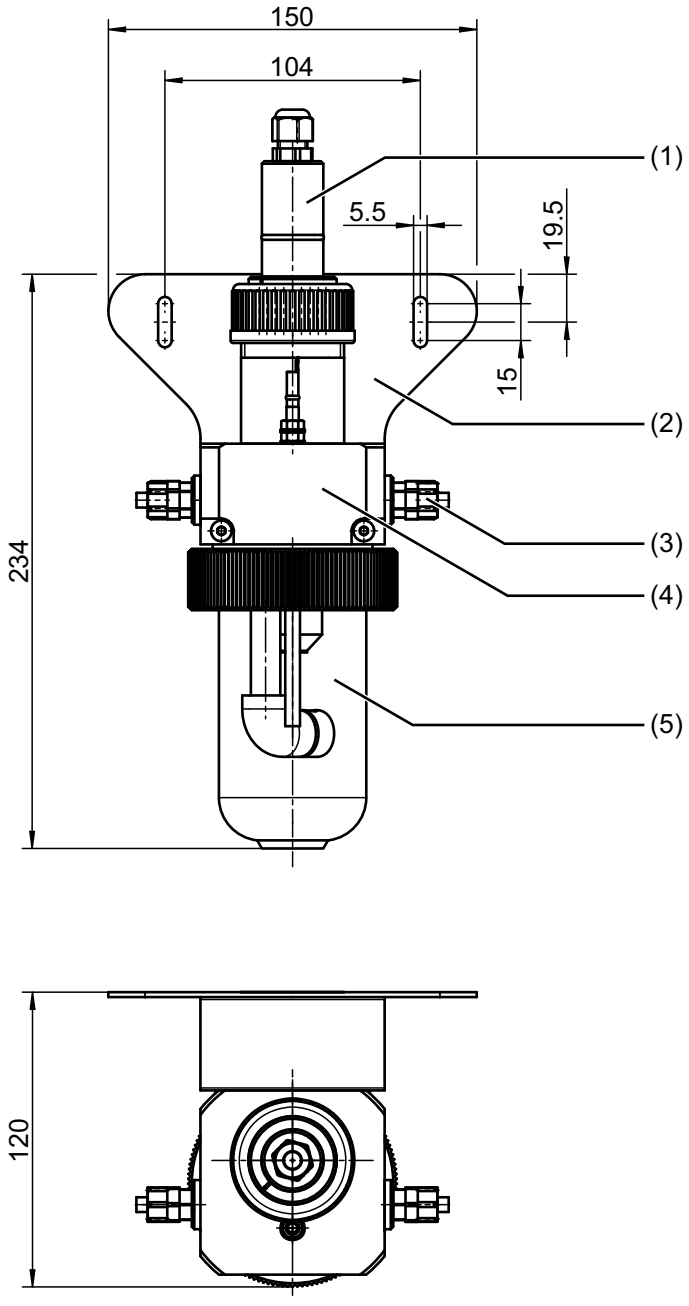

(1) Sensor
(2) Mounting bracket (optional)
(3) Connection G 1/4, for hose Ø 8 mm × 6 mm
(4) Fitting
(5) Removable measuring vessel (inspection glass)

4.3.2 Installing the sensor

Overview

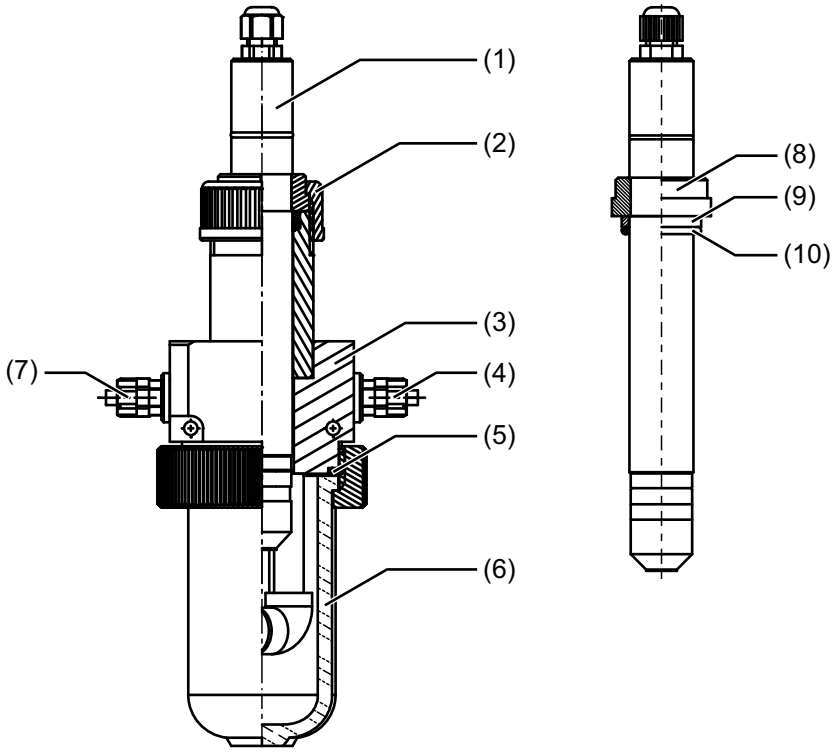

(1) Sensor
(2) Union nut
(3) Fitting housing
(4) G 1/4 A or DN 10 outlet lead
(5) O-ring
(6) Inspection glass
(7) G 1/4 A or DN 10 supply lead
(8) 1-inch stepped collar[a]
(9) Pressure ring[a]
(10) O-ring[a]

[a] Component of the flow fitting

Installation

NOTICE

Incorrect installation may cause leaks.

Pollutants on the thread of the union nut (2) or the O-rings (5, 10), or hardened O-rings can cause the fitting to leak when the sensor (1) is installed.

▶ When assembling or installing the sensor, you must ensure that the O-rings and threads are clean and in good working order.

NOTE!

The inspection glass (6) can be unscrewed from the fitting housing (3) for maintenance purposes.

1. First push the O-ring (10), then the pressure ring (9) and then the 1-inch stepped collar (8) onto the sensor (1) (from the Pg screw connection). The stepped collar (8) must snap into the groove.
2. Once the sensor has been prepared in this way, insert it into the flow fitting housing (3) and fix it in place with the union nut (2).

4.4 Flow monitor for disinfection measurands (type 202811/20)

4.4.1 Mounting the flow monitor

The flow monitor can be mounted to a wall or an installation panel using the **PP-40 pipe clip** (2) included in the scope of delivery.

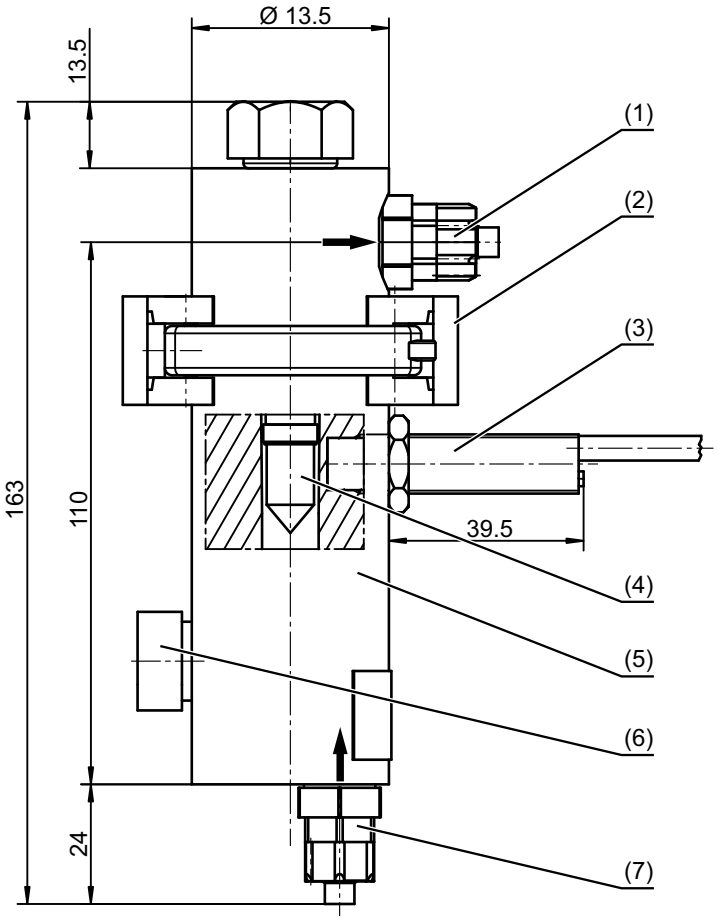

(1) Hose connection for measuring water outflow, connection G 1/4, for hose 6 × 8 (inner dia. 6 mm, outer dia. 8 mm)

(2) **PP-40 pipe clip**

(3) Inductive proximity sensor, M12 x 1 thread

(4) Floating body

(5) Flow body

(6) Needle valve insert for flow control

(7) Hose fitting for measuring water inflow, connection G 1/4, for hose 6 × 8 (inner dia. 6 mm, outer dia. 8 mm)

5 Electrical connection

5.1 Sensor with output signal 4 to 20 mA (type 202631/44)

5.1.1 General requirements

- Cable diameter of approx. 4 mm
- Conductor cross section of 2 x 0.25 mm^2
- Lay the signal lines isolated from cables with a voltage of > 60 V
- Use protected cables with twisted cores
- Keep away from large, electrical plants

5.1.2 Terminal assignment

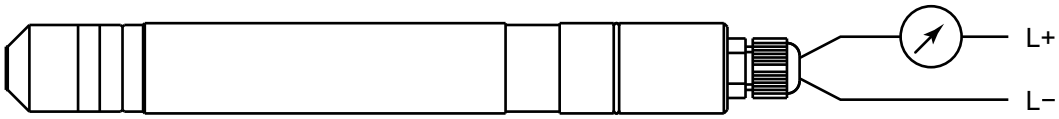

Function		Screw terminals
Voltage supply DC 12 to 30 V	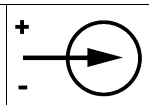	1 L+ 2 L-
Two-wire output of 4 to 20 mA, load-independent current of 4 to 20 mA in voltage supply	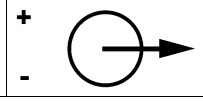	1 L+ 2 L-

5.1.3 Connection

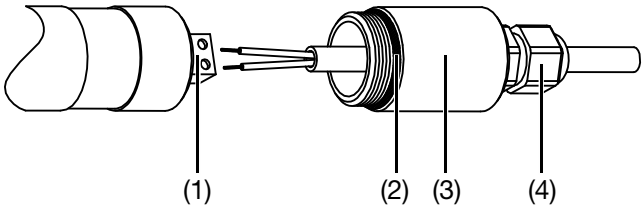

1. Push the cover (3) over the connecting cable.
2. Connect the wires on the terminals (1) in accordance with the terminal assignment.
3. Screw in the cover (3) by hand until the O-ring (2) is sealed.
4. Tighten the Pg screw connection (4).

NOTICE

Potential damage to the sensor

If the steps are not carried out in the correct order before disconnecting the wires, the connection area of the sensors may be damaged.

▶ Loosen the Pg screw connection before unscrewing the cover.

NOTE!

Screws protected by locking varnish must not be adjusted.

Any damage to the locking varnish will result in the loss of the manufacturer's guarantee.

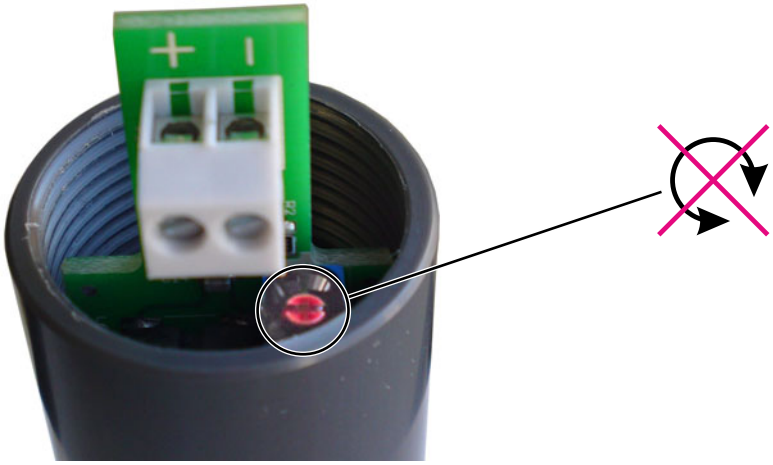

5.2 Sensor with digital interface output signal (type 202631/52)

5.2.1 General requirements

- Use connecting cable PN 00638333 (1.5 m) or PN 00638337 (5 m) or PN 00638341 (10 m) for connecting to JUMO AQUIS 500 RS or JUMO AQUIS touch S/P

5.2.2 Terminal assignment



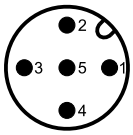

Function	Pin on M12 flange connector
not connected	1
+24 V voltage supply from transmitter/controller	2
GND	3
RS 485 B (RxD/TxD-)	4
RS 485 A (RxD/TxD+)	5

5 Electrical connection

5.3 Flow monitoring (combination fitting and flow monitor)

5.3.1 Terminal assignment

Switching contact = NPN N/O contact (illustration = minimum inflow not reached)

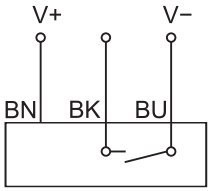

Function	Wire color
+12 V voltage supply from transmitter/controller (V+)	brown (bn)
Contact (NPN N/O contact)	black (bk)
GND (V-)	blue (bu)

5.4 Combination fitting temperature probe

5.4.1 Terminal assignment

Connection for M12 machine connector

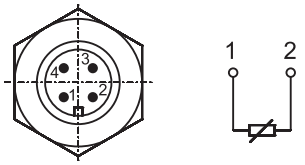

5.5 Example of a measuring section with the sensor type 202631/44

5.5.1 General information

The electronics integrated into the sensor shaft provide an uncalibrated signal of 4 to 20 mA. The signal can be processed by the JUMO AQUIS 500 AS, the JUMO dTRANS AS 02 or the JUMO AQUIS touch S/P. The devices provide the required voltage supply and allow for easy calibration of the measuring system. However, the sensor can also be connected to other indicators, controllers, recorders or PLC systems[1] as long as they supply the sensor with voltage and are able to be calibrated.

5.5.2 Connection example

NOTE!

Before connecting the sensor, you must read the operating manual for the JUMO AQUIS 500 AS.

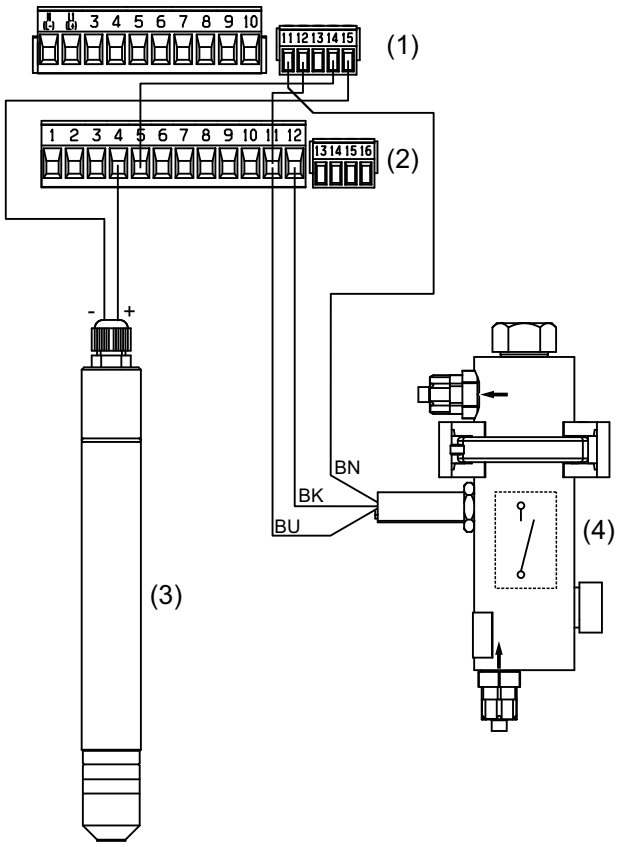

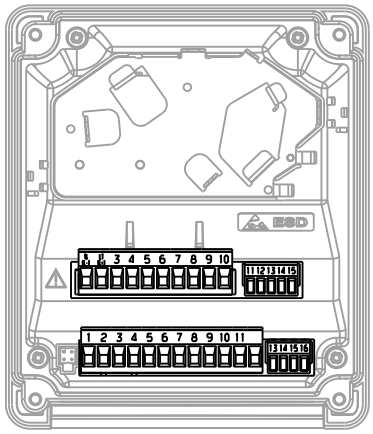

(1) Terminal block 1
(2) Terminal block 2
(3) Sensor for bromine, type 202631/44
(4) Flow monitor, type 202811/20
(5) JUMO AQUIS 500 AS, type 202568/... with open front cover, please also refer to data sheet and operating manual 202568

Flow monitoring

If the flow monitor (4) signals that the sensor (3) inflow is too low, the input to the JUMO AQUIS 500 AS (5) is switched to binary - the device transitions to "Hold" status and an alarm is output.

[1] Galvanic isolation required.

6 Startup

6.1 Important notes for screwing the membrane cap on and off

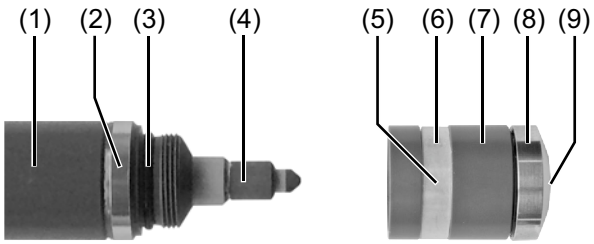

(1) Sensor shaft
(2) Counter electrode
(3) O-ring
(4) Electrode finger
(5) Valve opening
(6) Valve cover
(7) Membrane cap
(8) Membrane holder
(9) Membrane

WARNING!

Risk of chemical burns

When the membrane cap (7) is unscrewed, electrolyte can spray out of the valve opening (5) and cause skin irritation.

▶ Be sure to wear protective eyewear when starting up the sensor. Wash away any liquids which may spray out (aqueous solution of an alkali halide) with running water.

NOTICE

Touching the electrode finger may damage it

Touching and contaminating the electrode finger (4) can damage it, making the sensor unusable.

▶ Do not touch the electrode finger when carrying out any of the following steps. Carry out the steps exactly as they are described.

NOTICE

Damage to the membrane due to overpressure or underpressure

The membrane is extremely sensitive. Screwing the membrane cap (7) on and off can create overpressure or underpressure in the cap which can damage the membrane (9).

▶ Closely follow the instructions for filling the reference electrolyte (chapter 6.2 "Filling up the reference electrolyte", page 27).

NOTICE

Damage to the membrane due to mechanical influences

When the sensor is ready to take a measurement (membrane cap fully screwed on), the distance between the electrode finger (4) and the membrane (9) is extremely small. Pushing the tip against the sensor can damage the membrane.

▶ The membrane cap must only be screwed onto the sensor immediately before inserting it into a fitting.

NOTE!

In order for the sensor to function correctly, the membrane must be **fully** screwed onto the sensor. The first screw-in resistance is the sealing O-ring (3). The membrane cap must be screwed on further up to the stop.

6.2 Filling up the reference electrolyte

NOTE!

The service life of the reference electrolyte is around 1 year.

NOTE!

Gel electrolytes must not be shaken and must be stored upside down or standing on the end cap.

NOTE!

We recommend that you use warm water to rinse off any gel electrolyte residues on the electrode finger (1) and in the membrane cap (5).

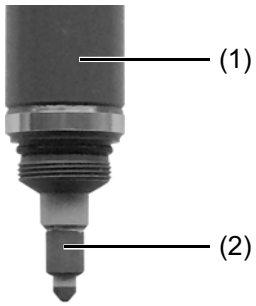

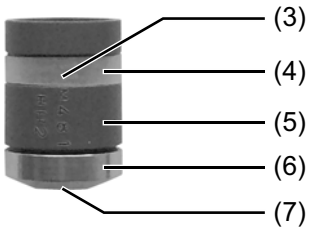

(1) Sensor shaft
(2) Electrode finger
(3) Valve opening
(4) Valve cover
(5) Membrane cap
(6) Membrane holder
(7) Membrane

1.	Remove the transparent protective cap from the membrane cap (5). Lift the transparent cover (4) of the valve opening (3) above the engraving near the valve opening with a small screwdriver or similar and push it down. *The valve opening is open.*	

NOTICE

Damage to the membrane due to overpressure or underpressure

The membrane is extremely sensitive. Screwing the membrane cap (5) on and off can create overpressure or underpressure in the cap which can damage the membrane.

▶ Follow the instructions for filling the reference electrolyte closely.

2.	Unscrew the membrane cap (5) from the sensor shaft (1)	
3.	Slide the transparent cover back again until the cover is back in the groove and the valve opening closes. *The valve opening is closed*	
4.	When refilling: discard the used electrolyte, clean the membrane cap with clean water and dry. Place the membrane cap on a clean, non-absorbant surface.	

5.	Fill the membrane cap up to the brim with **bubble-free** electrolyte (contained in the scope of delivery of the sensor).	
6.	Holding the sensor shaft vertically, slowly insert it into the filled membrane cap. Fit it onto the membrane cap, turning the shaft counterclockwise first if necessary so that the thread engages, then slowly screw the electrode shaft into the membrane cap in a clockwise direction. When holding the membrane cap, do not hold it by the valve (see arrow in the figure on the right). Any surplus electrolyte will leak out of the valve.	
7.	Ensure that the membrane cap is screwed on over the sealing O-ring and tightly against the sensor shaft. Rinse off any electrolyte on the exterior with water.	

6.3 Minimum inflow

NOTE!

The flow rate from the measurement medium must be at least **15 cm/s** in order for the sensor to work correctly. The minimum flow rate in the combination fitting or the flow fitting is **30 l/h**. Values measured by the sensors below the minimum inflow speed are too low. This can cause dangerous overdosage in a connected regulating system. If values are measured above the minimum inflow speed, the measurement signal is only marginally influenced by the inflow speed.

6.3.1 Adjusting the minimum inflow (combination fitting and flow monitor)

The flow in the fitting is regulated by turning the valve insert (4).

The minimum inflow is reached when the flow of the measurement medium lifts the floating body (3) enough for the top edge to reach the marking (1).

If the combination fitting is equipped with a flow monitor, the contact of the inductive proximity sensor (2) closes and sends a signal to the connected evaluation unit/controller indicating that the minimum inflow has been reached; please refer to "Flow monitoring (combination fitting and flow monitor) ", page 24.

The principle is illustrated by the graphic using the combination fitting as an example, but the same principle applies for separate flow monitors (when the sensor is used in the flow fitting).

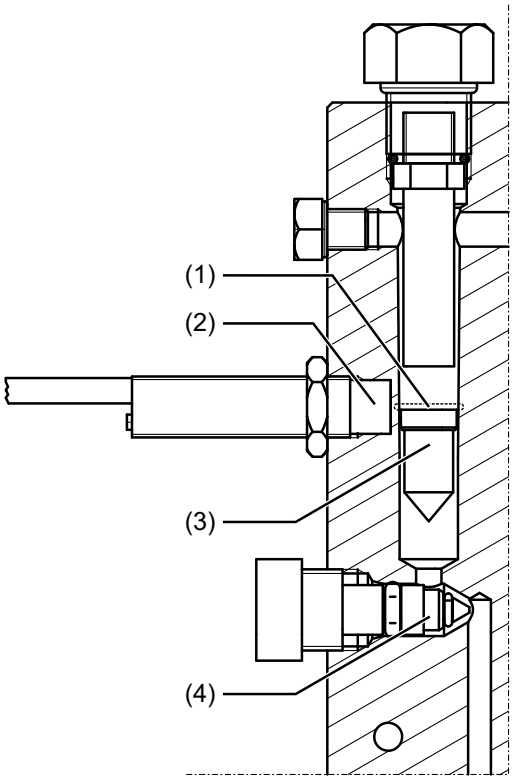

6.4 Settling time

NOTE!

The sensor will only measure a constant value at the end of a settling time; it can then be calibrated!

Settling time	
Type 202631/44	2 hours
Type 202631/52	

On the day after the initial startup, the calibration procedure should be repeated.

7 Maintenance

7.1 Cleaning the electrode finger tip/changing the electrolyte and the membrane cap

NOTICE

Potential damage to the sensor

Cleaning the electrode finger (2) incorrectly may damage the sensor.

- ▶ Do not sand down the brown deposit on the combined counter and reference electrode of the electrode finger.
- ▶ Do not touch or contaminate the electrode finger.
- ▶ Carry out the following steps exactly as they are described.

NOTICE

Potential damage to the membrane cap

Unscrewing the membrane holder (6) from the membrane cap (5) causes the membrane (7) to be misaligned, and may damage it.

- ▶ Do not unscrew the membrane holder from the membrane cap.

NOTE!

We recommend that you use warm water to rinse off any gel electrolyte residues on the electrode finger and in the membrane cap.

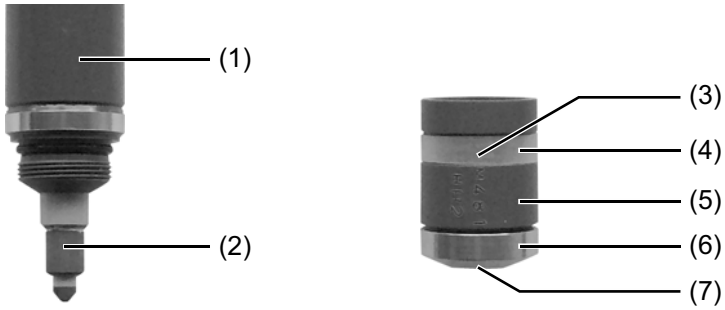

1.	Unscrew the membrane cap (5) from the sensor shaft; see chapter 6.1 "Important notes for screwing the membrane cap on and off", page 26.	
2.	Clean the electrode finger (2) and the membrane cap (5) with drinking water and dry, see chapter 6.2 "Filling up the reference electrolyte", page 27.	
3.	Use the special abrasive paper provided to clean **just the tip** of the dry electrode finger (2). Then place the special abrasive paper on a paper towel, hold it in place by one corner, and, while holding the sensor vertically, run the tip of the electrode over the abrasive paper two or three times.	
4.	Fill the membrane cap up to the brim with the electrolyte provided, ensuring that it is **free of air bubbles**; see chapter 6.1 "Important notes for screwing the membrane cap on and off", page 26.	
5.	Screw the membrane cap onto the sensor shaft; see chapter 6.1 "Important notes for screwing the membrane cap on and off", page 26.	

NOTE!

The service life of the electrolyte is around 1 year. The service life of the membrane is heavily dependent on the quality of the water. We recommend that you replace the membrane cap at least once a year.

NOTE!

Severe contamination of the membrane must be prevented!

NOTE!

If the connected transmitter is still showing a value that is too low after the tip of the electrode finger has been cleaned, a new membrane cap must be used.

7.2 Removing calcium deposits from the membrane cap

1. Unscrew the membrane cap from the sensor shaft; see chapter 6.1 "Important notes for screwing the membrane cap on and off", page 26.
2. Discard the electrolyte.
3. Place the membrane cap in 1% hydrochloric acid for a few hours.
4. Rinse thoroughly with distilled water or drinking water before startup.
5. When it is filled with electrolyte, screw the membrane cap onto the sensor shaft; see chapter 6.1 "Important notes for screwing the membrane cap on and off", page 26.

7.3 Storage

NOTE!

Membrane caps which have been in operation for longer than a day cannot be stored and used again.

Preparation

1. Unscrew the membrane cap from the sensor shaft; see chapter 6.1 "Important notes for screwing the membrane cap on and off", page 26.
2. Discard the electrolyte.
3. Rinse the membrane cap and electrode finger with distilled water or drinking water and dry them, ensuring they are free from dust.
4. Unscrew the dry membrane cap loosely from the sensor shaft. The membrane must not be positioned at the tip of the electrode finger.

The sensor is ready to be stored.

Restarting

1. Use the special abrasive paper provided to clean the tip of the electrode finger; refer to chapter 7.1 "Cleaning the electrode finger tip/changing the electrolyte and the membrane cap", page 30.
2. Fill the new membrane cap with electrolyte and screw it onto the sensor shaft; refer to chapter 6.2 "Filling up the reference electrolyte", page 27.

The sensor is ready for operation.

7 Maintenance

7.4 Consumable material

Spare part sets and electrolytes

Designation	Part no.
Spare parts set (1 x membrane cap, fine abrasive paper)	00687804
Spare parts set for seawater (1 x membrane cap, fine abrasive paper)	00687805
Special electrolyte for 202631 (100 ml)	00585104

8.1 General information

NOTE!

According to requirements, the sensor should be inspected or calibrated at regular fixed intervals.

Recommendation: weekly, or more frequently depending on the accuracy requirements.

8.2 Calibrating with an indicator/controller

Reference method

NOTE!

Calibration is performed at the transmitter/controller using analytical chlorine determination (photometer for chlorine), either with the combination of the methods DPD-1 + DPD-3 or with the DPD-4 method). Appropriate test systems are commercially available[1].

NOTE!

The calibration type **final value calibration** must thus be selected at the transmitter/controller. Zero point calibration is not required.

Initial situation

Display format and measuring range are set, refer to the operating manual for the indicator/controller used.

The sensor is installed in a suitable flow fitting (refer to chapter 4.3 "Flow fitting for membrane-covered sensors (type 202811/30)", page 19) or combination fitting (refer to chapter 4.2 "Combination fitting (type 202811/10)", page 16).

The settling time for the sensor (**2 hours**) has elapsed and the measured value is stable.

Procedure

1. Take a water sample from the outlet of the fitting (or from the immediate vicinity).
2. Immediately determine the analyte concentration (total chlorine) of the sample using a suitable reference method.
3. Calibrate the indicator on the basis of the reference value; refer to the operating manual for the transmitter/controller used.

Checking the determined slope

Many transmitters/controllers (e.g. the JUMO AQUIS 500 AS) have a "calibration logbook". This logbook is used to record the relevant data during every calibration.

NOTE!

If the value for the nominal slope is **under 30%**, the membrane cap and the electrolyte must be replaced and the electrode tip must be cleaned; see chapter 7.1 "Cleaning the electrode finger tip/changing the electrolyte and the membrane cap", page 30.

Setting the slope manually

Refer to the operating manual for the transmitter/controller used.

[1] Examples include: "Spectroquant®" (by Merck), "Nanocolor®" (by Macherey-Nagel), etc.

8 Calibration

Zero point adjustment

A zero point adjustment is **not** required for the sensors described in this operating manual. The zero point is **not dependent** on changes in the flow, conductivity, temperature, or the pH value.

9.1 General troubleshooting

9.1.1 Fault symptom: Sensor cannot be calibrated/measured value deviates from DPD measurement

Possible cause of error	Troubleshooting
Gas bubbles in electrolyte	1. Unscrew the membrane cap. 2. Repeat the startup (see page 26).
The settling time is too short.	1. Wait for at least two hours. 2. Repeat calibration (see page 33).
The membrane is torn.	Replace the membrane cap (see page 30).
The membrane cap is damaged.	Replace the membrane cap (see page 30).
Foreign content in water	1. Check the water for foreign content (see page 40 "Disturbances"). 2. Provide a remedy. 3. Contact the supplier.
Short-circuit/defect in the measuring cable.	Trace and remedy the short-circuit/defect.
	Replace the measuring cable.
The distance between the membrane and the electrode is too large.	Screw the membrane cap fully on, up to the stop.
The DPD chemicals are too old.	1. Use new DPD chemicals. 2. Repeat calibration (see page 33).
Deposits on the membrane	Replace the membrane cap (see page 30).
Gas bubbles on the outside of the membrane	Briefly increase the flow rate.
	Check and change the installation.
No electrolyte in the membrane cap	Fill the membrane cap with electrolyte (see page 27).
The disinfectant concentration exceeds the upper measuring range limit.	1. Check the system. 2. Eliminate the fault. 3. Repeat calibration (see page 33).
Lack of galvanic isolation (only for types with output signal 4 to 20 mA)	1. Ensure galvanic isolation. 2. Send the sensor to the supplier for inspection/reconditioning if the problem is not resolved by ensuring galvanic isolation.
The sensor is defective.	Send the sensor to the manufacturer for inspection/reconditioning.

9.1.2 Fault symptom: Measured value is unstable

Possible cause of error	Troubleshooting
Gas bubbles in electrolyte	1. Unscrew the membrane cap. 2. Repeat the startup (see page 26).
The settling time is too short.	1. Wait for at least two hours. 2. Repeat calibration (see page 33).
The membrane is torn.	Replace the membrane cap (see page 30).
The membrane cap is damaged.	Replace the membrane cap (see page 30).

Possible cause of error	Troubleshooting
Gas bubbles in electrolyte	1. Unscrew the membrane cap. 2. Repeat the startup (see page 26).
The membrane is torn.	Replace the membrane cap (see page 30).
Gas bubbles on the outside of the membrane	1. Briefly increase the flow rate. 2. Check and change the installation.
Pressure fluctuations in the measurement water	Check and change the installation type.
Lack of galvanic isolation	1. Ensure galvanic isolation. 2. Send the sensor to the supplier for inspection/reconditioning if the problem is not resolved by ensuring galvanic isolation.
The reference electrode is exhausted and/or soiled[a].	Send the sensor to the manufacturer for inspection/reconditioning.

[a] If the reference electrode is exhausted it will shine with a silver or white color. A brown/gray color is normal.

9.1.3 Fault symptom: Overload

An overload situation exists if the sensor electronics receive too high a signal from the electrochemical sensor cell. See also the table on page 37.

Possible cause of error	Troubleshooting
The disinfectant concentration in the measurement water is too high.	1. Check the system. 2. Eliminate the fault. 3. Calibrate the sensor (see page 33). 4. Maintain the sensor (see page 30) if the fault persists after calibrating the sensor.
The settling time is too short.	Wait for the settling time to expire (approx. 2 hours).
The membrane is damaged.	Replace the membrane cap (see page 30).
The inflow is too high.	Check the system.
	Reduce the flow.
Lack of galvanic isolation	1. Ensure galvanic isolation. 2. Send the sensor to the supplier for inspection/reconditioning if the problem is not resolved by ensuring galvanic isolation.
The sensor is defective.	Send the sensor to the manufacturer for inspection/reconditioning.

9.1.4 Fault symptom: Undermodulation

Undermodulation exists if the sensor electronics receive a signal with the wrong polarity (below the zero point) from the electrochemical sensor cell. See also the table on page 37.

Possible cause of error	Troubleshooting
The settling time is too short.	Wait for the settling time to expire (approx. 2 hours).
The cathode is soiled.	Maintain the sensor (see page 30).

Possible cause of error	Troubleshooting
Lack of galvanic isolation (only for types with output signal 4 to 20 mA)	1. Ensure galvanic isolation. 2. Send the sensor to the supplier for inspection/reconditioning if the problem is not resolved by ensuring galvanic isolation.
The sensor is defective.	Send the sensor to the manufacturer for inspection/reconditioning.

9.1.5 Fault symptom: Green LED does not light up or flickers

Only applies to sensor type 202631/52 (digital interface output signal).

Possible cause of error	Troubleshooting
Faulty voltage supply.	Ensure the correct voltage supply (see details of voltage supply in chapter 10 "Technical data", page 40).
The sensor is defective.	Send the sensor to the manufacturer for inspection/reconditioning.

9.1.6 Fault symptom: Sensor fails to return an output signal

Possible cause of error	Troubleshooting
The sensor has been connected to the transmitter/controller with the wrong polarity[a].	Connect the sensor to the transmitter/controller with the correct polarity.
The connecting cable is interrupted.	Replace the connecting cable.
The sensor is not receiving a voltage supply.	Ensure the correct voltage supply (see details of voltage supply in chapter 10 "Technical data", page 40).
The sensor is defective.	Send the sensor to the manufacturer for inspection/reconditioning.

[a] Only applies to sensor type 202631/44 (output signal 4 to 20 mA).

9.1.7 Output signal of the sensor in case of undermodulation/overload

Sensor output signal	Undermodulation	Overload
4 to 20 mA analog	< 4 mA	> 20 mA
Modbus digital	< 0 ppm	Measured value > measuring range

9 Overcoming errors and malfunctions

9.2 Specific troubleshooting on the sensor

If the electrode finger has a bright silvery or white appearance, the sensor must be reconditioned by the manufacturer. Brown-gray colors are normal.

9.2.1 Testing the leak-tightness of the membrane cap

1. Carefully dry the outside of the membrane cap to be checked.
2. Prepare the membrane cap for mounting in accordance with chapter 6.2 "Filling up the reference electrolyte", page 27 and fill it with electrolyte.
3. If necessary, dry the outside of the membrane cap again.
4. Slowly and carefully screw the membrane cap onto the sensor shaft in accordance with chapter 6.1 "Important notes for screwing the membrane cap on and off", page 26.
5. When screwing the membrane cap on, check if the gel leaks through the membrane.



NOTE!

You must check carefully to determine that liquid does not leak through the membrane but that it escapes at the outlets designed for this purpose; repeat the leakage test if necessary.

– If droplets form on the membrane, the membrane is faulty and you must use a new membrane cap. The formation of a small meniscus is acceptable as the membrane has hydrophilic properties.
– If the membrane cap is leaking, you must check if the reference electrode was damaged when the measuring water and electrolyte were replaced. If the electrode finger has a bright silvery or white appearance, the measuring cell must be sent to the manufacturer for inspection.

9.2.2 Electronics test

Type 202631/44 (output signal 4 to 20 mA)

1. Unscrew the membrane cap; refer to chapter 6.1 "Important notes for screwing the membrane cap on and off", page 26.
2. Carefully rinse the electrode finger and dry it carefully with a clean cloth.
3. Connect the sensor to the indicator/controller and wait for approx. 5 minutes.
4. Read the original signal from the measuring cells on the measuring device/controller or measure it with a digital multimeter.

   The measured value should be approx. 4 mA.

– If the sensor signal roughly corresponds to this value, the electronics are likely to be working correctly.
– If the measured value is significantly different from the value stated above, the sensor must be sent to the manufacturer for inspection.

9.2.3 Testing the zero point



NOTE!

The zero point should be tested after the electronics have been tested.

1. Prepare the sensor for startup; refer to chapter 6 "Startup", page 26.
2. Connect the sensor to the indicator/controller.
3. Carefully place the sensor in a beaker with clean tap water (free of disinfectant).
4. Move the sensor around in the beaker for approx. 30 s (without creating air bubbles).
5. Leave the sensor in the beaker for >1 h and wait for the settling time to elapse.

6. Read the original signal on the measuring device/controller or measure it with a digital multimeter.
7. The sensor signal should be around the zero point.

– If the sensor signal tends towards zero, the zero point is very likely to be okay.
– If the measured value deviates significantly from zero, maintenance must be carried out on the sensor (refer to chapter 7 "Maintenance", page 30) and the "zero point test" must be repeated. Note that a recently cleaned cathode has a relatively high zero point. In this case, the sensor will take a few days to reach its lowest zero point.
– If the measured value does not tend towards zero, even after maintenance has been carried out, the sensor must be sent to the manufacturer for inspection.

NOTE!

In general, the zero points of sensors with an extremely small measuring range, or which are more sensitive, are slightly higher than for measuring cells with large measuring ranges or which are less sensitive.

9.2.4 Measurement signal test

NOTE!

The signal should be tested after the zero point has been tested.

1. Add a little disinfectant to the water in the beaker (which was used in the section "Testing the zero point"; refer to chapter 9.2.3 "Testing the zero point", page 38).
2. With the sensor connected to the measuring device, move it around as evenly as possible in the beaker for at least five minutes.
3. Check to see if the measuring signal increases in this time.

– If the sensor signal increases, the sensor is likely to be working correctly. If the sensor does not react to the disinfectant, carry out maintenance on the sensor (refer to chapter 7 "Maintenance", page 30) before repeating the "signal test".
– If the sensor still does not react to the disinfectant after these steps have been carried out, it must be sent to the manufacturer for inspection.

9.2.5 Testing the environment

If the cause of the error cannot be clearly identified after carrying out the tests mentioned above, the following points in the area around the measuring chain must be tested:

- Flow
- Indicating device / controller
- Dosing device
- Correct calibration
- Pressure in the flow fitting
- Concentration of the disinfectant in the measured water (analysis)
- Measuring cable
- pH value of the measured water
- Temperature of the measured water
- Analysis
- Suitability of the sensor for measuring the dosed disinfectant
- Concentration of the disinfectant in the dosing tank

10 Technical data

Sensor type	202631/44 (output signal 4 to 20 mA)	202631/52 (digital interface output signal)
Measurand	**Total chlorine**	
Area of application	Disinfection of drinking water, swimming pool water, service water, process water, and seawater	
Suitable chlorination agents	Inorganic chlorine compounds: NaOCl (sodium hypochlorite), $Ca(OCl)_2$, chlorine gas, chlorine produced by electrolysis	
Measuring principle	Membrane-covered, amperometric, potentiostatic three-electrode system with integrated electronics	
Measuring cable connection	2-pole terminal connection (2 × 1 mm^2)	5-pole flange connector, M12
Voltage supply	U_B DC 12 to 30 V (galvanic isolation required)	U_B DC 22.5 to 26 V (galvanically isolated from the sensor)
Electromagnetic compatibility[a]	Interference emission: class B[b] Interference immunity: to industrial requirements	
Output signal	4 to 20 mA	Modbus RTU
Burden/current consumption	≤ (U_B - 7.5 V) ÷ 0.02 A	20 mA
Settling time	Approx. 2 h for initial startup	
Inflow speed	Approx. 15 cm/s corresponds to a flow of approx. 30 l/h when installed in the JUMO flow fitting (part no.: 00392611))	
Measuring ranges[c]	0.05 to 0.5 mg/l (ppm) 0.05 to 2 mg/l (ppm) 0,05 bis 5 mg/l (ppm) 0.05 to 10 mg/l (ppm) 0.05 to 20 mg/l (ppm)	0.05 to 2 mg/l (ppm) 0.05 to 20 mg/l (ppm)
Resolution	0.01 mg/l	0.001 mg/l with measuring range 2 mg/l 0.01 mg/l with measuring range 20 mg/l
Accuracy[d]		
Measuring range 2 mg/l	< 2 % with 0.4 mg/l and with 1.6 mg/l	
Measuring range 20 mg/l	< 1 % with 4 mg/l; < 3 % with 16 mg/l	
Slope drift[e]	Approx. < -1 % per month	
Response time $_{t90}$	Approx. 2 minutes	
Operating temperature		
Measurement water	0 to 45 °C[f]	
Environment	0 to 55 °C	
Temperature compensation	Automatic, using integrated temperature probe	
Zero point adjustment	Not required	
Slope adjustment	On evaluation unit/controller using analytical chlorine determination, DPD-4 method (DPD-1 + DPD-3)	
pH value area of application	pH 4 to pH 12, extremely reduced pH dependence (⇨"sensor slope depending on the pH value ", page 41)	
Disturbances	ClO_2: Factor 1 O_3: Factor 1.3 Corrosion inhibitors can lead to measuring errors Water hardness stabilizers can lead to measuring errors	
Absence of the disinfectant	Max. 24 h	

Sensor type	202631/44 (output signal 4 to 20 mA)	202631/52 (digital interface output signal)
Pressure resistance[g]	p_{abs} max. 4 bar p_{rel} max. 3 bar	
Materials	Microporous, hydrophilic membrane, PVC-U, PEEK, stainless steel 1.4571	
Dimensions	Dia. 25 mm, length 220 mm	Dia. 25 mm, length 205 mm
Weight	Approx. 125 g	

[a] EN 61326-1, EN 61326-2-3
[b] The product is suitable for industrial use as well as for households and small businesses.
[c] Other measuring ranges upon request.
[d] After calibration under replicable conditions (25 °C, pH 7.2 in drinking water).
[e] Under replicable conditions (25 °C, pH 7.2 in drinking water).
[f] Prerequisite: no ice crystals in the measurement medium.
[g] No pressure fluctuations admissible. Pressure-free operation (atmospheric pressure) recommended.

10.1 Maintenance, storage, and transport

Maintenance	
Inspection of the measuring signal	Regularly, at least once a week
Replacement of the membrane cap	Once a year (depending on the quality of the water)
Replacement of the electrolyte	Once a year
Storage	
Sensor	Can be stored indefinitely in a frost-free and dry place, without electrolyte and between +5 and 40 °C
Membrane cap	Used membrane caps cannot be stored!
Electrolyte	In original bottle, away from sunlight, and at a temperature between +5 and 35 °C
Transport	+5 to 50 °C (sensor, electrolyte, membrane cap)

10.2 sensor slope depending on the pH value

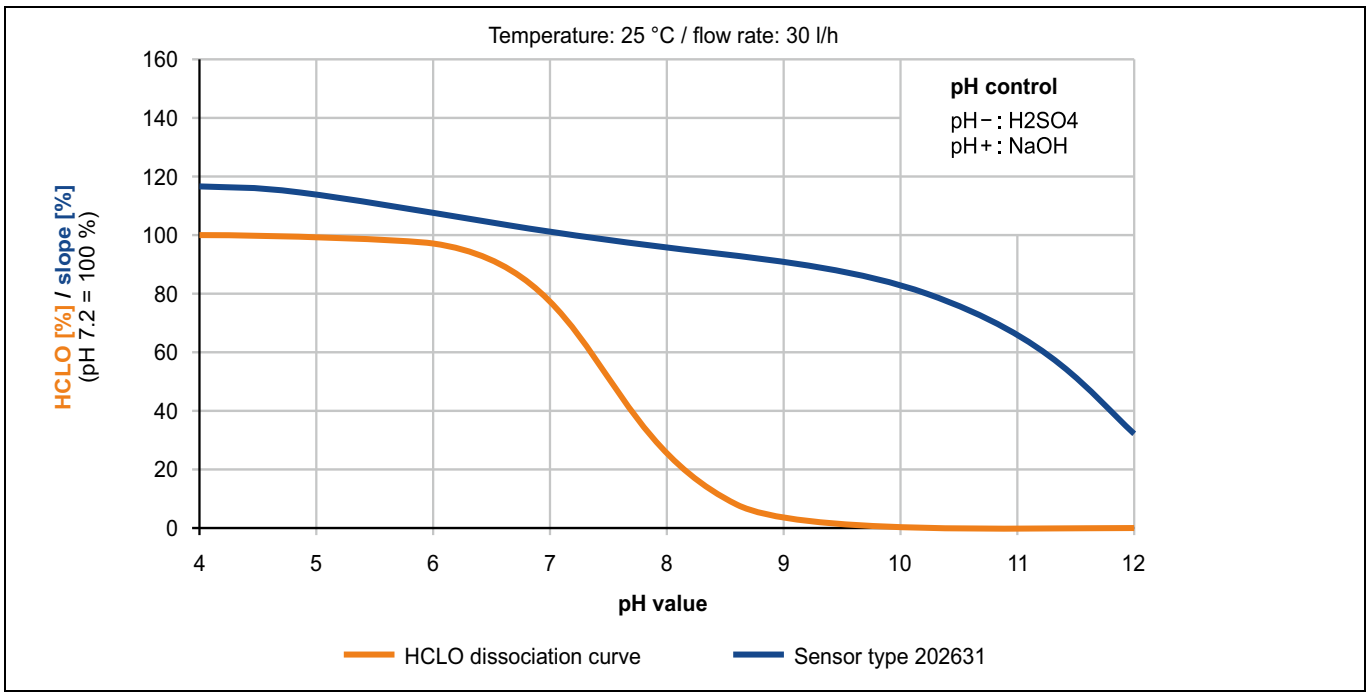

部件名称 Product group: 202630/31/34/36	有毒有害物质或元素 Hazardous substances					
	铅（Pb）	汞（Hg）	镉（Cd）	六价铬（Cr(VI)）	多溴联苯（PBB）	多溴二苯醚（PBDE）
外壳 Housing (Gehäuse)	○	○	○	○	○	○
过程连接 Process connection (Prozessanschluss)	○	○	○	○	○	○
-螺母 Nut (Mutter)	○	○	○	○	○	○
螺钉 Screw (Schraube)	○	○	○	○	○	○

本表格依据 SJ/T 11364-2014**的规定编制。**

(This table is prepared in accordance with the provisions of SJ/T 11364-2014.)

O：**表示**该有害物质在该部件所有均质材料中的含量均在 GB/T 26572 规定的限量要求以下。

(O: Indicates that said hazardous substance contained in all of the homogeneous materials for this part is below the limit requirement of GB/T 26572.)

X：**表示**该有害物质至少在该部件的某一均质材料中的含量超出 GB/T 26572 规定的限量要求。

(X: Indicates that said hazardous substance contained in one of the homogeneous materials used for this part is above the limit requirement of GB/T 26572.)

JUMO GmbH & Co. KG
Street address:
Moritz-Juchheim-Straße 1
36039 Fulda, Germany
Delivery address:
Mackenrodtstraße 14
36039 Fulda, Germany
Postal address:
36035 Fulda, Germany
Phone: +49 661 6003-0
Fax: +49 661 6003-607
Email: mail@jumo.net
Internet: www.jumo.net

JUMO Instrument Co. Ltd.
JUMO House
Temple Bank, Riverway
Harlow, Essex, CM20 2DY, UK
Phone: +44 1279 63 55 33
Fax: +44 1279 62 50 29
Email: sales@jumo.co.uk
Internet: www.jumo.co.uk

JUMO Process Control, Inc.
6733 Myers Road
East Syracuse, NY 13057, USA
Phone: +1 315 437 5866
Fax: +1 315 437 5860
Email: info.us@jumo.net
Internet: www.jumousa.com