JUMO digiLine O-DO S10

Intelligent sensor for dissolved oxygen with digital interface and analog output



Operating Manual

20261400T90Z001K000

V4.00/EN/00753657/2024-04-12

Table of contents

1 Introduction 5

1.1 Safety information 5
1.1.1 General Information 5
1.1.2 Warning symbols 5
1.1.3 Note symbols 5
1.2 Intended use 5
1.2.1 Typical areas of application 6
1.3 Other applicable device documentation 6
1.4 Qualification of personnel 6
1.5 Acceptance of goods, storage, and transport 6
1.5.1 Checking the delivery 6
1.5.2 Important information about storage and transport 7
1.5.3 Returning goods 7
1.5.4 Disposal 7
1.6 Features 8
1.7 Structure 9
1.8 Function principle 9
1.9 Factors influencing oxygen measurement 10
1.9.1 Temperature 10
1.9.2 Air pressure 10
1.9.3 Salinity 10
1.9.4 Compensation variables (influencing factors) depending on the oxygen measuring unit 11

2 Identifying the device version 12

2.1 Nameplate 12
2.2 Order details 13
2.3 Scope of delivery 13
2.4 Accessories 14

3 Mounting 18

3.1 Mounting site and environmental conditions 18
3.2 Sensor fittings 19
3.2.1 Suspended fitting 19
3.2.2 Immersion fitting 22
3.2.3 Flow fitting 25
3.3 Insertion in fittings 26
3.3.1 Installation of the sensor in the suspended or immersion fitting 26
3.3.2 Insertion of the sensor into the PVC flow fitting 29
3.3.3 Installation of the sensor in an on-site immersion fitting 30
3.4 Removal from the sensor holder 31
3.5 Setup of a measuring point with support pillar 32
3.6 Sensor dimensions 34

Table of contents

4 Electrical connection 35

4.1 Fixed cable with M12 plug, A-coded 35
4.2 Connection to transmitters/controllers 35
4.3 Connection examples 36

5 Startup 40

5.1 Initial startup 40
5.2 Calibration interval 41
5.3 Calibration 41
5.3.1 End value calibration 42
5.3.2 Zero point calibration 43
5.3.3 Calibration logbook 44

6 Maintenance 45

6.1 Removal of the sensor 45
6.2 Cleaning the sensor 45
6.3 Replacing the sensor cap 46
6.4 Functions for self-diagnostics 47

7 Technical data 48

7.1 Specifications 48
7.2 Interfaces 49
7.3 Electrical data 49
7.4 Case 50
7.5 Display units / controller 50

8 Certificates 51

8.1 Declaration of conformity 51
8.2 China RoHS 54

1.1 Safety information

1.1.1 General Information

This manual contains information that must be observed in the interest of your own safety and to avoid material damage. This information is supported by symbols which are used in this manual as indicated.

You will only achieve maximum accuracy and maximum operating life if you follow our instructions exactly.

Please read this manual before starting up the device. Store this manual in a place that is accessible to all users at all times.

If difficulties occur during startup, please do not intervene in any way that could jeopardize your warranty rights!

JUMO GmbH & Co. KG accepts no liability for damage and malfunctions resulting from non-observance of the operating manual!

1.1.2 Warning symbols



CAUTION!

This symbol in connection with the signal word indicates that **material damage or data loss** will occur if the respective precautionary measures are not taken.

1.1.3 Note symbols



NOTE!

This symbol refers to **important information** about the product, its handling, or additional benefits.



REFERENCE!

This symbol refers to **additional information** in other sections, chapters, or other manuals.



DISPOSAL!

At the end of its service life, the device and any batteries present do not belong in the trash! Please ensure that they are **disposed of** properly and in an **environmentally friendly** manner.

1.2 Intended use

The JUMO digiLine O-DO S10 has been developed for measuring the partial pressure of dissolved oxygen and the measurands derived from it:

- Percent oxygen air saturation, % Sat.
- Oxygen by volume, % vol.
- Oxygen concentration in liquids, ppm (mg/l)

NOTICE!

Risk of damage if the sensor is not used as intended

A damaged sensor can cause damage and/or incorrect dosing in the application by providing incorrect measurement results.

▶ Only use the JUMO digiLine O-DO S10 for its intended purpose and only use it if it is in a safe condition.

▶ The limits for temperature and pressure defined in the chapter chapter 7 "Technical data", Page 48 must not be exceeded under any circumstances.

▶ Installation and maintenance of the sensor may only be carried out by qualified personnel.

1.2.1 Typical areas of application

- Drinking water monitoring
- Protection of water bodies
- Fish breeding (fresh and salt water)
- Municipal and industrial sewage treatment plants
- General water and wastewater engineering
- Universities and teaching institutions

1.3 Other applicable device documentation

Document	Purpose and content of the document
Data sheet 202614 JUMO digiLine O-DO S10	The document provides all technical data related to the device and an overview of all accessories that can be ordered for the device.
Modbus interface description 202614 JUMO digiLine O-DO S10	The document describes the Modbus protocol, the configuration of the interface and contains the Modbus address tables.

NOTE!

The document types listed are available online on our homepage **www.jumo.de**. Here simply enter the product group "202614" into the search function.

1.4 Qualification of personnel

The personnel deployed must meet the following requirements in all phases of the product lifecycle:

- Trained electrical, mechanical, and plant engineering personnel.
- Members of personnel are familiar with this documentation and the safety information and warnings it contains.

1.5 Acceptance of goods, storage, and transport

1.5.1 Checking the delivery

- Ensure that the packaging and contents are not damaged
- Check the scope of delivery for completeness against the delivery documents and order details
- Inform the supplier immediately if there is any damage
- Keep damaged parts for clarification with the supplier

1.5.2 Important information about storage and transport

- Store the device in a dry, clean environment
- Observe the admissible environmental influences (⇨chapter 7.1 "Specifications", Page 48)
- Protect the device from shock during transport
- The original packaging provides optimum protection for storage and transport

1.5.3 Returning goods

- If repairs are needed, return the device in clean condition and in its entirety
- Please use the original packaging when returning the device

Please enclose the **fully completed cover letter for product returns** with the return shipment, including information on contamination protection.

You can download the cover letter via the following link:

⇨ http://produktruecksendung.jumo.info

Please do not forget the following information:

- Description of the application and
- Description of the error that has occurred

1.5.4 Disposal

Disposing of the device



Devices and/or replaced parts should not be placed in the refuse bin at the end of their service life as they consist of materials that can be recycled by specialist recycling plants.

Dispose of the device and the packaging material in a responsible and environmentally friendly manner.

For this purpose, observe the country-specific laws and regulations for waste treatment and disposal.

Disposing of the packaging material

The entire packaging material (cardboard packaging, inserts, plastic film, and plastic bags) is fully recyclable.

Observe the country-specific laws and regulations for waste treatment and disposal.

1 Introduction

1.6 Features

The JUMO digiLine O-DO S10 is an intelligent sensor for measuring dissolved oxygen. The oxygen measurement takes place in accordance with the optical measuring principle of luminescence quenching according to ASTM D888-05. This results in the following benefits for the user:

- No replacement of electrolytes
- No polarization voltage required
- No minimum inflow
- Greater calibration intervals due to low drift behavior
- Reliable measurement with long-term stability

The measured value for dissolved oxygen is automatically compensated to account for the temperature influence. In addition, the measured value can be compensated by the oxygen sensor with regard to the determining factors air pressure and salinity (if necessary using external sensors).

The JUMO digiLine O-DO S10 has 2 interfaces that can be used to transfer the measured value from the sensor to the measuring device/automation device. Communication takes place using a digital interface via RS485 Modbus RTU protocol or as an analog signal via the two-wire current interface (4 to 20 mA).

Configuration, parametrization, and calibration data is stored in the electronic components in the sensor of the JUMO digiLine O-DO S10. Sensor-specific specifications and measuring point information can also be stored and called up. In addition, a log book with the last 10 successful calibrations is available; this provides the user with an overview of the previous calibration history.
Furthermore, the sensor is equipped with the capability for self-diagnostics, in order to determine possible malfunctions. The information is output as a warning or error message.

The sensor is streamlined and has a robust construction. The sensor cap is easy to replace if it becomes worn. The sensor body of the JUMO digiLine O-DO S10 consists of PVC material, which allows it to be used in fresh water and salt water. A fixed cable with a 5-pole M12 connector is mounted on the sensor. The electrical connection to a measuring or automation device is quick and easy to establish.

2 connection options are available for mounting in a fitting – the Rp 1 thread on the sensor shaft or a mounting set G 1 available as accessories.

All wetted materials are suitable for fresh and salt water.

1.7 Structure

The basic design of the sensor is as shown below:

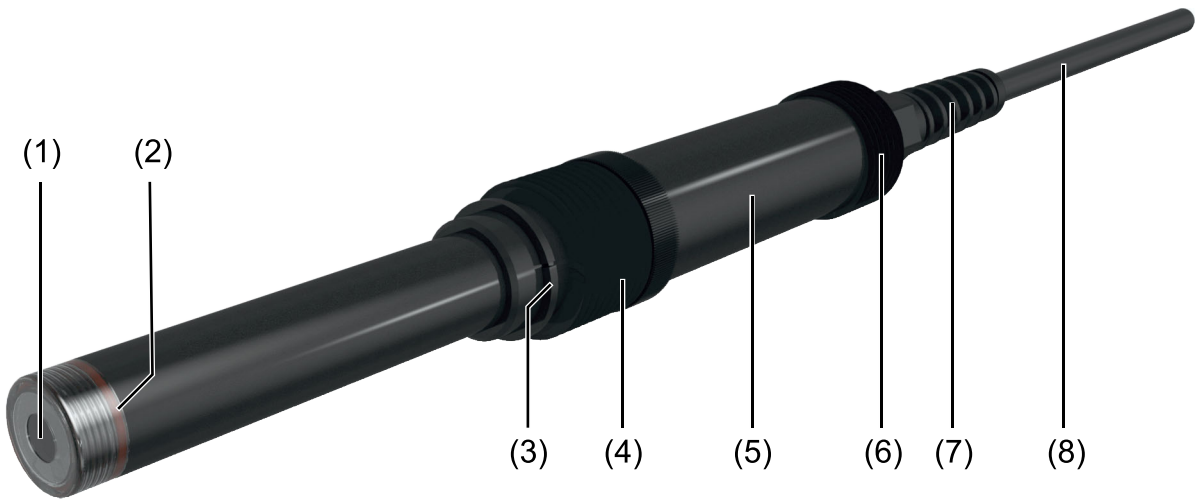

(1)	Removable sensor cap with luminophore	(2)	Sensor cap seal
(3)	Snap ring (accessories)	(4)	Union nut with thread G 1" (accessories)
(5)	Sensor body with digiLine optoelectronics	(6)	Sensor thread Rp 1"
(7)	Cable passage	(8)	Fixed connecting cable

1.8 Function principle

A coloring agent (luminophore) is applied to the oxygen-permeable sensor cap. A blue LED located in the sensor body irradiates the luminophore. By absorbing energy, it changes from its basic state to an excited state. Following a time delay, it returns to its basic state as it loses heat and emits the remaining energy as red light (referred to as florescent radiation), which is detected by a photo diode in the sensor body.

If the luminophore comes into contact with an oxygen module in the excited state, the energy transmission occurs directly onto the oxygen module without emission of the red light. The intensity of the florescent radiation reduces as the oxygen concentration increases. The operating life of the florescent radiation also reduces as the oxygen concentration increases. The measuring electronics modulate the exciter radiation. The oxygen concentration can be calculated precisely from the phase difference between the exciter and florescence radiation.

The measurement electronics of the sensor supply both the compensated oxygen concentration as well as the temperature value for the measurement medium, measured inside the sensor, to the connected measuring or automation device via the digital interface.

1 Introduction

1.9 Factors influencing oxygen measurement

The measurement of oxygen is influenced by the following factors:

- Temperature of the measurement medium.
- Salinity of the measurement medium.
- Air pressure.

For the measurement of the oxygen concentration (mg/l) in water, knowledge of the medium temperature is required. If the result in % saturation is desired, the current air pressure is also required.

1.9.1 Temperature

The dissolved oxygen content in water is heavily dependent on temperature. The higher the temperature of the measurement medium, the lower the solubility of oxygen and vice versa.

The JUMO digiLine O-DO S10 takes this physical dependence of oxygen measurement on temperature into account and outputs a measurement signal that is already temperature-compensated.

The temperature required for compensation can be provided by the temperature probe integrated in the sensor, or it can also be transferred externally from the JUMO digiLine or Modbus master device. Another option is to enter a fixed temperature value while configuring the JUMO digiLine sensor.

1.9.2 Air pressure

Dissolved oxygen in water is determined by partial pressure measurement. The amount of oxygen dissolved in the water also depends on the pressure of the atmosphere above the water surface. At high air pressure, more oxygen is dissolved in the water than at low air pressure.

The air pressure (hPa) is included in the calculation of the oxygen saturation (% sat.) and must therefore also be taken into account when calibrating the sensor (⇨Chapter Calibration).

To measure oxygen saturation in water, the air pressure (hPa) must be entered manually as a fixed pressure value while configuring the JUMO digiLine sensor. Alternatively, the air pressure can also be transferred externally from the JUMO digiLine or Modbus master device.

1.9.3 Salinity

Salinity, in simple terms, is the salt content of the water. Salts dissolved in water generally lead to a reduction in the solubility of oxygen. Therefore, to determine the oxygen concentration (mg/l) in the saline measurement medium, the salinity needs to be compensated. The calculation is based on the temperature-compensated electrolytic conductivity (unit mS/cm).

Salt compensation can be carried out either by entering a fixed temperature-compensated conductivity value while configuring the JUMO digiLine sensor, or it can be transferred externally from the JUMO digiLine master device.

1.9.4 Compensation variables (influencing factors) depending on the oxygen measuring unit

		Compensation variables		
		Temperature[a]	Air pressure[b]	Salinity
Oxygen measuring unit	hPa (mbar)	+	-	-
	ppm	+	-	+
	% sat.	+	+	-
	% vol.	+	+	-

[a] The sensor measures the temperature and automatically outputs the temperature-compensated measured value for oxygen.

[b] The value of this compensation variable must be transferred to the sensor by the connected transmitter/controller or during configuration via the DSM.

2 Identifying the device version

2.1 Nameplate

Position

The nameplate is glued to the sensor housing.



Table of contents

The nameplate shows important information. This includes:

Description	Designation on the nameplate	Example
Device type		202614/10-37-21-10/000
Fabrication number	F no.	12345678 01 0 **2113** 0123
Part no.	P/N	00727210

Device type

Compare the specifications on the nameplate with your order documents. You can identify the supplied device version using the order details (order code) on the following page.

Fabrication number (F no.)

Among other things, the fabrication number indicates the production date (year/week) and the hardware version number.

Part no. (P/N)

The part no. uniquely identifies an article in the catalog. It is important for communication between the customer and the sales department.

Production date

Example: F no. = 12345678 01 0 **2113** 0123

Here, we are looking at the **12th to 15th** digits (from the left).
The device was produced in the **13th** week of 20**21**.

2.2 Order details

	(1)	**Basic type**
202614		JUMO digiLine O-DO S10
	(2)	**Basic type extension**
10		Standard design
	(3)	**Measuring range**
37		0 to 20 ppm (mg/l)[a]
	(4)	**Electrical connection**
21		Fixed cable with M12 connector
	(5)	**Length of permanent cable**
10		10 m
30		30 m
	(6)	**Extra codes**
000		None

[a] Factory setting = 0 to 200 % Sat. To provide 0 to 20 ppm (mg/l) output, this setting must be changed in the sensor configuration.

	(1)		**(2)**		**(3)**		**(4)**		**(5)**		**(6)**
Order code		/		-		-		-		/	
Order example	202614	/	10	-	37	-	21	-	10	/	000

2.3 Scope of delivery

Sensor in the ordered version
Operating manual
Calibration certificate

2 Identifying the device version

2.4 Accessories

((Delivery within 10 working days after receipt of order)

General sensor accessories

Designation	Figure	Part no.
Replacement sensor cap		00727215
Bite protection, EPDM		00746848
Mounting set (union nut with thread G 1 + 2 circlips) Included in the scope of delivery of the fittings (suspended fitting, immersion fitting, flow fitting) for type 202614.		00730253
Pipe-mounted kit digiLine hub	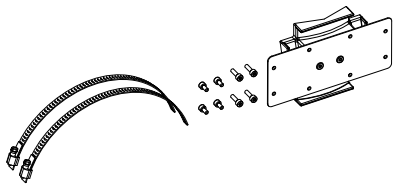	00648759
Mounting adapter set (angle 45 ° Ø 40 DN 32, PVC + reduction nipple on thread Rp1, PVC)		00747563

Connecting cables

Designation	Figure	Part no.
JUMO M12 digiLine master connecting cable for 705001, 5-pole, A-coded, length 10 m	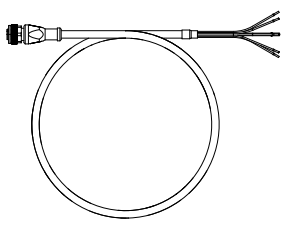	00665547
JUMO M12 digiLine master connecting cable for 705001, 5-pole, A-coded, length 5 m		00665539
JUMO M12 digiLine master connecting cable for 705001, 5-pole, A-coded, length 1.5 m		00665529

Designation	Figure	Part no.
JUMO M12 digiLine master connecting cable, 5-pole, A-coded, length 10 m (PG 203590)	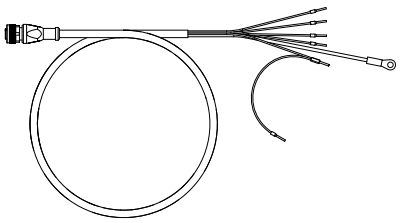	00638341
JUMO M12 digiLine master connecting cable, 5-pole, A-coded, length 5 m (PG 203590)		00638337
JUMO M12 digiLine master connecting cable, 5-pole, A-coded, length 1,5 m (PG 203590)		00638333
JUMO M12 connecting cable, 5-pole, A-coded, length 15 m		00638324
JUMO M12 connecting cable, 5-pole, A-coded, length 10 m		00638322
JUMO M12 connecting cable, 5-pole, A-coded, length 5 m		00638315
JUMO M12 connecting cable, 5-pole, A-coded, length 1,5 m		00638313
JUMO M12 connecting cable, 5-pole, A-coded, length 0,5 m		00638312
JUMO Y-distributor 5-pole (connector, socket, socket)		00638327
USB converter (Y distributor M12, USB, DC coupling)	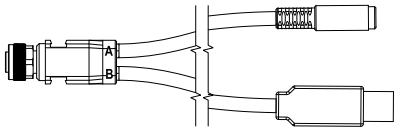	00746250

Electronics

Designation	Figure	Part no.
Plug-in power supply unit 24 V / 1 A		00743955
JUMO digiLine hub		00646871
JUMO power supply unit for digiLine hub		00661597

2 Identifying the device version

Software

Designation	Part no.
Setup program digiline DSM	00655787
Setup program digiline DSM including data management	00663703

Fittings

Designation	Part no.
PVC flow fitting, angled seat	00740925
Suspended fitting, PVC, immersion length 1300 mm	00740927
Suspended fitting with cleaning kit, PVC, immersion length 1300 mm	00740929
Retrofit kit – cleaning kit for suspended fitting	00741086
Immersion fitting, PVC, immersion length 1700 mm	00746563
Immersion fitting, PVC, immersion length 2950 mm	00740928
Immersion fitting with cleaning kit, PVC, immersion length 1700 mm	00746564
Immersion fitting with cleaning kit, PVC, immersion length 2950 mm	00740931
Retrofit kit – cleaning kit for immersion fitting	00741090
Support pillar with pedestal base, cantilever arm, and chain	00398163
Additional cross clamp for support pillar, required to attach the immersion fitting	00605468

Suitable indicating devices/controllers

Designation	Figure	Part no.
Modular multichannel measuring devices for liquid analysis with integrated controller and paperless recorder **JUMO AQUIS touch S/P**		Refer to data sheets 202580/ 202581
Scalable measurement, control, and automation system **JUMO mTRON T**		Refer to data sheets 705000/ 705001
JUMO AQUIS 500 RS indicating device/controller		See data sheet 202569

Accessories for JUMO AQUIS touch S/P

Designation	Part no.
Pipe-mounted kit for AQUIS touch S	00602401
Protective roof kit for AQUIS touch S	00602404
Setup program AQUIS touch S/P on mini-DVD	00594355

Accessories for JUMO AQUIS 500RS

Designation	Part no.
Pipe-mounted kit for AQUIS 500 RS	00398162
Weather protection canopy for AQUIS 500 RS	00398161
Setup program for JUMO AQUIS 500 on DVD	00483602
PC interface, converter RS232/TTL	00301315
PC interface, converter USB/TTL and adapter (pins/socket)	00456352

3 Mounting

NOTE!

Installation of the sensor may only be carried out by qualified personnel!

3.1 Mounting site and environmental conditions

A suspended fitting or an immersion fitting (particularly suitable for aeration tanks) from JUMO should preferably be used for mounting the sensor in a basin, a tank, or a container.

An insertion location representative for the typical oxygen concentration should be planned for the immersion operation.

Our own flow fittings should preferably be used for mounting the sensor in the supply line for the medium being measured or in the bypass.

A mounting site for the fitting should be selected that enables easy access for any subsequent calibration. It must be ensured that support pillars and fittings are mounted securely and in a way that subjects them to no more than low levels of vibration.

Electromagnetic fields, caused by equipment such as motors and transformers, should be avoided. The ambient temperature at the mounting site and the relative humidity must correspond to the information in the "Technical data" chapter.

CAUTION!

Risk of damage to the sensor membrane due to chemicals.

A damaged membrane can lead to incorrect measurement results.

▶ The sensor membrane should be prevented from coming into contact with chlorine gas, organic solvents, strong acids, and peroxides.

CAUTION!

Risk of damage to the sensor membrane due to mechanical influences.

A damaged membrane can lead to incorrect measurement results.

▶ The sensor membrane should be protected from mechanical loads, such as an abrasive particle stream in the measurement medium.

3.2 Sensor fittings

3.2.1 Suspended fitting

The suspended fitting holds the JUMO digiLine O-DO S10 oxygen sensor and is primarily used to take measurements from open basins or channels. It can be attached to a support pillar by means of a cross clamp and positioned far from the basin edge with the retaining bracket hanging from a chain ⇨chapter 3.5 "Setup of a measuring point with support pillar", Page 32. Different immersion depths are possible through the use of different immersion pipe lengths.

Please note the following when planning your set-up:

- The fitting must be easily accessible to allow the sensor or the fitting itself to be maintained and cleaned regularly.
- Do not allow the fitting (and thus also the sensor) to swing against and hit the basin edge.
- When working with systems involving temperature, ensure that the fitting and sensor meet the requirements.
- The system designer must check that the materials in the fitting and sensor are suitable for the measurement (chemical compatibility, for instance).

Suspended fitting		
Materials	Flow body:	PVC
	Electrode holder:	PVC
Admissible temperature	0 to 60 °C	
Pressure resistance	Only for depressurized applications	
Immersion length	1300 mm	
Part no.	00740927	

3 Mounting

Suspended fitting dimensions

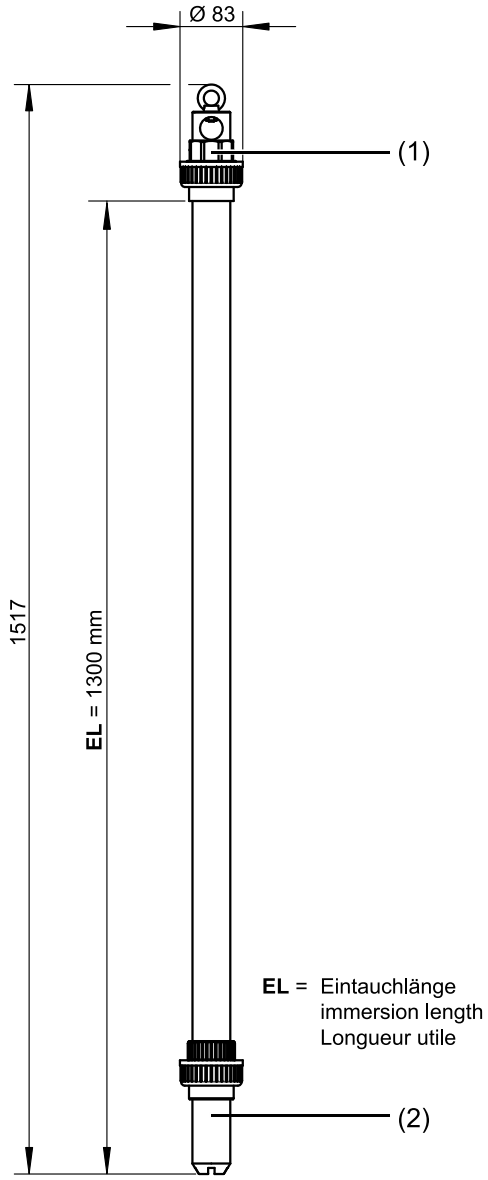

(1) Fastener with chain holder

(2) Sensor holder

Suspended fitting with cleaning kit

The suspended fitting with cleaning kit enables water/air flushing of the built-in sensor.

The cleaning kit is also available as a **retrofit kit for installation on an existing suspended fitting**.

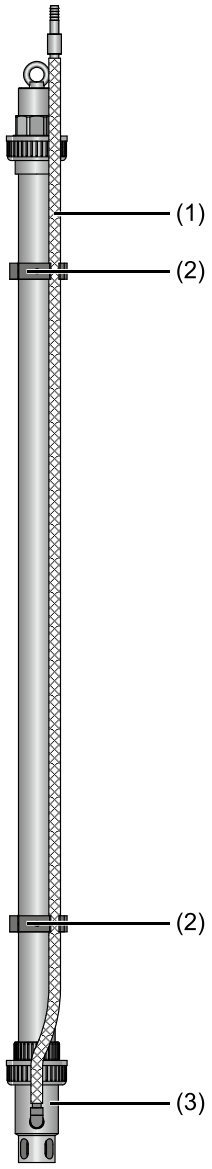

(1) PVC fabric hose
(2) Pipe clip
(3) Sensor holder with spray head

Suspended fitting with cleaning kit		
Materials	Pipe:	PVC
	Sensor holder:	PVC
	Fabric hose:	PVC
	Pipe clips:	PP
Admissible temperature	0 to 60 °C	
Pressure resistance	For depressurized applications	
Cleaning pressure	max. 3 bar	
Immersion length	1300 mm	
Part no.	Suspended fitting with cleaning kit	00740929
	Cleaning kit (retrofit kit)	00741086

3.2.2 Immersion fitting

The immersion fitting holds the JUMO digiLine O-DO S10 oxygen sensor. It is angled at the bottom and is primarily used for taking measurements from aeration tanks. It protects the sensor and allows you to take measurements at various immersion depths. The fitting can be mounted on the edge of the basin or attached to a support pillar using a cross clamp ⇨chapter 3.5 "Setup of a measuring point with support pillar", Page 32.

Please note the following when planning your set-up:

- The fitting must be easily accessible to allow the sensor or the fitting itself to be maintained and cleaned regularly.
- Do not allow the fitting (and thus also the sensor) to swing against and hit the basin edge.
- When working with systems involving temperature, ensure that the fitting and sensor meet the requirements.
- The system designer must check that the materials in the fitting and sensor are suitable for the measurement (chemical compatibility, for instance).

Suspended fitting		
Materials	Flow body:	PVC
	Electrode holder:	PVC
Admissible temperature	0 to 60 °C	
Pressure resistance	Only for depressurized applications	
Immersion length	2950 mm, optional 1700 mm	
Part no.	00740928 (immersion length 2950 mm) 00746563 (immersion length 1700 mm)	

Immersion fitting dimensions

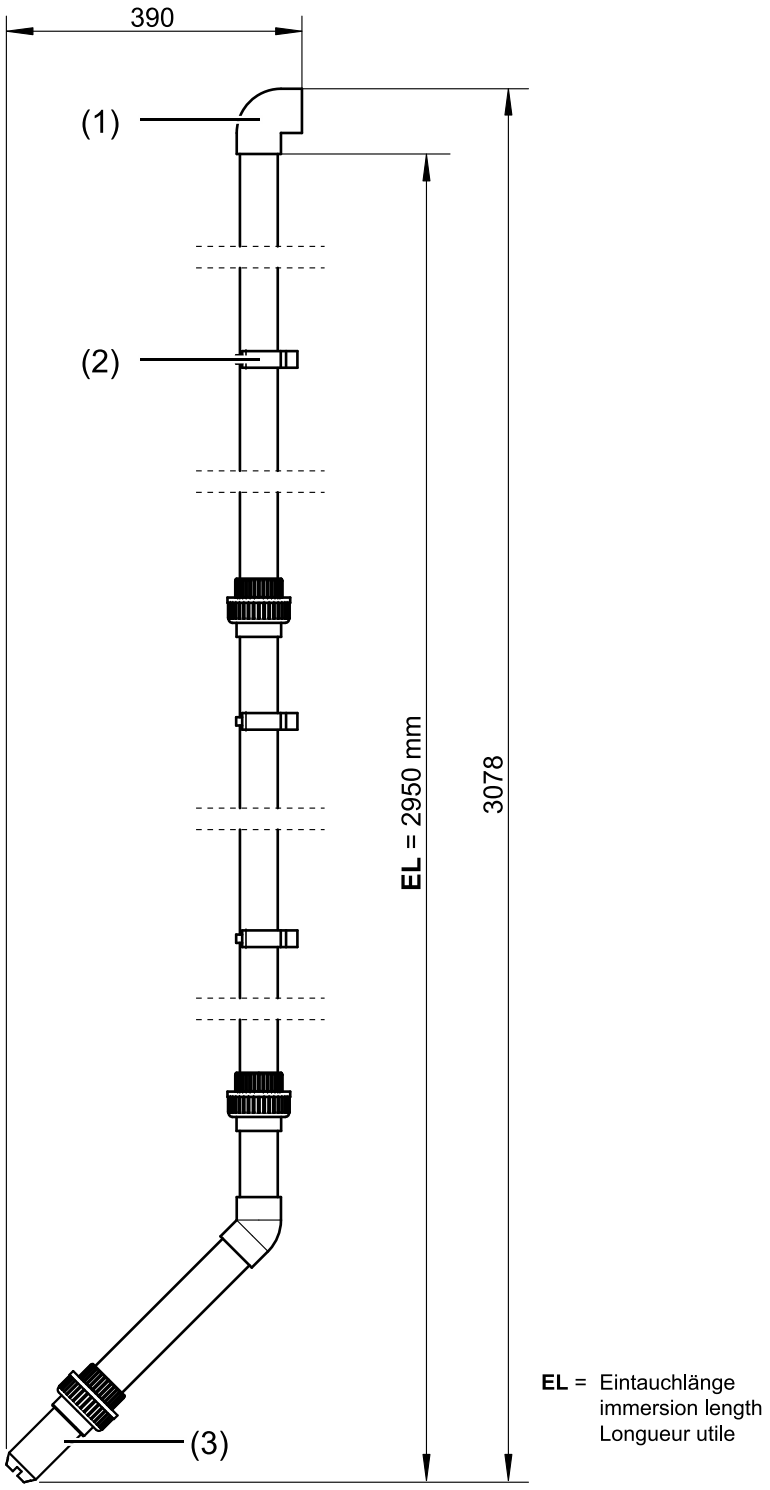

(1) Angled fastener
(2) Pipe clamp
(3) Sensor holder

Immersion fitting with cleaning kit

The immersion fitting with cleaning kit enables water/air flushing of the built-in sensor.

The cleaning kit is also available as a **retrofit kit for installation on an existing immersion fitting**.

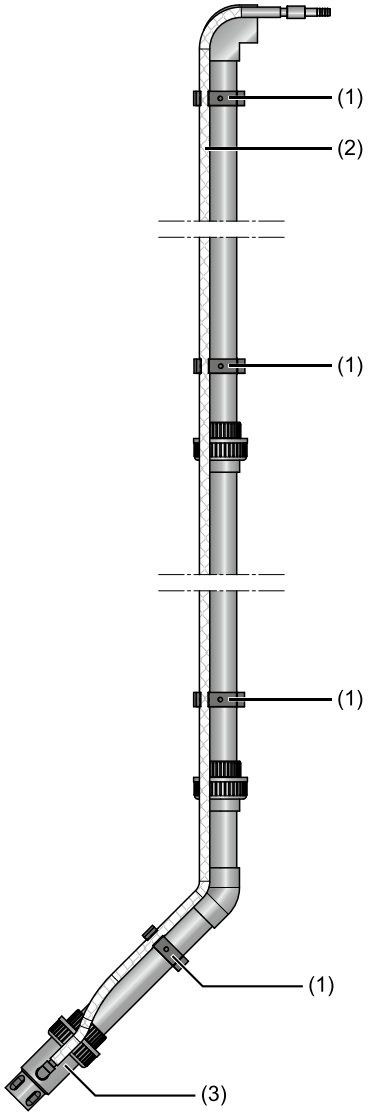

(1) Pipe clip
(2) PVC fabric hose
(3) Sensor holder with spray head

Immersion fitting with cleaning kit		
Materials	Pipe:	PVC
	Sensor holder:	PVC
	Fabric hose:	PVC
	Pipe clips:	PP
Admissible temperature	0 to 60 °C	
Pressure resistance	For depressurized applications	
Cleaning pressure	max. 3 bar	
Part no.	Immersion fitting 202614 with cleaning kit, EL = 2950 mm	00740931
	Immersion fitting 202614 with cleaning kit, EL = 1700 mm	00746564
	Retrofit kit of cleaning kit for immersion fitting 202614	00741090

3.2.3 Flow fitting

The flow fitting holds the JUMO digiLine O-DO S10 oxygen sensor and is mounted directly in the supply line for the medium being measured or in the bypass. Its special design type ensures the correct inflow to the sensor, thus preventing incorrect measurements. Please note the following when planning your piping set-up:

- The fitting must be easily accessible to allow the sensor or the fitting itself to be maintained and cleaned regularly.
- We recommend bypass measurements. The use of shut-off valves should enable the removal of the sensor.
- When working with systems involving pressure and/or temperature, ensure that the fitting and sensor meet all relevant requirements.
- The system designer must check that the materials in the fitting and sensor are suitable for the measurement (chemical compatibility, for instance).

PVC flow fitting, angled seat	
Material	PVC
Admissible temperature	0 to 60 °C
Pressure resistance	Up to 5 bar
Connection	Bonded socket joints
Process connection	T-piece DN 40, 45°
Part no.	00740925

Flow fitting dimensions

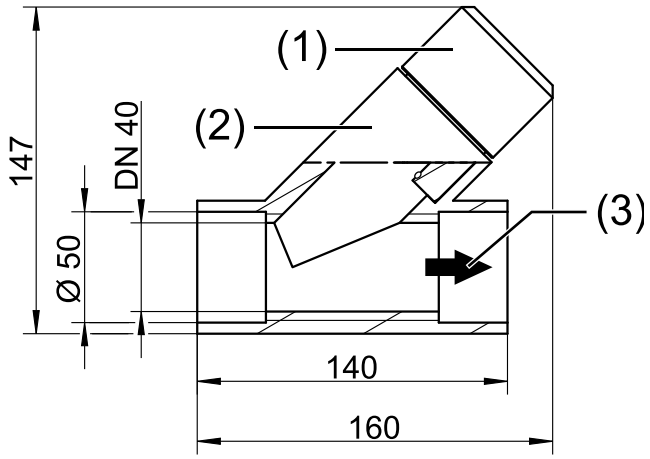

(1) Sensor holder
(2) T-piece DN 40, 45°
(3) Flow direction

3 Mounting

3.3 Insertion in fittings

3.3.1 Installation of the sensor in the suspended or immersion fitting

The following description also applies to the installation of the sensor in the suspended or immersion fitting with cleaning set.

NOTICE!

Damage to the sensor membrane (4) due to mechanical influences.

A damaged membrane leads to incorrect measurement results.

▶ Avoid mechanical load (pressure on the membrane)!

Material	Mounting set (union nut with thread G 1“ + 2 snap rings, part no. 00730253)
	Suspended or immersion fitting in the desired version, see chapter 2.4 "Accessories", Page 14.

Installation of the sensor in the sensor holder

1. Unscrew the union nut of the fitting (1) from the fitting (3) and remove the sensor holder (2).

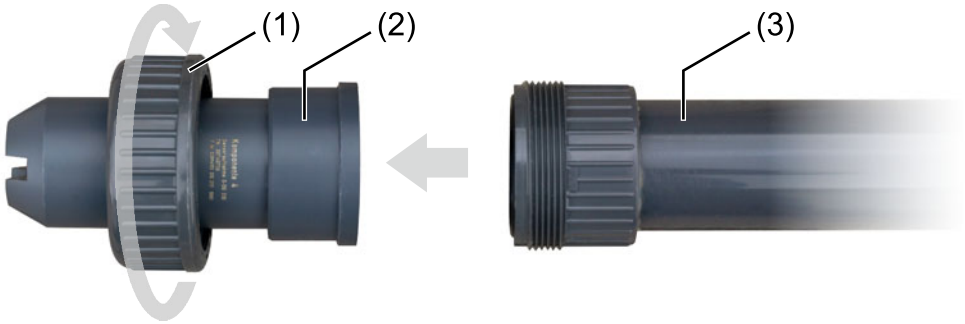

2. Push the union nut (5) of the sensor over the sensor to the end position (arrow head).



3. Push the snap ring (6) over the sensor.
4. First pull one, then the other leg into the groove provided for the snap ring.



The sensor is prepared for mounting in the sensor holder.

5. Push the sensor as far as possible into the sensor holder (2).
6. Turn the sensor union nut (5) to fully insert the sensor into the sensor holder.



Running the sensor cable through the suspended fitting

1. Unscrew the rear union nut (1).
2. Remove the fastener with chain holder (6).
3. Feed the sensor cable with connector through the hole (7) on the side of the fastener.



4. Screw the fastener with the union nut onto the end of the fitting.

3 Mounting

Running the sensor cable through the immersion fitting

1. Feed the cable with connector through all components of the fitting.
2. Feed the cable with connector through the angled end piece (8).

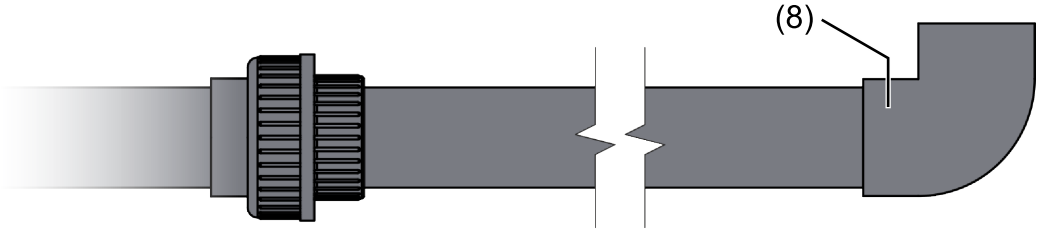

Finishing the sensor installation

1. Insert the sensor holder with sensor into the fitting.
2. Slide the union nut of the fitting over the sensor holder with sensor and screw it hand-tight to the fitting.



3. Hang or fasten the fitting with sensor at the place of use.

3.3.2 Insertion of the sensor into the PVC flow fitting

Installation of the union nut

1. Push the union nut (5) of the sensor over the sensor to the end position (arrow head).



2. Push the snap ring (6) over the sensor.
3. First pull one, then the other leg into the groove provided for the snap ring.



The sensor is ready for installation in the flow-through fitting.

Installing the sensor in the flow fitting

1. Moisten the tip of the sensor with a little water.
2. Insert the sensor into the flow fitting (1) until it reaches the position shown in the picture on the left.

NOTE!

Use some force for further insertion, as a sealing O-ring is installed into the flow fitting.

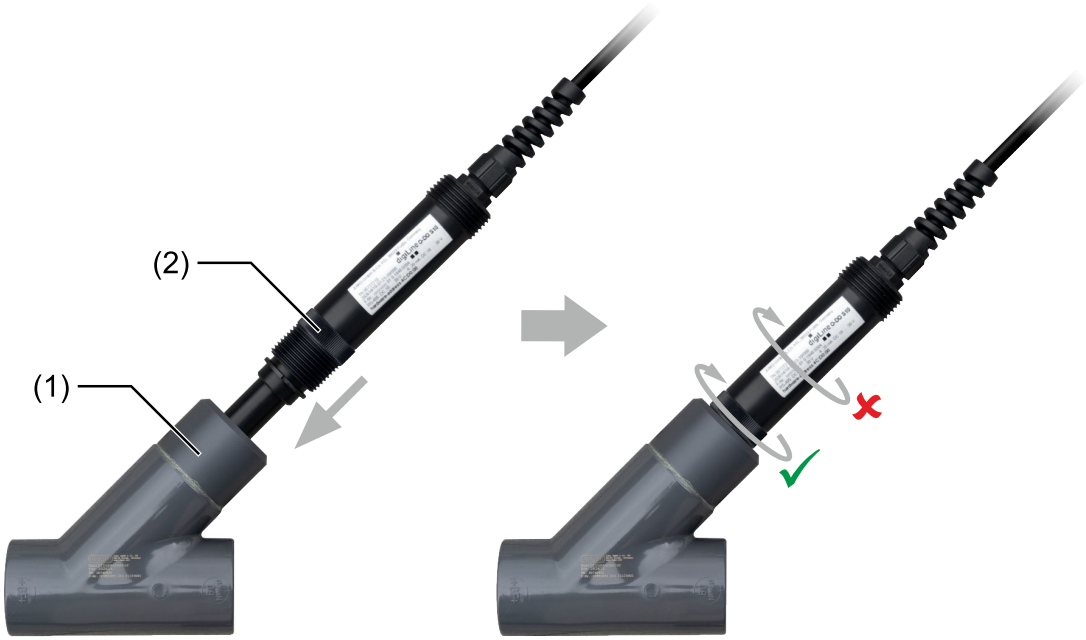

3. Push the sensor into the flow fitting as far as it will go.
4. Screw the sensor union nut (2) hand-tight into the flow fitting as far as it will go.

The sensor is located in the correct position in the fitting for operation.

3.3.3 Installation of the sensor in an on-site immersion fitting

Another installation option for the JUMO digiLine O-DO S10 is installation in an immersion fitting provided by the user with the aid of the **installation adapter set** (part no.: 00747563) ⇨chapter 2.4 "Accessories", Page 14.

Download mounting set gluing instructions

qr-202614-en.jumo.info

3.4 Removal from the sensor holder

NOTICE!

Loss or damage of the sensor cap when removing the sensor

The sensor cap remains in the sensor holder when the sensor or the sensor holder is rotated.

▶ Turn only the sensor union nut.

3.5 Setup of a measuring point with support pillar

The support pillar with pedestal base, cantilever arm, and chain is intended for mounting on the edge of the basin. The JUMO digiLine O-DO S10 sensor is mounted either in a suspended fitting or an immersion fitting, as described above. It is possible to set various immersion depths and clearances from the basin edge using the cantilever arm and the chain (for suspended fitting) and the cross clamp (for immersion fitting).

The weather protection canopy protects the indicating device from the influence of weathering.

Using the pipe-mounted kit, it is possible to secure the indicating device to a pipe (Ø 30 to 50 mm).

Please note the following when planning your set-up:

- The fitting must be easily accessible to allow the digital indicator or the fitting itself to be maintained and cleaned regularly.
- Do not allow the fitting (and thus also the sensor) to swing against and hit the basin edge.
- Avoid direct sunlight on the indicating device.
- The system designer must check that the materials in the fitting and sensor are suitable for the measurement (chemical compatibility, for instance).

Materials for the measuring point components.

Designation	Material	Part no.
Support pillar	Stainless steel	00398163
Pedestal base	Die-cast aluminum	
Cantilever arm	Stainless steel	
Chain	Stainless steel	

Pipe-mounted kit	Stainless steel	00398162, 00602401
Weather protection canopy	Stainless steel	00398161, 00602404
Suspended fitting	PVC	00740927
Immersion fitting	PVC	00740928
Cross clamp	Die-cast aluminum	00605468

Setup of the measuring point with the AQUIS 500 RS transmitter/controller

This setup can be realized in the same way with the modular AQUIS touch S multichannel measuring device.

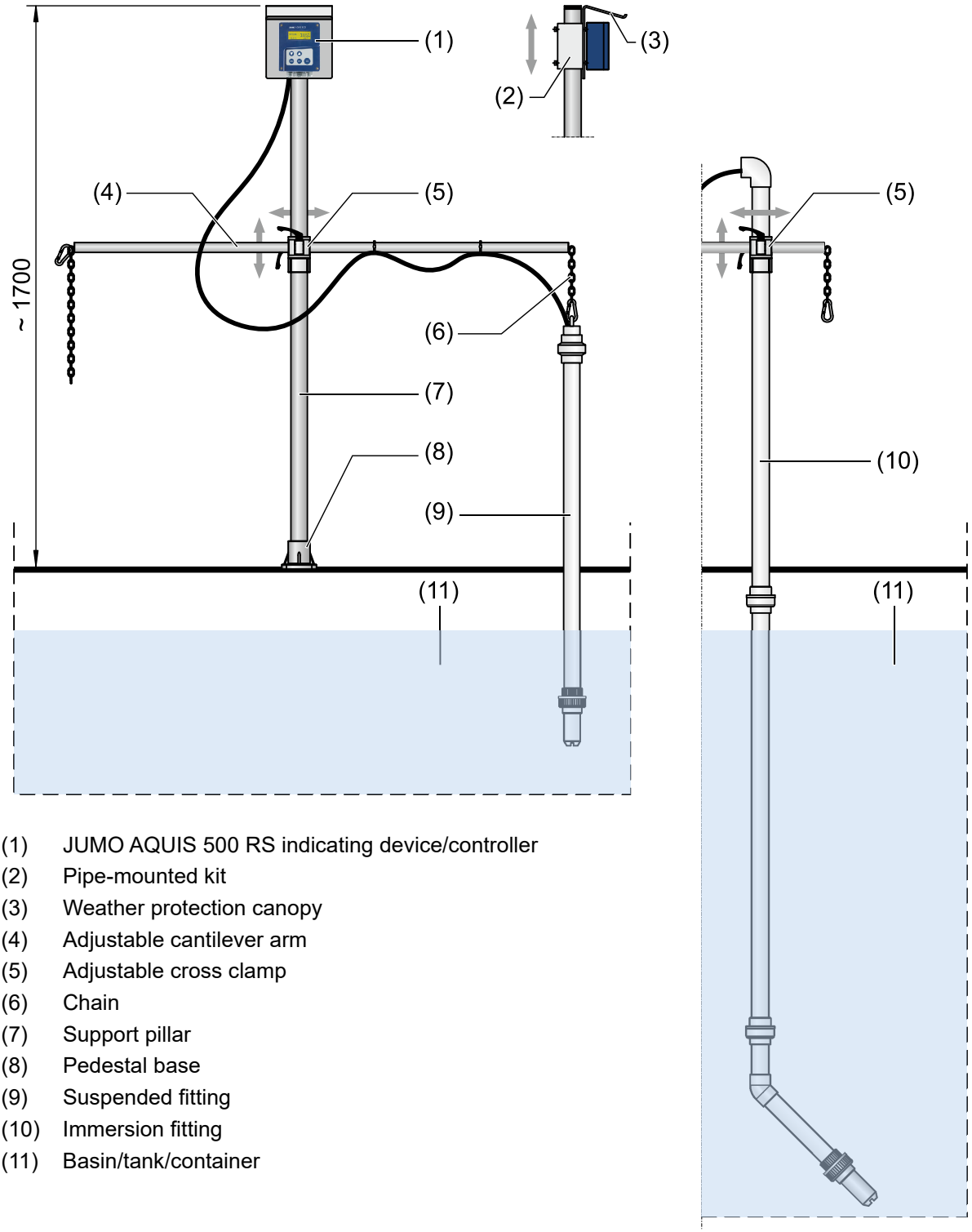

(1) JUMO AQUIS 500 RS indicating device/controller
(2) Pipe-mounted kit
(3) Weather protection canopy
(4) Adjustable cantilever arm
(5) Adjustable cross clamp
(6) Chain
(7) Support pillar
(8) Pedestal base
(9) Suspended fitting
(10) Immersion fitting
(11) Basin/tank/container

3.6 Sensor dimensions

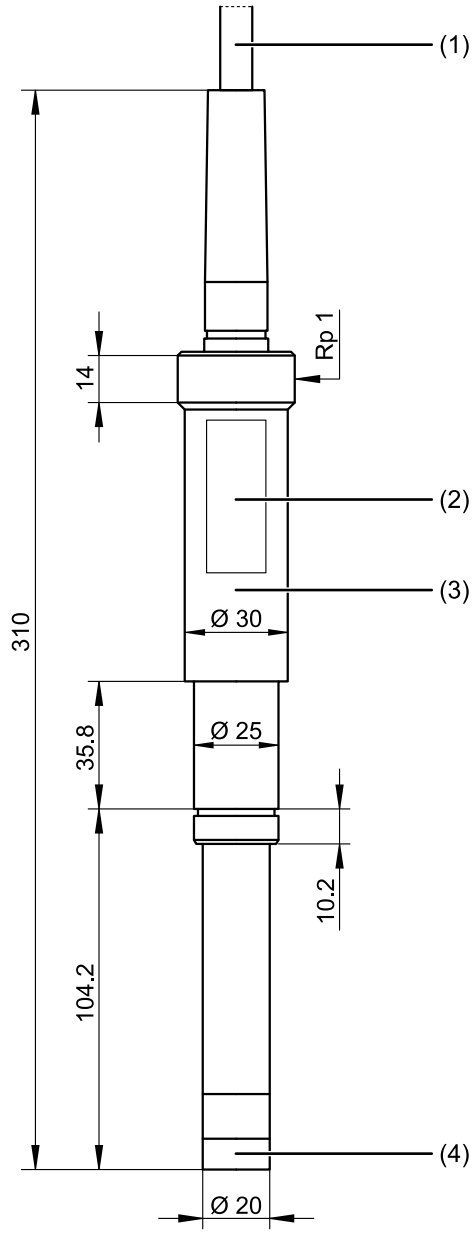

(1) Connecting cable (fixed cable with M12 connector)
(2) Nameplate
(3) Sensor body with optoelectronics
(4) Unscrewable sensor cap with luminophore

4.1 Fixed cable with M12 plug, A-coded

Function	**Pin**	**Figure** (socket)
not connected	1	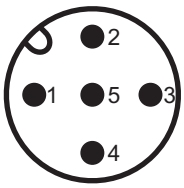
+24 V voltage supply	2	
GND	3	
RS485 (RxD/TxD-)	4	
RS485 (RxD/TxD+)	5	

The connection to the serial interface of a master device or a transmitter with screw or spring-cage terminals is established with the aid of the JUMO M12 digiLine master connecting cable (⇨chapter 2.4 "Accessories", Page 14).

Depending on the device type, the appropriate master connecting cable must be selected (⇨chapter 4.3 "Connection examples", Page 36).

If the sensor is to output the measured value as an analog signal 4 to 20 mA (two-wire current interface), only the pins 2 (+24 V) and 3 (GND) are required.

4.2 Connection to transmitters/controllers

The connection of the sensor to the modular JUMO AQUIS touch multichannel measuring device, the JUMO AQUIS 500 RS transmitter/controller and the JUMO mTRON T automation system is described in detail in the respective operating manuals of the devices.

- JUMO AQUIS touch ⇨ Information under the keyword "digital sensors"
- JUMO AQUIS 500 RS ⇨ Chapter "Installation>Terminal assignment"
- JUMO mTRON T ⇨ JUMO digiLine interface description

The examples shown below each illustrate the basic scheme of connection to the devices listed above.

4 Electrical connection

4.3 Connection examples

Connection example with JUMO AQUIS touch S (JUMO digiLine operation)

The example shown below shows an installation for monitoring an aquaculture. 3 sensors (for the measurands of conductivity, oxygen content, and pH) are connected to a JUMO AQUIS touch S. The sensors are connected to one another via a JUMO digiLine hub and M12 connecting cables. Appropriate fittings are available from JUMO for mounting the sensors.

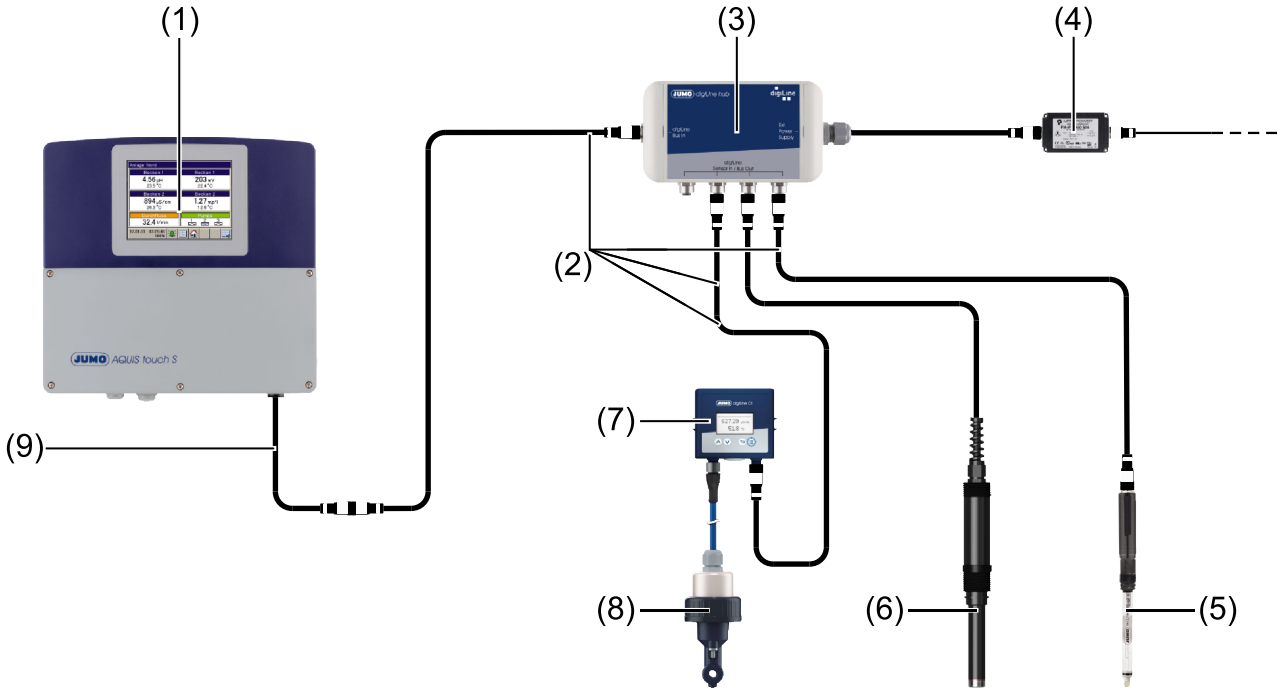

1 JUMO AQUIS touch S with RS485 bus termination in the device

2 JUMO M12 connecting cable, five-pole and A-coded;
the required total line length between master and sensors can be achieved by combining several M12 connecting cables. When planning the line lengths, heed the information regarding cable planning in the Annex of the operating manual for the JUMO AQUIS touch S/P.

3 JUMO digiLine hub with 4× M12 sockets and 1× M12 plug connector, each 5-pole A-coded; supply DC 24 V with separate power supply unit

4 Separate DC 24 V power supply unit for the voltage supply to the JUMO digiLine-bus system

5 JUMO pH sensor with 5-pole JUMO digiLine pH

6 JUMO digiLine O-DO S10 – optical oxygen sensor for dissolved oxygen

7 JUMO digiLine Ci

8 Inductive conductivity sensor

9 JUMO digiLine master connecting cable (product group 203590) with exposed wire ends at one end for connection to devices with screw or spring-cage terminals; connection is described in the operating manual of the JUMO AQUIS touch S/P.

Connection example with JUMO mTRON T (Modbus operation)

The example shown below shows an installation for monitoring an aquaculture. 3 sensors (for the measurands of conductivity, oxygen content, and pH) are connected to a JUMO mTRON T. The sensors are connected to one another via a JUMO digiLine hub and M12 connecting cables. Appropriate fittings are available from JUMO for mounting the sensors.

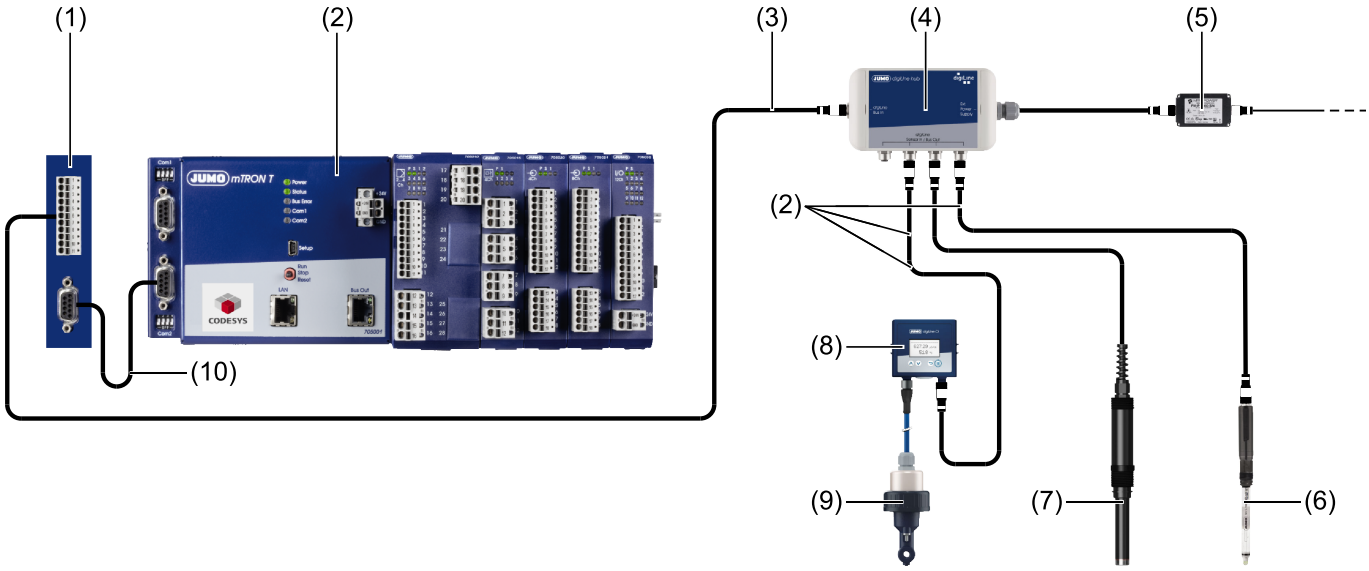

1 Interface module for digiLine master connecting cable, with screw terminals and 9-pole D-sub pin header
2 mTRON T central processing unit with RS485 interface as digiLine master (Modbus master)
3 JUMO digiLine master connecting cable **for 705001** with exposed wire ends at one end for connection to devices with screw or spring-cage terminals (for connection see interface description for the JUMO digiLine of the JUMO mTRON T)
4 JUMO digiLine hub with 4× M12 sockets and 1× M12 plug connector, each 5-pole A-coded; supply DC 24 V with separate power supply unit
5 separate DC 24 V power supply unit for the voltage supply to the JUMO digiLine-bus system
6 JUMO pH sensor with 5-pole JUMO digiLine pH
7 JUMO digiLine O-DO S10 – optical oxygen sensor for dissolved oxygen
8 JUMO digiLine Ci in the device version with separate sensor
9 inductive conductivity sensor
10 D-sub connecting cable (round), 9-pole socket and pin header

Wiring diagram for Modbus mode

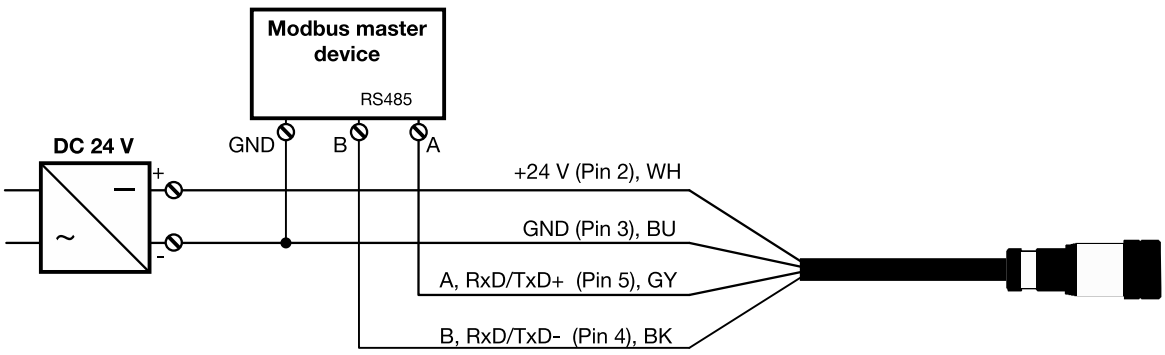

4 Electrical connection

Connection example with JUMO AQUIS 500 RS

The example shown below shows an installation for monitoring the oxygen content in a sewage treatment plant. The JUMO digiLine O-DO S10 is connected to the single-channel indicating device/controller JUMO AQUIS 500 RS. Appropriate fittings are available from JUMO for mounting the sensor.

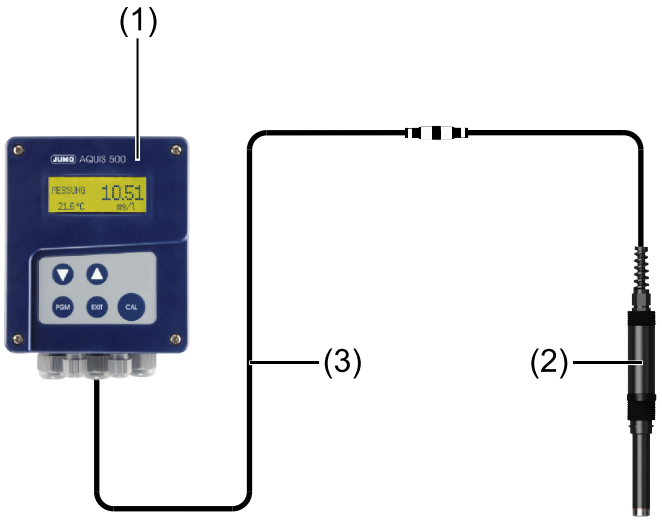

1 JUMO AQUIS 500 RS – indicating device and controller for digital sensors
2 JUMO digiLine O-DO S10 – optical oxygen sensor for dissolved oxygen
3 JUMO digiLine master connecting cable **for 705001** with exposed wire ends at one end for connection to devices with screw or spring-cage terminals (for connection see the operating manual of the JUMO AQUIS 500 RS)

Two-wire current interface operation (standard signal 4 to 20 mA) of the JUMO digiLine O-DO S10

The connection of a sensor JUMO digiLine O-DO S10 to a measuring device/automation device as a two-wire transmitter with a standard signal 4 to 20 mA. The sensor can be connected to a PC using the USB converter that is available as an accessory (part no. 00746250) and configured and calibrated using the JUMO DSM software.

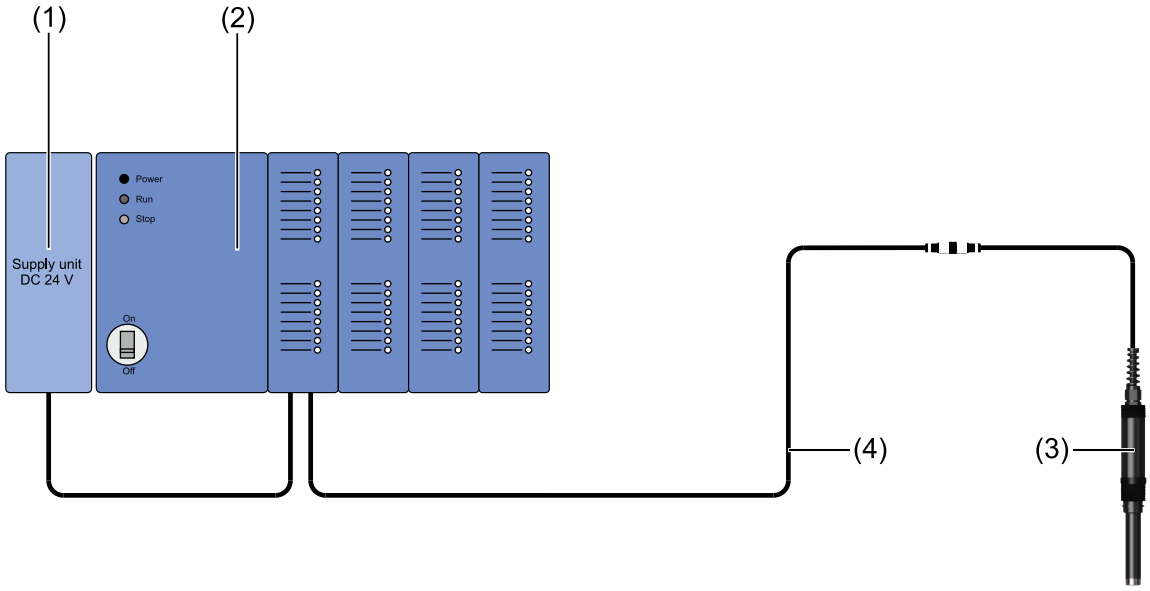

1 Stabilized power supply unit with DC 24 V output to supply the automation system, the current loop (standard signal of 4 to 20 mA), and the sensor
2 Measuring or automation device with analog input for the standard signal of 4 to 20 mA; the current loop for the standard signal must be supplied with an output voltage of DC 18 to 30 V by a stabilized power supply unit.
3 JUMO digiLine O-DO S10 – optical oxygen sensor for dissolved oxygen
4 JUMO digiLine master connecting cable **for 705001** with exposed wire ends at one end for connection to devices with screw or spring-cage terminals.

Wiring diagram for two-wire current interface operation

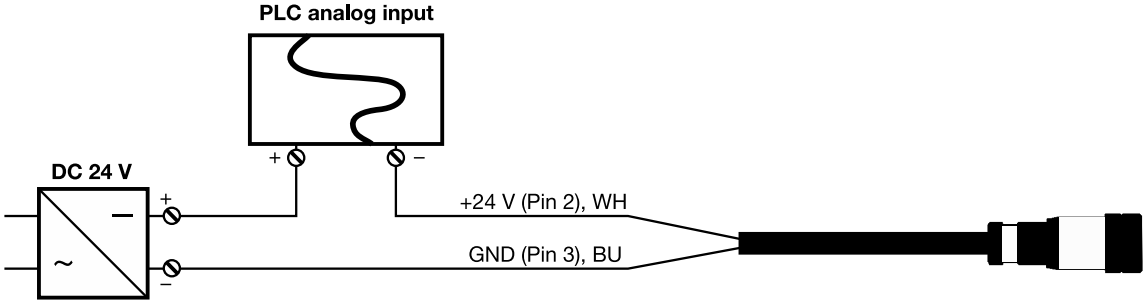

5 Startup

5.1 Initial startup

The following requirements must be met for initial startup:

- The sensor was installed in a fitting.
- The sensor has been electrically connected to a JUMO digiLine or Modbus master device.
- The sensor has been configured; either on a JUMO digiLine or Modbus master device, or using the JUMO DSM.

The sensor will have been checked to ensure correct function and calibrated at the production plant, and it is delivered ready for operation. It is therefore not necessary to carry out calibration prior to initial start-up.

Both interfaces are configured according to the default settings:

RS485 Modbus	38400 Bd, 2 stop bits, no parity, device address 1
4 to 20 mA two-wire current interface	Measuring range 0 to 200 % sat.

The following points should be taken into account when carrying out initial startup on the sensor:

- To avoid moisture problems, the sensor cap must be screwed tightly onto the sensor shaft and the orange O-ring located between the shaft and the cap must be undamaged.
- For optimum, error-free measurement, air bubbles adhering to the sensor membrane must be avoided.
- During the initial startup of the sensor, following insertion into the measurement medium, you should wait until constant temperature has been reached (isothermal conditions).



NOTE!

The sensor does not perform continuous measurement. The sampling interval is 3 seconds. A moving average of 10 values is used.

Please also observe the following notes when operating the sensor in its measuring environment:



CAUTION!

Risk of damage to the sensor membrane due to chemicals.

A damaged membrane can lead to incorrect measurement results.

▶ Make sure that the sensor membrane does not come into contact with chlorine gas, organic solvents, strong acids, and peroxides.



CAUTION!

Risk of damage to the sensor membrane due to mechanical influences.

A damaged membrane can lead to incorrect measurement results.

▶ Make sure that mechanical loads on the sensor membrane, e.g. due to abrasive particle stream in the measuring medium, is avoided.



CAUTION!

Cross sensitivity of the sensor

The presence of chlorine in the measurement medium can distort the measurement result (measured value displayed may be too high).

▶ Check the measurement medium for the presence of chlorine.

5.2 Calibration interval

With the JUMO digiLine O-DO S10, it is recommended to perform at least one calibration per year, depending on the operating conditions.

After replacing the sensor cap, a calibration **must** be performed.

In addition, regular cleaning of the sensor is recommended. After cleaning, check the zero point (0 % saturation). The zero point can be checked in a water-sulfite solution with a sulfite concentration of < 2%.



CAUTION!

Risk of damage to the sensor membrane due to chemicals.

A damaged membrane can lead to incorrect measurement results.

▶ Make sure that the sensor membrane does not remain in contact with the sulfite solution for more than 1 hour.

If the zero point is moved, a complete two-point calibration must be carried out.

5.3 Calibration



NOTE!

This chapter describes the process of calibration in general. The calibration of the sensor with the modular JUMO AQUIS touch multichannel measuring device or the JUMO AQUIS 500 RS transmitter/controller is described in detail in the respective operating manual for the devices.

The JUMO digiLine O-DO S10 also enables simple and convenient calibration and configuration already in the laboratory using the JUMO DSM PC software. This software can be used to calibrate the sensor for operation on the JUMO mTRON T automation system.

For the sensor there are basically 2 methods of calibration, the **end value calibration** and the **zero point calibration.**

For most applications, the end value calibration is sufficient. For very precise measurements below 10% saturation, it is also recommended to perform the zero point calibration.

The sensor independently checks the oxygen signal for correctness and stability during calibration.



NOTE!

Performing a successful calibration, especially the zero point calibration, takes some time and should be done carefully to avoid measurement errors.

5.3.1 End value calibration

With end value calibration, the slope of the sensor is calibrated beyond the defined state of 100 % oxygen saturation. This state can in principle be achieved in two ways:

- By positioning the sensor in water vapor-saturated air (for example, directly over a water surface).
- By positioning the sensor in air-saturated water (air is directed through water until the water is saturated with it).

NOTE!

As the manufacturing of air-saturated water requires a high level of effort and is difficult to reproduce, the easier process of calibration in water vapor-saturated air is recommended for the operational calibration.

Correct positioning of the sensor in a sample vessel with water vapor saturated air is shown in the figure below:

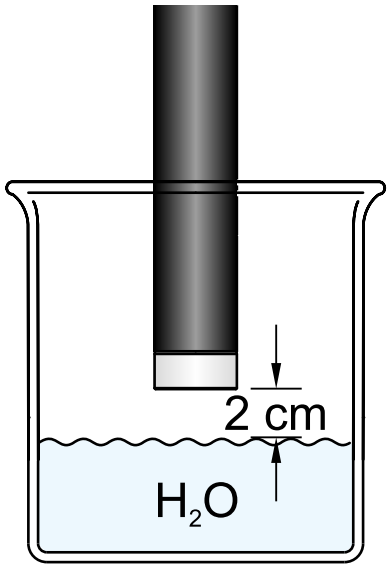

To achieve successful calibration, the following points must be taken into account:

- Both the sample vessel and the water must be clean.
- The water should not be freshly taken, but should remain in the sample vessel for at least 30 minutes before calibration, so that an equilibrium is established in the gas exchange between water and ambient air.
- Ideally, a holder should be installed to mount the sensor above the water surface.
- The sensor must be kept dry during the calibration process. Drops of water adhering to the sensor membrane could distort the measurement result.
- The air pressure and, above all, the temperature must remain constant during the calibration.
- Direct sunlight and drafts in the immediate vicinity of the sample vessel should be avoided.

Wait a few minutes until the measured temperature stops changing. In the event of larger temperature differences between water and air, this can take up to 30 minutes.

NOTE!

The sensor needs 10 to 15 minutes of warm-up time after being switched on. Measurements can be taken during this phase. For an optimal calibration, however, the process should not be started until the warm-up time has lapsed.

5.3.2 Zero point calibration

For very precise measurements in the range below 10% oxygen saturation, it is recommended to perform a zero point calibration in an oxygen-free environment in addition to the end value calibration.

Zero point calibration is performed after immersing the sensor in a **water-sodium sulfite solution**[1] **(sulfite concentration < 2%)** to determine the zero point (0% saturation).

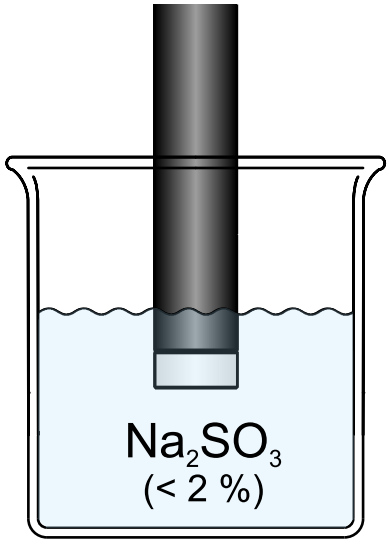

Wait a few minutes until the measured temperature stops changing. In the event of larger temperature differences between measurement medium and air, this can take up to 30 minutes.

CAUTION!

Risk of damage to the sensor membrane due to chemicals.

A damaged membrane can lead to incorrect measurement results.

▶ Make sure that the sensor membrane does not remain in contact with the sulfite solution for more than 1 hour.

NOTE!

The sensor needs 10 to 15 minutes of warm-up time after being switched on. Measurements can be taken during this phase. For an optimal calibration, however, the process should not be started until the warm-up time has lapsed.

[1] Source of supply for sodium sulfite: Relevant trade for laboratory chemicals.

5.3.3 Calibration logbook

A calibration logbook is stored in the sensor electronics; this calibration logbook has a record of the last 10 calibration operations with the date, time, and calibration values. This logbook provides an overview of the calibration history of the sensor. The calibration logbook can be extracted on either the JUMO AQUIS touch S/P, on the JUMO AQUIS 500 RS, or on the PC using the JUMO DSM software. The number of saved calibration logbook entries in the DSM database is unlimited.

One calibration logbook entry is made per calibration procedure (end value or zero point calibration).

The following table provides information about the availability of the logbook entry data:

Logbook entry	**AQUIS touch**	**AQUIS 500 RS**	**DSM**
Date and time	X	--	X
Calibration type (end value or zero point calibration)	X	X	X
Oxygen measured value (O_2 reference value in the configured unit)	X	X	X
Calibration unit (% sat., % vol., ppm, hPa pO_2)	X	X	X
Phase values (°deg)	X	X	X
Slope (Stern-Vollmer constant, C_sv)	X	X	X
Measured temperature value (°C)	X	X	X
Air pressure (hPa)	X	X	X
Operating hours	X	--	X

6.1 Removal of the sensor

NOTE!

Before removing the sensor from the process (the fitting), make sure that no process medium can escape during removal.

NOTICE!

Risk of damage to the sensor due to process medium entering during improper removal

A sensor cap that does not seal can cause damage to the sensor due to process medium entering.

▶ To remove the sensor, never turn the sensor at the sensor head or sensor body, but only at the sensor union nut. Especially when removing the sensor from the suspended or immersion fitting, the sensor cap may otherwise come loose and liquid may enter the inside of the sensor!

6.2 Cleaning the sensor

NOTE!

Maintenance of the sensor may only be carried out by qualified personnel!

If it is necessary to move the measured value during operation, you should first check the sensor for any deposits and contamination, clean it, and recalibrate it if necessary.

Please observe the following notes during ongoing operation of the sensor:

- Always keep the sensor clean, especially in the area of the optical membrane. The presence of a biofilm on the sensor cap can lead to measuring errors.
- Clean a dirty sensor cap membrane with warm water containing detergent. Use a soft sponge for cleaning (not an abrasive scouring pad with grinding effect).
- If you take the sensor out of service, rinse it before storing it.

6 Maintenance

6.3 Replacing the sensor cap

The sensor cap is a consumable. During use, the sensor cap ages and measured value drift may occur. This decreases over the duration of use of the sensor cap. In the first year of use, there may be a measured value drift of up to 3% at the saturation point (100% sat.), and of up to 2% at the zero point.

The measured value drift can be compensated via the sensor calibration.

First clean and calibrate the sensor if it is necessary to move the measured value during operation (offset).

NOTE!

The calibration of the sensor with the modular JUMO AQUIS touch multichannel measuring device or the JUMO AQUIS 500 RS transmitter/controller is described in detail in the respective operating manual for the devices.

The JUMO digiLine O-DO S10 also enables simple and convenient calibration and configuration already in the laboratory using the JUMO DSM PC software. This software can be used to calibrate the sensor for operation on the JUMO mTRON T automation system.

If cleaning and subsequent calibration cannot successfully be carried out, the sensor cap must be replaced as described below.

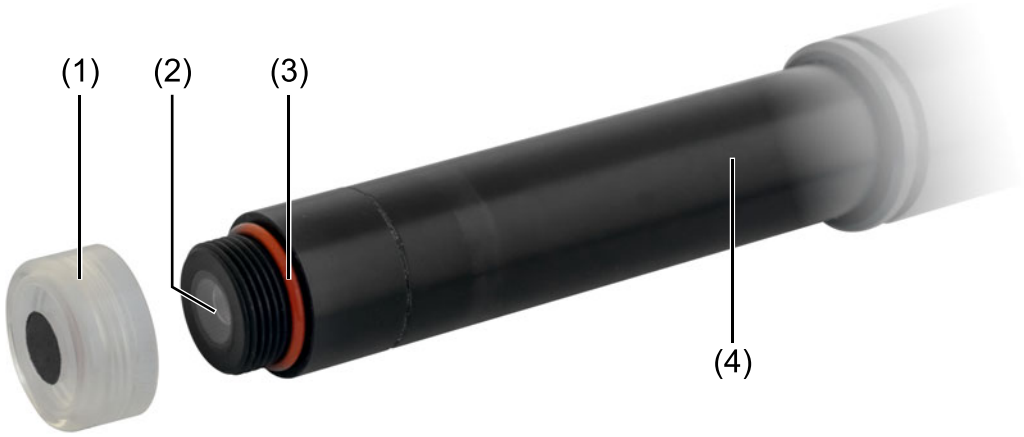

1. Unscrew the old sensor cap (1) from the shaft (4) by turning it counterclockwise. Make sure that the optical window (2) of the sensor is not touched and does not get dirty in the process. If this still happens, clean the optical window using a soft lint-free cloth.

NOTE!

If the sensor cap sits very tightly on the shaft and is difficult to move with the fingers, rubber gloves can be used to provide more grip.

2. Check the small O-ring (3) that seals the sensor cap against the sensor shaft. Replace it if there are signs of wear on the O-ring. A replacement O-ring is included with the replacement sensor cap.
3. Carefully screw the new sensor cap back onto the sensor shaft by turning it clockwise. Make sure that the gap between the shaft and the cap is closed, thus ensuring the sealing effect of the O-ring underneath.
4. Check the measured values of the sensor in water vapor-saturated air and, if necessary, also in oxygen-free medium. If the measured values deviate too much, perform a calibration.

6.4 Functions for self-diagnostics

The JUMO digiLine O-DO S10 has self-diagnostic features to detect possible malfunctions. The following information is supplied via the RS485 interface and is output as an alarm:

- Warning: State of the sensor element; cap replacement is recommended
- Warning: Temperature outside the measuring range
- Warning: Oxygen outside the measuring range
- Error: Measured temperature value invalid (this indicates a defective temperature sensor)
- Error: Measured oxygen value invalid (this indicates a defective oxygen measurement sensor)
- Error: State of the sensor element; sensor cap missing

The RS485 interface can thus be used to determine measured values outside of the tolerances or a failure of the oxygen and temperature measurement input both in JUMO digiLine operation and in Modbus operation.

The analog 4 to 20 mA interface can be configured in accordance with NAMUR recommendations, in order to display an abnormal event.

Note on sensor behavior when using the 4 to 20 mA two-wire current interface

If the voltage supply is too low, the interface is set to error mode internally in the sensor and an error current (e.g. 22 mA) is output. After 30 seconds, the error mode is cleared again and it is checked whether the error is still present.

7 Technical data

7.1 Specifications

Measuring principle	Optical measurement according to the principle of luminescence quenching
Measurands	Dissolved oxygen Temperature
Measuring ranges	
dissolved oxygen[a]	0.00 to 20.00 ppm (mg/l) 0.00 to 250.00 % sat. 0.00 to 52.00 % vol. 0.00 to 514.00 hPa pO_2[b]
Temperature	-5 to +50 °C[c,d]
Accuracy (at 25 °C)	
Basic tolerance	1 % SAT (≙ 0.1 mg/l or 0.2 % vol or 2 hPa pO_2)
plus	≤ 1 % of measured value from 0 % SAT ≤ 2 % of measured value at 100 % SAT ≤ 3 % of measured value at 200 % SAT
Response time (at 25 °C)	t_{90} < 60 s
Pressure range	0 to 5 bar
Ambient temperature	0 to +50 °C
Storage temperature	-10 to +60 °C
Temperature compensation	Via integrated temperature sensor, in the range of -10 to +60 °C
Air pressure compensation	10 to 2000 hPa
Salinity compensation	0.00 to 60.00 mS/cm[e]
Sampling interval	3 s
Protection type	IP68
Luminophore operating life	Up to 3 years (depending on the process conditions)

[a] The sensor is not suitable for measuring trace concentrations. The specifications are valid for the following environmental influences: temperature = 25 °C, air pressure = 1013 hPa, and salinity = 0 mS/cm.

[b] pO_2 = oxygen partial pressure. The measured values of this measuring range are calculated from the raw data. All other measured values are calculated by the sensor depending on the temperature, pressure, and salinity. The unit pO_2 is primarily suitable for measuring in gases; can only be used for special measurements in the liquid analysis.

[c] The oxygen measurement can be calibrated in the temperature range of +5 to 50°C. The temperature sensor built into the sensor may only be used for temperature measurement, but not for controlling a process temperature.

[d] The temperature probe built into the sensor is suitable for temperature measurement, but not for controlling a process temperature.

[e] Input value is the temperature-compensated electrolytic conductivity, reference temperature = 25 °C.

7.2 Interfaces

RS485 interface

Protocol	JUMO digiLine[a] Modbus RTU[b]
Device address	1 to 247
Data formats[c]	8 - 1 - no parity 8 - 2 - no parity 8 - 1 - odd parity 8 - 1 - even parity
Baud rates	9600 baud 19200 baud 38400 baud
Min. response time	Adjustable from 0 to 500 ms

[a] The JUMO digiLine protocol assigns the interface parameters automatically during startup (Plug and Play).

[b] The Modbus RTU protocol is intended to operate the sensor on a JUMO mTRON T CPU or a transmitter/controller AQUIS 500 RS. For operation on a JUMO mTRON T, the interface parameters must be set prior to initial startup with the JUMO DSM software. The JUMO AQUIS 500 RS recognizes the sensor automatically and sets the appropriate interface parameters.

[c] Specification in useful bit - stop bit - parity format.

4 to 20 mA two-wire current interface

Signal range	4 to 20 mA
Voltage supply	DC 18 to 30 V
Maximum load resistance	500 Ω
Accuracy	1 %
Ambient temperature influence	100 ppm/K

7.3 Electrical data

Voltage supply[a]	SELV or PELV
during operation of the RS485 interface	DC 10 to 30 V
during operation of the two-wire current interface	DC 18 to 30 V
Power consumption	
during operation of the RS485 interface	Approx. 70 mW without termination, max. 660 mW with termination
during operation of the two-wire current interface	Max. 660 mW
Electromagnetic compatibility	In accordance with DIN EN 61326-1
Interference emission	Class A
Interference immunity	Industrial requirements[b]
Protection rating	III

[a] The voltage supply for the digiLine bus must be rated as SELV or PELV.

[b] The sensor is not protected against surge voltages.

7 Technical data

7.4 Case

Dimensions	Ø 20 mm (shaft) × 310 mm (without connecting cable)
Weight	
Sensor including 10 m cable	770 g
Sensor including 30 m cable	1850 g
Admissible cable length	Max. 50 m
Materials coming into contact with the medium	
Sensor shaft	PVC
Sensor cap	PC
Connecting cable (sheath)	PUR
Cable passage	PA
Precautionary measures when using the product	The membrane must be protected against mechanical influences (impact, wear), solvents, and aggressive chemicals.
Protection type	IP68

7.5 Display units / controller

	Modular multichannel measuring devices for liquid analysis with integrated controller and paperless recorder **JUMO AQUIS touch S/P** ⇨ data sheets 202580/202581
	Indicating device/controller **JUMO AQUIS 500 RS** ⇨ data sheet 202569
	Scalable measurement, control, and automation system **JUMO mTRON T** ⇨ data sheets 705000/705001

8.1 Declaration of conformity

JUMO GmbH & Co. KG

Moritz-Juchheim-Straße 1
36039 Fulda, Germany

Tel.: +49 661 6003-0
Fax: +49 661 6003-500

E-Mail: mail@jumo.net
Internet: www.jumo.net

More than sensors + automation

EU-Konformitätserklärung

EU declaration of conformity / Déclaration UE de conformité

Dokument-Nr. *Document No. / Document n°.*	CE 822
Hersteller *Manufacturer / Etabli par*	JUMO GmbH & Co. KG
Anschrift *Address / Adresse*	Moritz-Juchheim-Straße 1, 36039 Fulda, Germany

Produkt
Product / Produit

Name *Name / Nom*	**Typ** *Type / Type*	**Typenblatt-Nr.** *Data sheet no. / N° Document d'identification*
JUMO digiLine O-DO S10	202614	202614

Wir erklären in alleiniger Verantwortung, dass das bezeichnete Produkt die Anforderungen der Europäischen Richtlinien erfüllt.

We hereby declare in sole responsibility that the designated product fulfills the requirements of the European Directives.

Nous déclare sous notre seule responsabilité que le produit remplit les Directives Européennes.

1. Richtlinie
Directive / Directive

Name *Name / Nom*	EMC
Fundstelle *Reference / Référence*	2014/30/EU
Bemerkung *Comment / Remarque*	Mod. A
Datum der Erstanbringung des CE-Zeichens auf dem Produkt *Date of first application of the CE mark to the product / Date de 1ère application du sigle sur le produit*	2021

JUMO GmbH & Co. KG

Moritz-Juchheim-Straße 1
36039 Fulda, Germany

Tel.: +49 661 6003-0
Fax: +49 661 6003-500

E-Mail: mail@jumo.net
Internet: www.jumo.net

More than sensors + automation

Angewendete Normen/Spezifikationen
Standards/Specifications applied / Normes/Spécifications appliquées

Fundstelle *Reference / Référence*	**Ausgabe** *Edition / Édition*	**Bemerkung** *Comment / Remarque*
EN 61326-1	2013	

Gültig für Typ
Valid for Type / Valable pour le type
202614/...

---

2. Richtlinie
Directive / Directive

Name
Name / Nom
RoHS

Fundstelle
Reference / Référence
2011/65/EU

Bemerkung
Comment / Remarque
Mod. A

Datum der Erstanbringung des CE-Zeichens auf dem Produkt
Date of first application of the CE mark to the product / Date de 1ère application du sigle sur le produit
2021

Angewendete Normen/Spezifikationen
Standards/Specifications applied / Normes/Spécifications appliquées

Fundstelle *Reference / Référence*	**Ausgabe** *Edition / Édition*	**Bemerkung** *Comment / Remarque*
VDK Umweltrelevante Aspekte bei der Produktentwicklung und -gestaltung	V1	

Gültig für Typ
Valid for Type / Valable pour le type
202614/...

JUMO GmbH & Co. KG

Moritz-Juchheim-Straße 1
36039 Fulda, Germany

Tel.: +49 661 6003-0
Fax: +49 661 6003-500

E-Mail: mail@jumo.net
Internet: www.jumo.net

More than sensors + automation

Aussteller *Issued by / Etabli par*	JUMO GmbH & Co. KG
Ort, Datum *Place, date / Lieu, date*	Fulda, 2021-01-07
Rechtsverbindliche Unterschriften *Legally binding signatures /* *Signatures juridiquement valable*	Geschäftsführer Dimitrios Charisiadis Qualitätsbeauftragter und Leiter Qualitätswesen i. V. Harald Gienger

产品组别 Product group: 202614	产品中有害物质的名称及含量 China EEP Hazardous Substances Information					
部件名称 Component Name						
	铅 （Pb）	汞 （Hg）	镉 （Cd）	六价铬 （Cr(VI)）	多溴联苯 （PBB）	多溴二苯醚 （PBDE）
外壳 Housing (Gehäuse)	○	○	○	○	○	○
过程连接 Process connection (Prozessanschluss)	○	○	○	○	○	○
螺母 Nuts (Mutter)	○	○	○	○	○	○
螺栓 Screw (Schraube)	○	○	○	○	○	○

本表格依据SJ/T 11364的规定编制。
This table is prepared in accordance with the provisions SJ/T 11364.
○：表示该有害物质在该部件所有均质材料中的含量均在GB/T 26572规定的限量要求以下。
Indicate the hazardous substances in all homogeneous materials' for the part is below the limit of the GB/T 26572.

×：表示该有害物质至少在该部件的某一均质材料中的含量超出GB/T 26572规定的限量要求。
Indicate the hazardous substances in at least one homogeneous materials' of the part is exceeded the limit of the GB/T 26572.

JUMO GmbH & Co. KG
Street address:
Moritz-Juchheim-Straße 1
36039 Fulda, Germany
Delivery address:
Mackenrodtstraße 14
36039 Fulda, Germany
Postal address:
36035 Fulda, Germany
Phone: +49 661 6003-0
Fax: +49 661 6003-607
Email: mail@jumo.net
Internet: www.jumo.net

JUMO UK LTD
JUMO House
Temple Bank, Riverway
Harlow, Essex, CM20 2DY, UK
Phone: +44 1279 63 55 33
Fax: +44 1279 62 50 29
Email: sales@jumo.co.uk
Internet: www.jumo.co.uk

JUMO Process Control, Inc.
6724 Joy Road
East Syracuse, NY 13057, USA
Phone: +1 315 437 5866
Fax: +1 315 437 5860
Email: info.us@jumo.net
Internet: www.jumousa.com