JUMO dTRANS p35

Pressure Sensor with IO-Link

IO-Link

Operating Manual

JUMO

40205800T90Z001K000

V7.01/EN/00656419/2026-01-13

Further information and downloads

jmo.to/402058-en

Table of contents

1 Introduction . . . 5

1.1 Safety information . . . 5
1.2 Description and intended use . . . 6
1.3 Hot surfaces . . . 6
1.4 Hazardous materials . . . 6
1.5 Approval marks and certificates . . . 7
1.6 Display and connection elements . . . 7

2 Identifying the device version . . . 8

2.1 Nameplate . . . 8
2.2 Order details . . . 9
2.3 Scope of delivery . . . 10
2.4 Accessories . . . 10

3 Technical data . . . 11

3.1 Inputs . . . 11
3.2 Outputs . . . 13
3.3 Interfaces . . . 13
3.4 Electrical data . . . 14
3.5 Environmental influences . . . 15
3.6 Mechanical features . . . 15
3.7 Dimensions . . . 16

4 Mounting . . . 20

4.1 Important information for usage according to EHEDG . . . 20

5 Electrical connection . . . 22

5.1 Connection examples . . . 23

6 Device functions . . . 24

6.1 Switching points . . . 24
6.1.1 Hysteresis function . . . 25
6.1.2 Window function . . . 26
6.1.3 Switch-on delay/switch-off delay . . . 27
6.2 Fine adjustment . . . 28
6.3 Teach functions . . . 30
6.4 Fault signaling . . . 31

7 Configuration . . . 33

Table of contents

8 Parameter overview 34

8.1 Process data 34
8.2 Configuration data 35
8.3 Service data 38

9 Shutdown 39

9.1 Disposal 39

10 Certificates 40

10.1 China RoHS 40

1.1 Safety information

General

This manual contains information that must be observed in the interest of your own safety and to avoid material damage. This information is supported by symbols which are used in this manual as indicated.

Please read this manual before starting up the device. Store this manual in a place that is accessible to all users at all times.

If difficulties occur during startup, please do not intervene in any way that could jeopardize your warranty rights!

Warning symbols

CAUTION!

This symbol in connection with the signal word indicates that **material damage or data loss** will occur if the respective precautionary measures are not taken.

READ THE DOCUMENTATION!

This symbol, which is attached to the device, indicates that the associated **documentation for the device** must be **observed**. This is necessary to identify the nature of the potential hazard, and to take measures to prevent it.

Note symbols

NOTE!

This symbol refers to **important information** about the product, its handling, or additional benefits.

REFERENCE!

This symbol refers to **additional information** in other sections, chapters, or other manuals.

1.2 Description and intended use

NOTE!

Please read this manual before starting up the device. Store this manual in a place that is accessible to all users at all times.

The pressure sensor serves to measure relative and absolute pressure and monitor it in liquids and gases. The effect of the pressure on the pressure sensor generates a signal, which is amplified, digitalized, and processed.

The pressure sensor is equipped with an IO-Link interface according to specification 1.1. IO-Link supports bidirectional communication and is used to exchange process data, parameters, diagnostic information, and status messages. The two green LEDs are permanently lit as soon as voltage is supplied to the device. Once an IO-Link connection is established, the LEDs flash.

The switching behavior and the switching thresholds of the switching outputs (max. 2 pieces; p or n switching) can be individually configured - along with many other parameters. Any IO-Link master can be used for the configuration.

The pressure sensor is therefore suitable for use in plant and mechanical engineering in connections to automation systems. A variety of pressure connections and measuring ranges are available to the user.

The pressure sensor is UL-approved. The approval stipulates use of the pressure sensor indoors only.

The protection offered by the pressure sensor may be impaired if the pressure sensor is used in a way that does not comply with the manufacturer's intended use.

1.3 Hot surfaces

Hot media may result in the device surfaces becoming hot and presenting a risk of injury.

- Allow the device and plant to cool down.
- Wear suitable protective equipment.
- If required, install contact protection.

1.4 Hazardous materials

Using hazardous materials as a medium may result in abrasive and corrosive damage to components of the product that come into contact with the medium. The medium may leak and present a fire hazard and a risk to health.

Carry out a risk assessment taking into consideration the safety data sheet for the relevant hazardous substance for mounting, operation, maintenance, cleaning, and disposal:

- Comparison and systematic checking of the durability of the components of the product that come into contact with the medium and the admissible environmental influences.
- Assessment of the risk to people and the environment.
- Assessment of the fire hazard due to the product materials, the admissible environmental influences, and the voltage supply.

1.5 Approval marks and certificates

	Designation	UL
	Test facility	Underwriters Laboratories
	Certificate no.	E201387
	Inspection basis	UL 61010-1, 3rd Ed. May 2012 revised 19 July 2019 and CAN/CSA-C22.2 No. 61010-1 (2012-05). 3rd Ed. with revision through 2018-11
	Valid for	Type 402058
	Designation	EHEDG
	Test facility	EHEDG
	Certificate no.	EHEDG-C2000058
	Inspection basis	Test report of the in-place cleanability test method
	Valid for	Type 402058
	Designation	H2 ready – mobile hydrogen applications
	Test facility	KIWA
	Certificate no.	P000415366HGV19
	Inspection basis	CSA ANSI HGV 3.1:2022
	Valid for	Type 402058 with extra code 1160

1.6 Display and connection elements

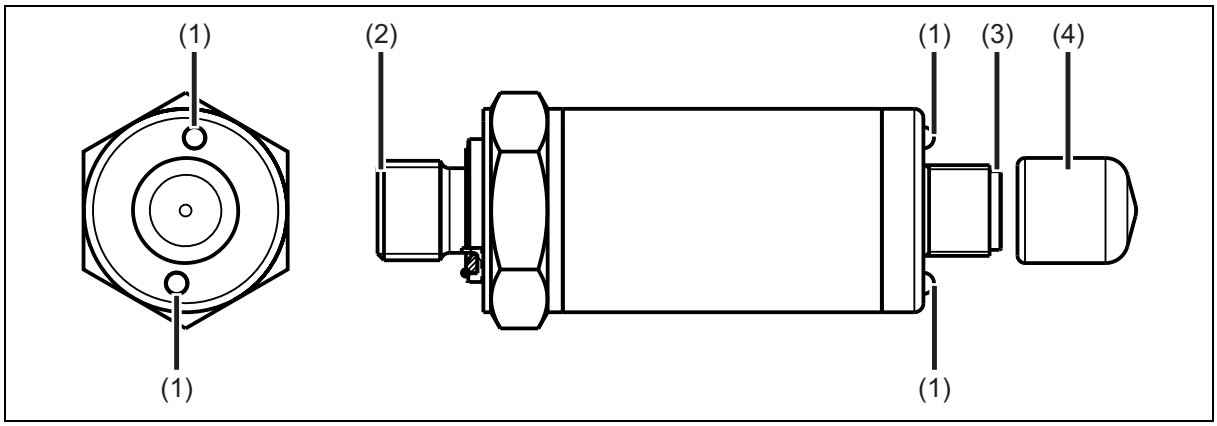

(1) Status LEDs
(2) Pressure connection with membrane for recording pressure levels
(3) M12 connection
(4) Protective cap for storage and transport

2 Identifying the device version

2.1 Nameplate

Position

The nameplate is located on the housing surface.

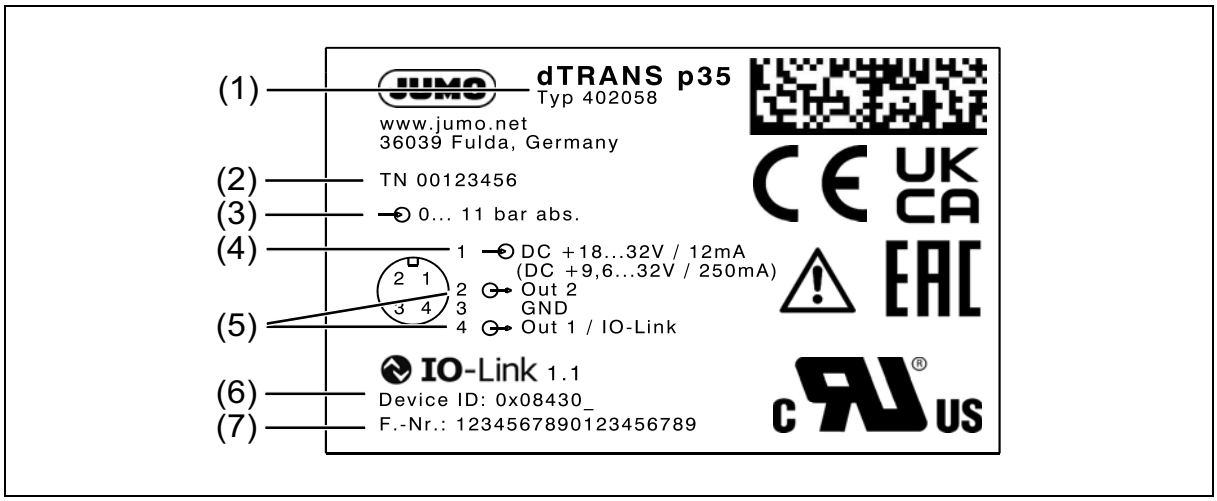

(1)	Device name	(2)	Part no.
(3)	Input – nominal measuring range	(4)	Voltage supply and maximum current consumption[a] ⇨For more in-depth information, see „technical data“
(5)	Outputs	(6)	Device ID
(7)	Fabrication number		

[a] The specifications outside the brackets „()“ refer to use of the device in IO-Link operation. The specifications inside the brackets „()“ refer to use of the device in switch operation.

Part no.

The part no. clearly identifies an article in the catalog. It is important for communication between the customer and the sales department.

Device ID

The device ID can help when localizing the device description file (IODD), which can be found on the manufacturer's website and also downloaded if necessary.

Downloading the IODD:

1. Open the website www.jumo.de (change the language to English if necessary)
2. Use the search function to select the device
3. Under "Software", download the ZIP file containing the collection of IODDs
4. Extract all files from the ZIP folder
5. Use the device ID to locate the IODD and save it

The IODD is now available for use with the IO-Link master's configuration tool. This can be used to configure and check the device.

Instead of the manufacturer's website, you can also use the address: http://ioddfinder.io-link.com.

Fabrication number (F-Nr)

Among other things, the fabrication number indicates the date of manufacture (year/calendar week).

Date of manufacture

The device's date of manufacture (year and calendar week) is part of the fabrication number. Digits 12 to 15 denote the year of manufacture (in this case 17 for 2017) and the calendar week (11 in this case).

2.2 Order details

	(1)	**Basic type**
402058		JUMO dTRANS p35 – pressure sensor with IO-Link
	(2)	**Basic type extension**
000		None
004		Raised medium temperature[a]
999		Special version
	(3)	**Input**
447		-400 to +400 mbar relative pressure
449		-1 bar to +1 bar relative pressure
473		-1 bar to +2.5 bar relative pressure
482		-1 bar to +5 bar relative pressure
526		-1 bar to +12 bar relative pressure
527		-1 bar to +30 bar relative pressure
515		-1 bar to +100 bar relative pressure
508		-1 bar to +250 bar relative pressure
509		-1 bar to +400 bar relative pressure
516		-1 bar to +600 bar relative pressure
488		0 to 1 bar absolute pressure
490		0 to 2.5 bar absolute pressure
500		0 to 5 bar absolute pressure
501		0 to 12 bar absolute pressure
503		0 to 30 bar absolute pressure
507		0 to 100 bar absolute pressure
	(4)	**Output**
458		IO-Link measured value transmission, including digital output
	(5)	**Process connection**
502		G 1/4 DIN EN 837
504		G 1/2 DIN EN 837
511		1/4-18 NPT DIN EN 837
521		G 1/4 DIN 3852-11
523		G 1/2 DIN 3852-11
571		G 3/4 front-flush DIN EN ISO 228-1[b]
574		G 1/2 front-flush with double seal[b]
575		G 3/4 front-flush with double seal[b]
603		Taper socket with union nut DN 20 DIN 11851 (dairy pipe fitting)[b/c]
604		Taper socket with union nut DN 25 DIN 11851 (dairy pipe fitting)[b/c]
605		Taper socket with union nut DN 32 DIN 11851 (dairy pipe fitting)[b/c]
606		Taper socket with union nut DN 40 DIN 11851 (dairy pipe fitting)[b/c]
607		Taper socket with union nut DN 50 DIN 11851 (dairy pipe fitting)[c/d]
612		Clamping socket (clamp) DN 10/15/20 according to DIN 32676[d]
613		Clamping socket (clamp) DN 25/32/40 according to DIN 32676[d]

616		Clamping socket (clamp) DN 50 (2") according to DIN 32676[e]
997		JUMO PEKA hygienic process connection[b]
999		Additional process connections on request[f]
	(6)	**Process connection material**
20		Stainless steel 316L
	(7)	**Electrical connection**
36		Round plug M12 × 1
	(8)	**Extra codes**
000		Without approval
061		UL approval
100		Customer-specific configuration (specifications in plain text)
591		Choke in the pressure channel[g]
631		Improved moisture and vibration protection
1160		H2 ready – mobile hydrogen applications[h]

[a] The inputs 447, 449, 488, 490, 508, 509 and 516 are excluded.
[b] Process connections 571, 574, 575, 603, 604, 605, 606, and 997 are only available for measuring spans up to 40 bar.
[c] The grooved union nut is included in the scope of delivery.
[d] Process connections 607, 612, and 613 are only available for measuring spans up to 25 bar.
[e] Process connection 616 is only available for measuring spans up to 16 bar.
[f] Process connection 999 without UL approval.
[g] Choke only for non-front-flush process connections.
[h] Only with process connections 502, 504, or 511 and not available with basic type extension 004.

	(1)		(2)		(3)		(4)		(5)		(6)		(7)		(8)
Order code		/		-		-		-		-		-		/	
Order example	402058	/	000	-	526	-	458	-	504	-	20	-	36	/	061

2.3 Scope of delivery

Pressure sensor in the ordered version
Installation Instructions

2.4 Accessories

Designation	**Part no.**
Pre-configuration (service)	00427968
Service deployment	00427970
IO-Link master, 4-channel	00759867
IO-Link master, 8-channel	00759875
USB IO-Link master, 1-channel (use with Windows® PC), including mini USB cable	00694070
Connection line M8/voltage supply line 2 m, IO-Link master, 4-channel	00767913
Connection line M12/voltage supply line 2 m, IO-Link master, 8-channel	00767914
Connection line M8/Ethernet 2 m, IO-Link master, 4-channel	00767923
Connection line M12/Ethernet 2 m, IO-Link master, 8-channel	00767927
Connection line M12, 5-pole, 2 m	00777804
JUMO dTRANS p35 IO-Link IODD V1.0.1	00681036
JUMO dTRANS p35 IO-Link IODD V1.1	00681037

3.1 Inputs

Measuring range and accuracy

Measuring range (MR) bar	Linearity[a] % MSP[f]	Accuracy at 20 °C[d] % MSP	 -20 to +80 °C[e] % MSP	Long-term stability[b] % MSP per year	Overload capacity[c] bar	Burst pressure bar	Behavior at MR fallen below	 MR exceeded
-400 to +400 mbar relative pressure	0.3	0.7	2	≤ 0.3	1	1.5	Linear up to -1.5 % MSP Error value: $1 \cdot 10^{37}$	Linear up to 5 % MSP Error value: $2 \cdot 10^{37}$
-1 bar to +1 bar relative pressure	0.3	0.6	1.8	≤ 0.2	4	8		
-1 bar to +2.5 bar relative pressure	0.3	0.5	1.3		16	24		
-1 bar to +5 bar relative pressure	0.3	0.5	1.2		40	60		
-1 bar to +12 bar relative pressure	0.25	0.5	1		100	150		
-1 bar to +30 bar relative pressure	0.2	0.5	1		100	150		
-1 bar to +100 bar relative pressure	0.2	0.5	1		300	400		
-1 bar to +250 bar relative pressure	0.5	0.7	1.2		500	2000		
-1 bar to +400 bar relative pressure	0.5	0.7	1.2		800	2000		
-1 bar to +600 bar relative pressure	0.5	0.7	1.2		1200	2500		

[a] Linearity according to limit point setting

[b] Reference conditions EN 61298-1

[c] All pressure sensors are vacuum proof.

[d] Includes: linearity, hysteresis, repeatability, deviation of measuring range start value and measuring range end value

[e] Includes: linearity, hysteresis, repeatability, deviation of measuring range start value and measuring range end value, thermal effect on measuring range start and measuring span

[f] MSP = measuring span

3 Technical data

Measuring range (MR) bar	Linearity[a] % MSP[f]	Accuracy at 20 °C[d] % MSP	 -20 to +80 °C[e] % MSP	Long-term stability[b] % MSP per year	Overload capacity[c] bar	Burst pressure bar	Behavior at MR fallen below	 MR exceeded
0 to 1 bar absolute pressure	0.3	0.5	1.3	≤ 0.2	4	6	No detection	Linear up to 5 % MSP Error value: $2 \cdot 10^{37}$
0 to 2.5 bar absolute pressure	0.25	0.5	1.2		16	24		
0 to 5 bar absolute pressure	0.25	0.5	1.2		40	60		
0 to 12 bar absolute pressure	0.25	0.5	1		100	150		
0 to 30 bar absolute pressure	0.2	0.5	1		100	150		
0 to 100 bar absolute pressure	0.2	0.5	1		400	400		

[a] Linearity according to limit point setting
[b] Reference conditions EN 61298-1
[c] All pressure sensors are vacuum proof.
[d] Includes: linearity, hysteresis, repeatability, deviation of measuring range start value and measuring range end value
[e] Includes: linearity, hysteresis, repeatability, deviation of measuring range start value and measuring range end value, thermal effect on measuring range start and measuring span
[f] MSP = measuring span

Signal processing

Input filter	Digital filter, 2nd order; filter time constant can be set

Measuring circuit monitoring

Process data invalid	IO-Link event configurable; appears in the process value as an error value
Measuring range overflow	
Measuring range underflow	
Device hardware fault	

3.2 Outputs

Number	1 output in IO-Link operation (output signal according to IO-Link communication standard version 1.1; see section"Interfaces ", Page 13) 2 outputs for switch operation (SIO mode; SIO = standard IO)
Switching functions configurable	Hysteresis function or window function Normally closed contact or normally open contact Output p-switching (PNP) or n-switching (NPN) Switch-on and switch-off delay
Switching current	≤100 mA per output
Voltage drop at switching transistor	≤ 2 V
Short-circuit proof	Yes (clocked)
Reverse polarity protected	Yes
Current limiting	Yes
Hysteresis For hysteresis function For window function	 Configurable Fixed setting (symmetrical; ±0.25 % of the measuring range)
Switch-on, switch-off delay	0 to 100 s

Response time Switching output IO-Link	 ≤7 ms ≤7 ms + IO-Link cycle time

3.3 Interfaces

Communication interface	IO-Link device V 1.1, downward compatible to V 1.0
Data transmission rate (baud rate)	COM 3 (230.4 kBaud)
Max. cable length	20 m, unshielded
Min. cycle time	2 ms
IO Device Description (IODD)	Depending on the ordered input range; available on the manufacturer's website www.jumo.de or at http://ioddfinder.io-link.com

3.4 Electrical data

Voltage supply	
In IO-Link operation	DC 18 to 32 V
In switch operation	DC 9.6 to 32 V
Nominal voltage	DC 24 V
Current consumption	
In idle mode	≤ 10 mA
In IO-Link operation	≤ 12 mA
In switch operation	≤ 250 mA (with 2 switching outputs)
Electrical safety	Protection rating III according to DIN EN 61140
Intended use	Pressure measurement in industrial plants

The auxiliary energy of the pressure transmitter must meet SELV requirements. Furthermore, the device must be equipped with an electrical circuit that meets the requirements of EN 61010-1 with regard to "Limited-energy circuits".

3.5 Environmental influences

Admissible temperatures	
Medium	-40 to +125 °C (standard)
Basic type extension 004	-40 to +200 °C
Extra code 1160	-40 to +120 °C
Ambient temperature	-40 to +85 °C (ambient temperature range of the head)
Storage	-40 to +85 °C
Resistance to climatic conditions	
During operation	≤100 % relative humidity without condensation on the outer skin of the device
During storage	≤90 % relative humidity without condensation
Climate class	3K7 according to DIN EN 60721-3-3
Admissible mechanical load	
Vibration resistance	10 g at 10 to 2000 Hz according to DIN EN 60068-2-6
Shock resistance	20 g for 11 ms according to DIN EN 60068-2-27 50 g for 1 ms according to DIN EN 60068-2-27
Process media	Liquid and gaseous media
Protection type	According to DIN EN 60529
With absolute pressure version	IP65/IP67
With relative pressure version	IP65
Electromagnetic compatibility	According to DIN EN 61326-2-3
Interference emission	Class B[a]
Interference immunity	Industrial requirement

[a] The product is suitable for industrial use as well as for households and small businesses.

3.6 Mechanical features

Materials	
Sensor	Stainless steel (membrane, welding ring: 316L)
High-pressure sensor	Stainless steel 630 (for pressure ranges > 100 bar)
Process connection	Stainless steel 316L or 316Ti
Housing	Stainless steel 304
Installation position	Any
Calibration position	Device upright, process connection at the bottom
Weight	Approx. 160 g

3.7 Dimensions

Type 402058/000-XXX-458-5XX-20-36/000
Non-front-flush versions: 502, 504, 511, 521, and 523;
Front-flush version: 571, 574, and 575;
Measuring range ≤ 100 bar

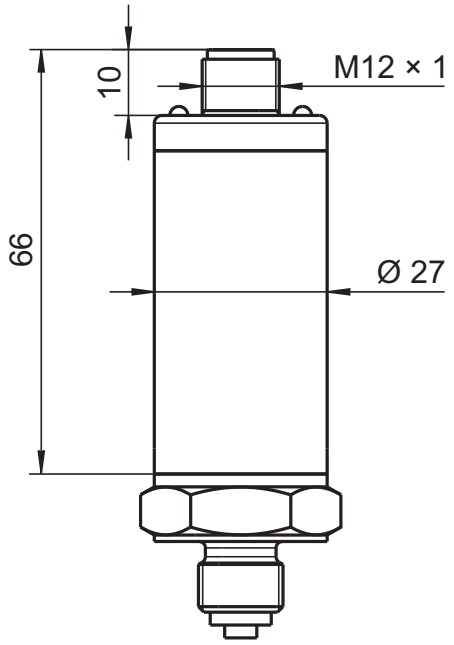

Type 402058/000-XXX-458-997-20-36/000
JUMO PEKA; measuring range ≤ 100 bar

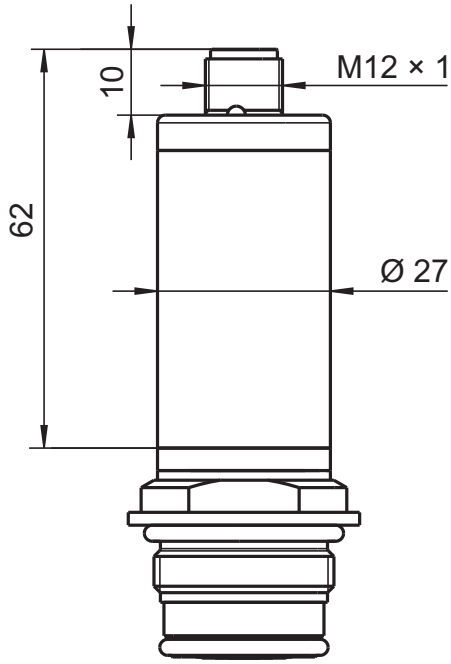

Type 402058/000-XXX-458-XXX-20-36/000
High-pressure version; measuring range > 100 bar

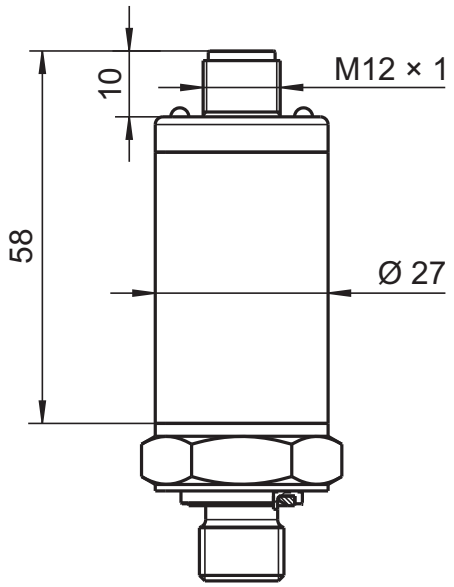

Type 402058/004-XXX-458-613-20-36/000
High-temperature version; measuring range ≤ 100 bar

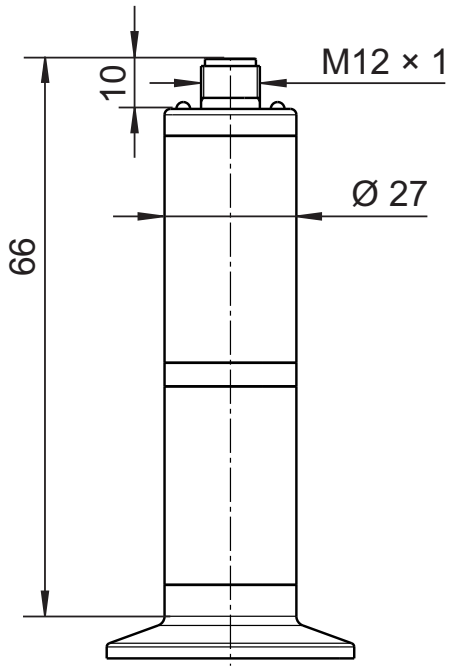

Process connections

502
G 1/4 DIN EN 837

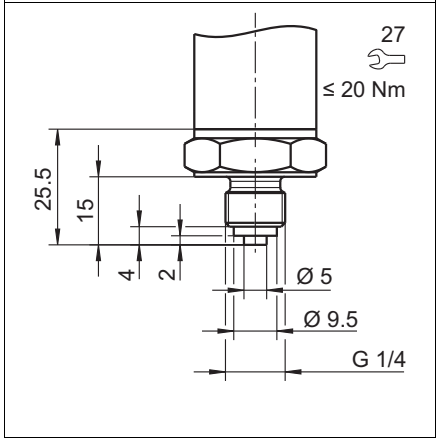

504
G 1/2 DIN EN 837

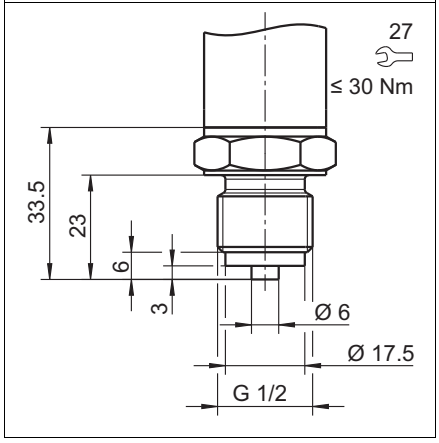

511
1/4-18 NPT DIN EN 837

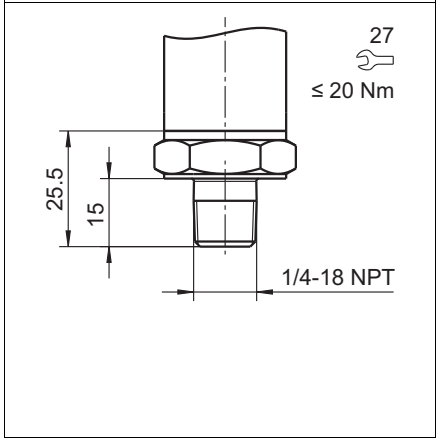

521
G 1/4 DIN 3852-11

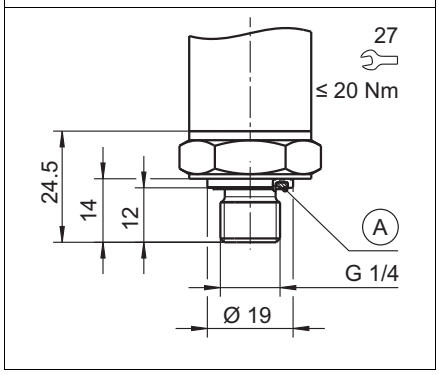

A Profile seal G 1/4

523
G 1/2 DIN 3852-11

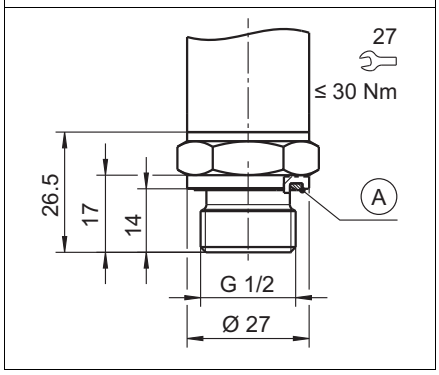

A Profile seal G 1/2

571
G 3/4 front-flush DIN 3852-11

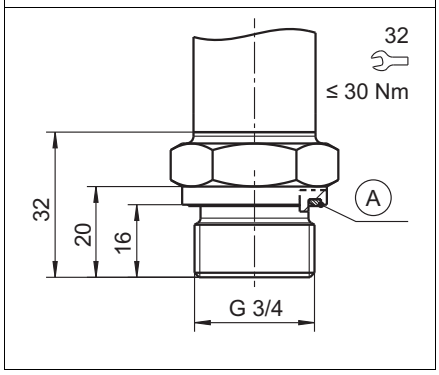

A Profile seal G 3/4

574
G 1/2 front-flush with double seal

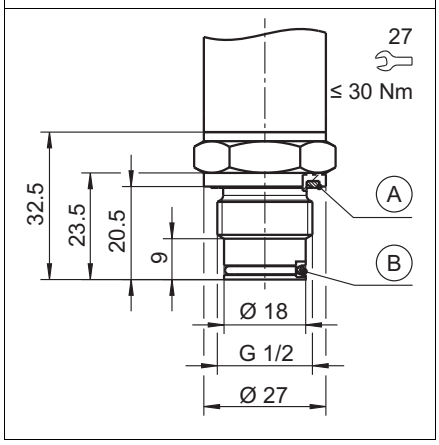

A Profile seal G 1/2
B O-ring 15.1 × 1.6

575
G 3/4 front-flush with double seal

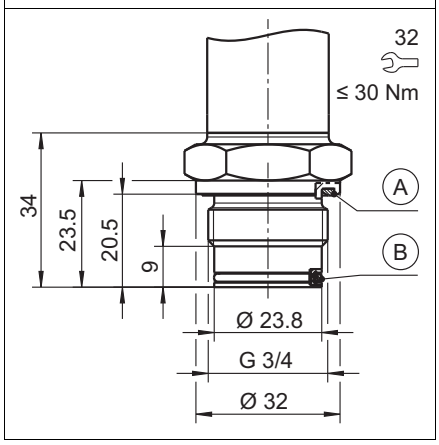

A Profile seal G 3/4
B O-ring 20.35 × 1.78

603 to 607
Taper socket with union nut

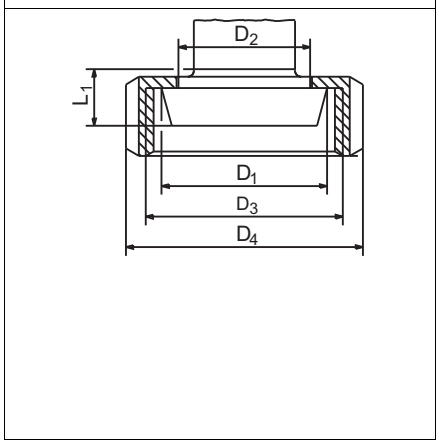

3 Technical data

612 to 616 Clamping socket (clamp)	997 JUMO PEKA[a]
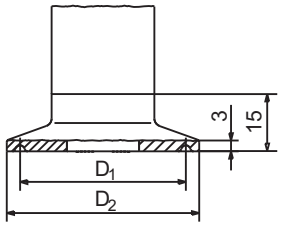	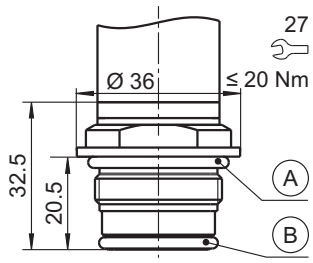

A O-ring 26 × 2.5

B O-ring 21 × 2.5

Hygienic process connection for adapter system JUMO PEKA (data sheet 409711)

[a] PEKA is also certified according to EHEDG.

Process connection	DN DIN 32676	Ø D_1	Ø D_2	Ø D_3	Ø D_4	L_1
603	20	36.5	30	RD 44 x $^1/_6$"	54	14
604	25	44	35	RD 52 x $^1/_6$"	63	16
605	32	50	41	RD 58 x $^1/_6$"	70	16
606	40	56	48	RD 65 x $^1/_6$"	78	16
607	50	68.5	61	RD 78 x $^1/_6$"	92	17
612	10 15 20	27.5	34	-	-	-
613[a]	25 32 40	43.5	50.5	-	-	-
616[a]	50	56.5	64	-	-	-

[a] Certified according to EHEDG.

Process connection	Designation	Max. pressure	Temperature
571	G 3/4 front-flush DIN EN ISO 228-1	25 bar	-10 to +150 °C
		40 bar	-10 to +100 °C
574	G 1/2 front-flush with double seal	25 bar	-10 to +150 °C
		40 bar	-10 to +100 °C
575	G 3/4 front-flush with double seal	25 bar	-10 to +150 °C
		40 bar	-10 to +100 °C
603	Taper socket DN 20 DIN 11851 form SC/SD	40 bar	-10 to +140 °C
604	Taper socket DN 25 DIN 11851 form SC/SD	40 bar	-10 to +140 °C
605	Taper socket DN 32 DIN 11851 form SC/SD	40 bar	-10 to +140 °C
606	Taper socket DN 40 DIN 11851 form SC/SD	40 bar	-10 to +140 °C
607	Taper socket DN 50 DIN 11851 form SC/SD	25 bar	-10 to +140 °C
612	Clamping socket DN 10/15/20 DIN 32676 series A	25 bar	-10 to +140 °C
613	Clamping socket DN 25/32/40 DIN 32676 series A	25 bar	-10 to +140 °C
616	Clamping socket DN 50 DIN 32676 series A	16 bar	-10 to +140 °C
997	PEKA	25 bar	-10 to +200 °C
		40 bar	-10 to +100 °C

Specifications according to DIN standards for intended use. The temperature range depends on the sealing material and the pressure range.

4 Mounting

The device may only be installed, connected and started up by qualified and authorized personnel observing these operating instructions, the applicable standards, and the legal requirements (depending on the application).

The device does not meet the requirements for "safety accessories" within the meaning of the Pressure Equipment Directive 2014/68/EU.

If you experience difficulties during installation and startup, please contact the manufacturer.

The device can be installed in any position.

NOTE!

The pressure sensor is not suitable for safety-critical applications.

NOTE!

The pressure sensor is not suitable for installation and application in potentially explosive areas.

NOTE!

The pressure sensor must be connected to the plant's potential equalization system via the process connection.

NOTE!

Mount the device so that abrasion at the process connection is avoided.

Mounting the sensor

- Insert the pressure sensor into the corresponding drilled hole and tighten it by hand, making sure the profile seal and/or O-ring (if fitted) are sitting correctly
- Tighten the pressure sensor with a suitable wrench

⇨Wrench size and torque see "Process connections", Page 17

4.1 Important information for usage according to EHEDG

The following process connections are suitable for usage according to EHEDG:

- 613 and 616 (Clamp DN 25/32/40/50 with Tri-Clamp seals Combifit International B.V.)
- 997 (JUMO PEKA with FKM O-ring)

The pressure transmitter is suitable for CIP (cleaning in place) with appropriate installation. For temperature and material resistance, see chapter 3.5 "Environmental influences", Page 15.

Observe the following points to ensure EHEDG compliant integration in the respective plants:

- Where possible, provide a cavity-free installation,
- Install the connecting sockets so that they are self-draining.
- Use only EHEDG approved process connections according to the current EHEDG position paper.
- When used on tanks, installation must be flush-mounted. Direct spraying for cleaning must be ensured. Dead spaces must be detectable.
- Install the leakage opening so that it is clearly visible. Install vertical lines facing downwards.

The following drawing shows an example installation. To avoid cavities, **L** must be **< D**.

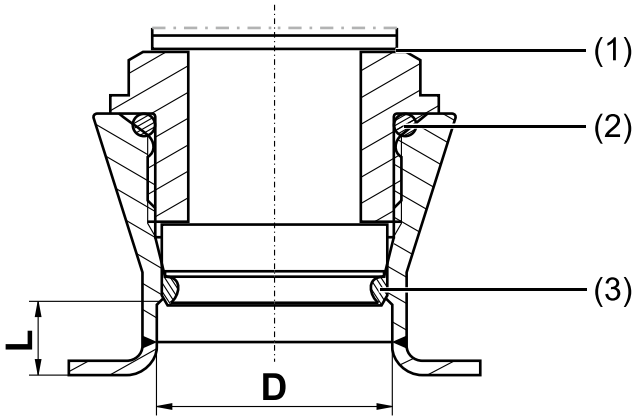

(1) Leakage opening
(2) Rear seal
(3) Front-flush seal

5 Electrical connection

Connection	Terminal assignment	
	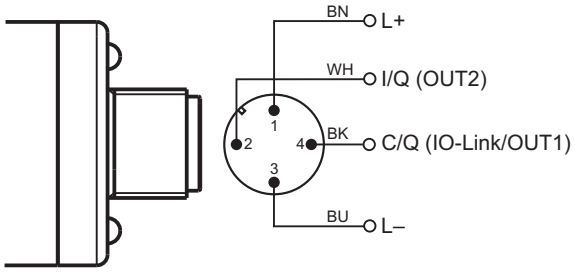	
	M12 x 1 round plug (A-coded, non-rotating)	
Switch operation		
Voltage supply DC 9.6 to 32 V	1 BN (brown)[a] 3 BU (blue)	L+ L-
Switching output 1	4 BK (black)	C/Q = OUT1
Switching output 2	2 WH (white)	I/Q = OUT2
IO-Link operation		
Voltage supply[a] DC 18 to 32 V	1 BN (brown) 3 BU (blue)	L+ L-
IO-Link	4 BK (black)	C/Q = IO-Link
Switching output 2	2 WH (white)	I/Q = OUT2
Potential equalization		
Functional bonding conductor FB[b]	⏚	

[a] The color coding is **only** valid for A-coded standard cables!

[b] The pressure sensor must be connected to the plant's potential equalization system via the process connection.

NOTE!

When using the device with UL approval, the user must make sure that the accessory he uses is also approved for a UL application (e. g. cable with UL approval AVLV2/8 and/or cable with UL approval CYJV/7 or CYJV/8 or PVVA/7 or PVVA2/8, in each case approved for ambient temperatures > 90 °C).

5.1 Connection examples

IO-Link operation with 1 switching output	Switch operation with 2 switching outputs
p switching (PNP)	p switching (PNP)
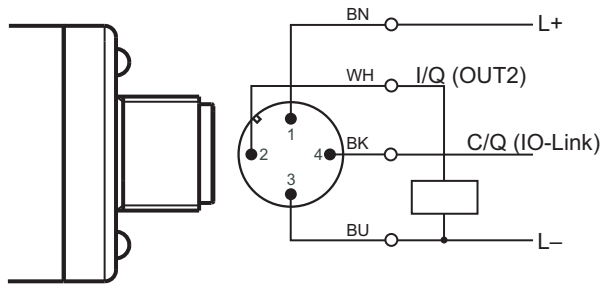	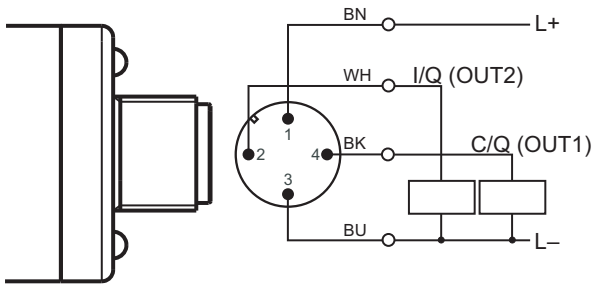
n switching (NPN)	n switching (NPN)
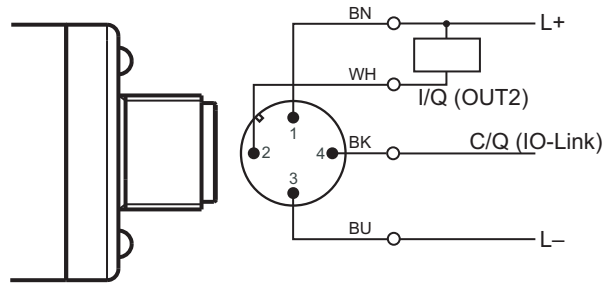	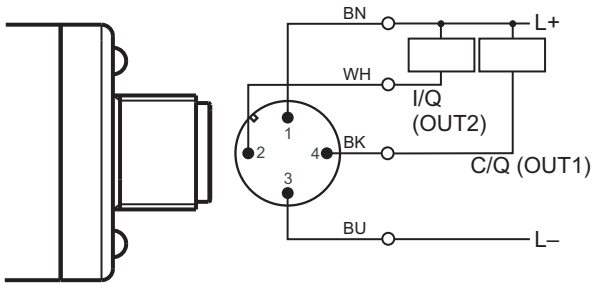

6 Device functions

CAUTION!

Write operations to some R/W parameters result in them being saved to the EEPROM. This memory module has only a limited number of write cycles (approx. 100,000).

Frequent writing of certain parameters can therefore result in a memory error.

▶ Fast writing cycles should thus be avoided.

6.1 Switching points

Depending on the operating mode, the sensor has 1 or 2 switching outputs. It automatically detects the connection type and responds accordingly. Separate parameters are available for both switching outputs.

Operating mode	Output	Pin at the M12 connection
SIO mode (SIO = Standard IO)	Switching output 1	C/Q (OUT1)
	Switching output 2	I/Q (OUT2)
IO-Link mode	IO-Link communication	C/Q (IO-Link)
	Switching output 2	I/Q (OUT2)

Parameter

Parameter	Selection/settings	Description
Switching behavior	**Inactive** Hysteresis function, N/O Contact Hysteresis function, N/C Contact Window function, N/O Contact Window function, N/C Contact	When inactive is selected, the selected switching output is not activated.
Switching point (SP) or window high (FH)	-99999 to **0** to +99999	The selected switching output is only activated if rSP < SP or FL < FH. ⇨Chapter 6.1.1 ⇨Chapter 6.1.2
Release point (rSP) or window low (FL)	-99999 to **0** to +99999	
Switch-on delay (VSP)	**0** to 100 s	⇨Chapter 6.1.3
Switch-off delay (VrSP)	**0** to 100 s	
Output driver mode	**P-Switching** n switching	⇨Chapter 5.1

6.1.1 Hysteresis function

The hysteresis function switches the output as soon as the switching point "SP" is reached. When the release point "rSP" is reached, the output switches again.

The hysteresis function distinguishes between N/C and N/O contacts.

Switching requirement: Switching point "SP" ≥ Release point "rSP"

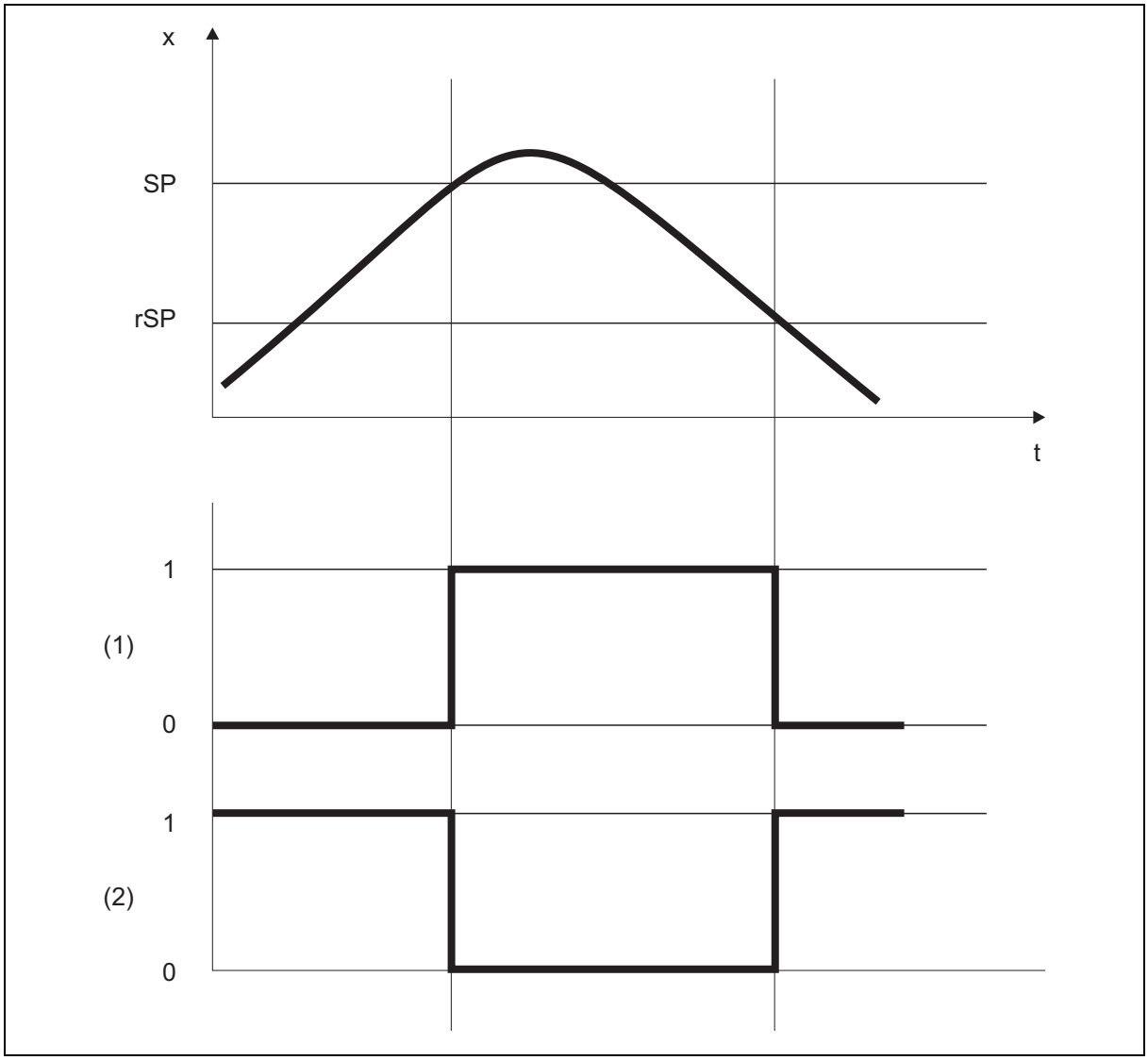

x = Measured value
t = Time
SP = Switching point
rSP = Release point
(1) = N/O contact
(2) = N/C contact

6.1.2 Window function

Under the window function, the window range is defined using the parameters window low "FL" (lower value) and window high "FH" (upper value). The output switches when the current measured value (x) is between the two limits [(x > FL) & (x < FH)].

The window function distinguishes between N/C and N/O contacts.

Requirement: Window high "FH" >= Window low "FL"

The window high "FH" and window low "FL" switching points have a fixed symmetrical hysteresis of ± 0.25 % of the measuring range.

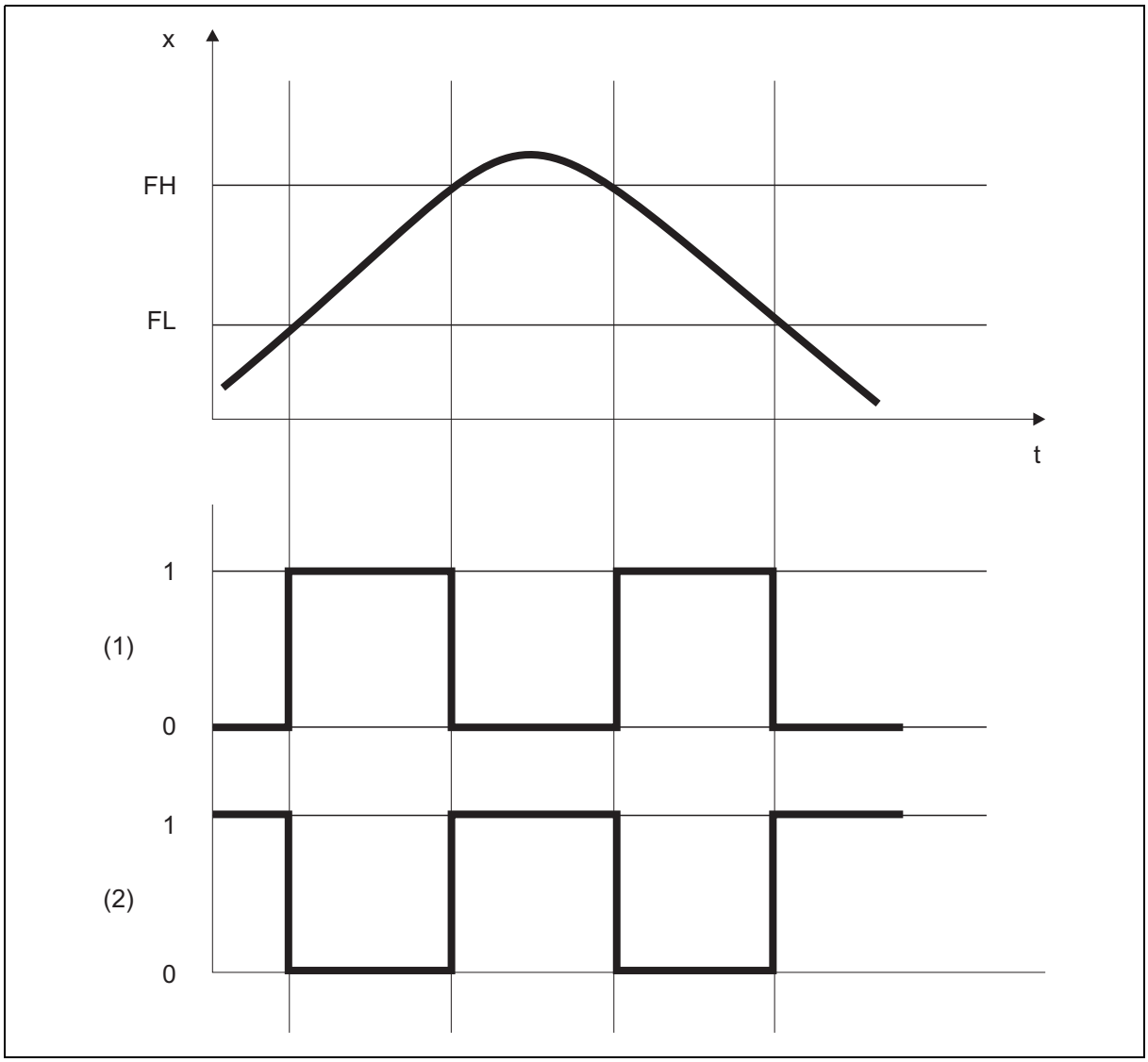

x = Measured value
t = Time
FH = Window high
FL = Window low
(1) = N/O contact
(2) = N/C contact

6.1.3 Switch-on delay/switch-off delay

The switch-on delay "VSP" and switch-off delay "VrSP" prevent switching of the output being triggered by peaks or drops in the measured values.

If the necessary measured value is no longer measured once the delay time has passed, the output is not switched.

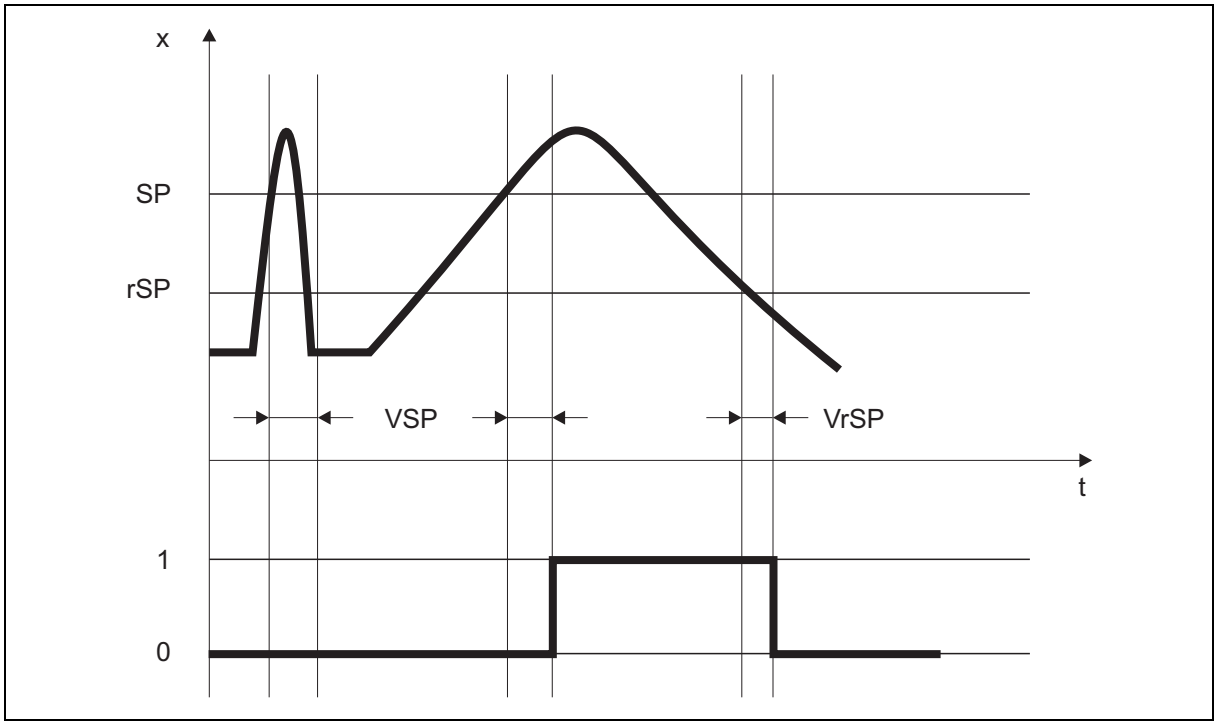

x = Measured value
t = Time
SP = Switching point
rSP = Release point
VSP = Switch-on delay
VrSP = Switch-off delay

6.2 Fine adjustment

You can use customer-specific fine adjustment to correct the measured values of the sensor. In contrast to offsetting, which is used to specify a constant correction value for the entire characteristic line, fine adjustment can also be used to change the gradient of the characteristic line.

NOTE!

This data is not stored in the parameter manager.

Parameter

Parameter	Selection/settings	Description
Active	**No**, Yes	Fine adjustment is only active if you select Yes
Actual start value	-99999 to **0** to +99999	Lower measured value
Target start value	-99999 to **0** to +99999	Lower reference value
Actual end value	-99999 to **0** to +99999	Upper measured value
Target end value	-99999 to **0** to +99999	Upper reference value

Example

The pressure in a vessel is measured and displayed. Due to a deviation in the measurement, the sensor's measured value does not correspond to the actual value (reference measurement). The amount of deviation is different at the upper and lower measuring points, meaning an offset correction is not suitable.

Active:	Yes
Actual start value:	15 bar (measured value)
Target start value:	20 bar (reference measurement)
Actual end value:	70 bar (measured value)
Target end value:	80 bar (reference measurement)

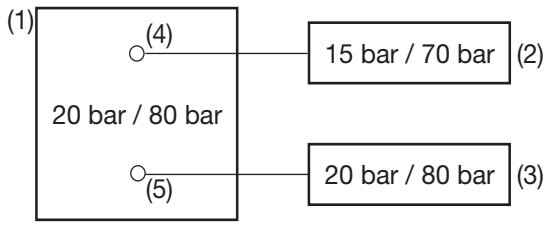

1 Vessel
2 Measured values from the sensor
3 Reference values
4 Sensor
5 Reference measurement

Performing fine adjustment

- Determine the lower value (as low and constant as possible) with the reference measuring device. Example: Set vessel pressure to 20 bar.
- Enter the measured value as the actual start value and the reference value as the target start value. Example: Enter 15 and 20.
- Determine the upper value (as high and constant as possible) with the reference measuring device. Example: Increase vessel pressure to 80 bar.
- Enter the measured value as the actual end value and the reference value as the target end value. Example: Enter 70 and 80.

NOTE!

The actual start value and actual end value can also be selected with the teach function.
⇨ chapter 6.3 "Teach functions", Page 30

Characteristic line

The following diagram shows the changes in the characteristic line caused by the fine adjustment (point of intersection with the x axis as well as the gradient).

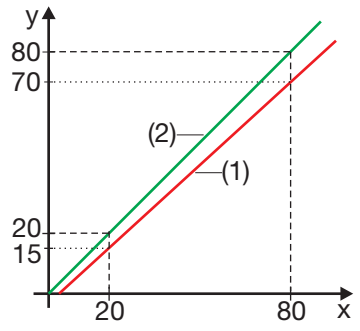

y	Measured value
x	Reference value
(1)	Characteristic line before fine adjustment
(2)	Characteristic line after fine adjustment

Resetting the fine adjustment

To reverse the fine adjustment, the "Active" parameter must be set to "No".

6.3 Teach functions

The teach functions can be used to transfer certain commands to the sensor.

Teach functions in the area of "General parameters"

Teach function	Description
Zero point adjustment	The current measured value is adopted as the offset.
Reset to default settings	All parameters under "General parameters", "Switching points", "Fine adjustment" and "Event settings" are reset to the default settings. The parameters under "Service information" stay the same.

Teach functions in the area of "Fine adjustment"

Teach function	Description
Set actual start value	The current measured value is adopted as the actual start value.
Set actual end value	The current measured value is adopted as the actual end value.

Teach functions in the area of "Service information"

Teach function	Description
Reset all	All parameters under "Service information" are reset to the default settings.
Reset operating hours counter	The operating hours counter is reset to the default settings.
Reset drag indicator min.	The stored minimum value is reset to the default settings.
Reset drag indicator max.	The stored maximum value is reset to the default settings.

NOTE!

After executing a teach function, the data may have to be exported from the sensor again in certain circumstances.

6.4 Fault signaling

IO-Link offers a range of fault signaling options (device status, event codes, PDValid-Flag). Furthermore, malfunctions can also be signaled within the process data via the process value itself or the status of the process value.

Overview

Description	Signaling via process value in PDI[a]	Process value status in PDI (1 byte)	Device status	Event code (Standard event)	Event activation or deactication possible	Event error type
No error	-	-	0 (device is working properly)	-	-	-
Process value invalid	Yes	Bit0 (Process data invalid)	4 (failure)	0x1000	Yes	Error
Overrange	Yes			0x8C20	Yes	Error
Underrange	Yes				Yes	Error
Error in configuration data	No	Bit1 (Parameter error)	4 (failure)	0x6320	No	Error
Error in calibration data	No	Bit2 (Device is defective)	4 (failure)	0x5000	Yes	Error
Device is defective (Probe break, probe short circuit)	Yes					
Undervoltage	No	-	2 (Outside the specification)	0x5111	No	Warning
Temperature error, overload	No	-	4 (failure)	0x4000	No	Error

[a] PDI = Process Data Input

6 Device functions

Device status and event codes

Various events can be activated or deactivated via configuration parameters.

PD-Valid Flag

If the device status is 4 (failure), the PDValid-Flag is set to zero (false). This means that all of the process data is invalid. In order to determine the precise cause, the process value or status bits can be evaluated.

Process value

The fault signaling is displayed as a floating-point value or integer value. The following statuses are defined:

Error	Error code for floating-point values (TFLOAT)	Error code for integer values (TINT32)
Measuring range underflow	1.0×10^{37}	2147483638
Measuring range overflow	2.0×10^{37}	2147483639
Not a valid input value	3.0×10^{37}	2147483640
Division by zero	4.0×10^{37}	2147483641
Mathematical error	5.0×10^{37}	2147483642
Probe short circuit	7.0×10^{37}	2147483644
Probe break	8.0×10^{37}	2147483645

Process value status

⇨ See chapter 8.1 "Process data", Page 34

Starting up the IO-Link master and configuration tool

If you are using a conventional IO-Link master, you must complete the following steps to configure the sensor.

1. Start up the hardware and software for the IO-Link master
2. Load the sensor's device description file (IODD)
   a) Open the website www.jumo.de (change the language to English if necessary)
   b) Use the search function to select the sensor
   c) Under "Software", download the ZIP file containing the collection of IODDs
   d) Extract all files from the ZIP folder
3. Start the configuation tool
4. Update the device catalog (import the IODD; localize using the "device ID" on the nameplate or the text file in the IODD collection)
5. Create a new project
6. Establish a connection
7. Configure, extract, monitor, etc., the sensor

Instead of the manufacturer's website, you can also use the address: http://ioddfinder.io-link.com.

Configuration tool (overview)

Depending on the configuration tool, the menu structure contains different areas. The typical structure is listed below:

- Identification and information
  These areas show information on the manufacturer and device as well as general information.
- Parameters
  This section is used to configure the device.
  – General parameters
  – Switching points ⇨ chapter 6.1 "Switching points", Page 24
  – Fine adjustment ⇨ chapter 6.2 "Fine adjustment", Page 28
  – Event settings ⇨ chapter 6.4 "Fault signaling", Page 31
  – Versions
  – Service information
- Monitoring
  In this area process data can be extracted (snapshot).
- Diagnosis and events
  These areas show diagnostic data and information about events.
- Process data
  This area shows the current process data, which is extracted cyclically.

8 Parameter overview

8.1 Process data

The data is transferred in a cycle via the IO-Link interface to the IO-Link master (PDI = Process Data Input). The entire process data can be extracted via index 40 and subindex 0.

Designation	Data type	Value range	Default	Description
Pressure process value	TFLOAT or TINT32		0	The "Data format" configuration parameter can be used to switch between the data type TFLOAT and TINT32. ⇨Chapter 8.2
Pressure process value unit	TUINT8	0 = bar 1 = mbar 2 = ftH_2O 3 = mmH_2O 4 = mmHG 5 = psi 6 = inH_2O 7 = inHG 8 = kg/cm^2 9 = kPa 10 = torr 11 = MPa 12 = mH_2O	bar	
Pressure process value status	TUINT8 (bit field)	Bit 0 = Process value invalid (overrange or underrange) Bit 1 = Error in configuration data Bit 2 = Error in calibration data (device is defective)	0	In order to provide a simple way to identify errors, alongside IO-Link's standard troubleshooting functions, a status byte is included in the process data. This signals errors in the sensor and is easy to analyze in the higher-level system. Errors are entered on a bit by bit basis but can also be combined to contain several device errors. ⇨Chapter 6.4
Switching output	TUINT8 (bit field)	Bit 0 = Switching output 1 Bit 1 = Switching output 2	0	0 = Not switched 1 = Switched

8.2 Configuration data

The configuration is stored in the parameter manager and is transferred via the IO-Link interface in an acyclic process.

General

Designation	Index	Subindex	Data type	Value range	Default	Access right[a]	Description
Data format	64	0	TENUM (1 byte)	0 = Floating point 1 = Integer	Floating point	RW	
Pressure process value unit	120	0	TENUM (1 byte)	0 = bar 1 = mbar 2 = ftH_2O 3 = mmH_2O 4 = mmHG 5 = psi 6 = inH2O 7 = inHG 8 = kg/cm^2 9 = kPa 10 = torr 11 = MPa 12 = mH_2O	bar	RW	Main value
Pressure process value offset	121	0	TFLOAT	-9999 to 9999	0	RW	
Pressure filter time constant	122	0	TFLOAT	0 to 100 s	0	RW	
Standard command	2	0	Button	176 = Complete zero point adjustment	-	WO	Sets up the offset value so that the process value is equal to zero.
Standard command	2	0	Button	130 = Reset to default setting	-	WO	The default data is loaded.

[a] RW = Read and write access
RO = Read-only access
WO = Write-only access

Switching output 1 and 2

Designation	Index	Subindex	Data type	Value range	Default	Access right	Description
Switching behavior	200 and 201	1	TENUM	0 = Inactive 1 = Hysteresis function N/O contact 2 = Hysteresis function N/C contact 3 = Window function N/O contact 4 = Window function N/C contact	Inactive	RW	Index 200 = Switching output 1 Index 201 = Switching output 2
Switching point/ Window high	200 and 201	2	TFLOAT	-99999 to 99999	0	RW	
Release point/ Window low	200 and 201	3	TFLOAT	-99999 to 99999	0	RW	
Switch-on delay	200 and 201	4	TFLOAT	0 to 100 s	0	RW	
Switch-off delay	200 and 201	5	TFLOAT	0 to 100 s	0	RW	
Output mode	200 and 201	6	TENUM (1 byte)	0 = p-switching 1 = n-switching	P-switching	RW	

Events

Designation	Index	Subindex	Data type	Value range	Default	Access right	Description
Event settings	111	0	TUINT8 (bit field)	Bit 0 = Process data invalid Bit 1 = Process data overrange Bit 2 = Process data underrange Bit 3 = Device hardware error	0	RW	0 = Inactive 1 = Active

Fine adjustment data

Designation	Index	Subin-dex	Data type	Value range	Default	Ac-cess right	Description
Active	220	0	TENUM (1 byte)	0 = No 1 = Yes	No	RW	
Actual start value	221	0	TFLOAT	-99999 to 99999	0	RW	
Actual end value	222	0	TFLOAT	-99999 to 99999	0	RW	
Target start value	223	0	TFLOAT	-99999 to 99999	0	RW	
Target end value	224	0	TFLOAT	-99999 to 99999	0	RW	
Standard com-mand	2	0	Button	160 = Set actual start value	-	WO	
Standard com-mand	2	0	Button	161 = Set actual end value	-	WO	

NOTE!

This data is not stored in the parameter manager and is transferred via the IO-Link interface in an acyclic process.

8.3 Service data

The service data is written to the EEPROM in a cyclical process (every 10 minutes) and can be reset via the teach functions.

Designation	Index	Subindex	Data type	Value range	Access right	Description
Operating hours counter	3000	0	TUINT32		RO	
Drag indicator pressure process value min.	3002	0	TFLOAT		RO	
Drag indicator pressure process value max.	3003	0	TFLOAT		RO	
Reset all	3100	0	Device command	1 = Reset	WO	Resets all drag indicators and the operating hours counter
Reset operating hours counter	3100	0	Device command	2 = Reset	WO	
Reset pressure drag indicator min.	3100	0	Device command	3 = Reset	WO	
Reset pressure drag indicator max.	3100	0	Device command	4 = Reset	WO	
VDN version	1000	0	TSTRING	12 byte	RO	
Bootloader version	1001	0	TSTRING	14 byte	RO	

9.1 Disposal

- Do not dispose of the device or replaced parts in the trash after use.
- Delete programs and data stored on the device.
- Remove batteries, if any, if this can be done without damaging the device.
- Dispose of the device and the packaging material in a responsible and environmentally friendly manner.
- Observe the country-specific laws and regulations for waste treatment and disposal.

In accordance with Directive 2012/19/EU on Waste from Electrical and Electronic Equipment, manufacturers are obliged to offer the option of returning waste equipment. Request the return from the manufacturer.

10 Certificates

10.1 China RoHS

部件名称 Product group: 402058	有毒有害物质或元素 Hazardous substances					
	铅（Pb）	汞（Hg）	镉（Cd）	六价铬（Cr(VI)）	多溴联苯（PBB）	多溴二苯醚（PBDE）
外壳 Housing (Gehäuse)	X	○	○	○	○	○
过程连接 Process connection (Prozessanschluss)	○	○	○	○	○	○
-螺母 Nut (Mutter)	○	○	○	○	○	○
螺钉 Screw (Schraube)	○	○	○	○	○	○

本表格依据 SJ/T 11364-2014的规定编制。
(This table is prepared in accordance with the provisions of SJ/T 11364-2014.)
O：表示该有害物质在该部件所有均质材料中的含量均在 GB/T 26572 规定的限量要求以下。
(O: Indicates that said hazardous substance contained in all of the homogeneous materials for this part is below the limit requirement of GB/T 26572.)
X：表示该有害物质至少在该部件的某一均质材料中的含量超出 GB/T 26572 规定的限量要求。
(X: Indicates that said hazardous substance contained in one of the homogeneous materials used for this part is above the limit requirement of GB/T 26572.)

JUMO GmbH & Co. KG
Street address:
Moritz-Juchheim-Straße 1
36039 Fulda, Germany
Delivery address:
Mackenrodtstraße 14
36039 Fulda, Germany
Postal address:
36035 Fulda, Germany
Phone: +49 661 6003-0
Fax: +49 661 6003-607
Email: mail@jumo.net
Internet: www.jumo.net

JUMO UK LTD
JUMO House
Temple Bank, Riverway
Harlow, Essex, CM20 2DY, UK
Phone: +44 1279 63 55 33
Fax: +44 1279 62 50 29
Email: sales@jumo.co.uk
Internet: www.jumo.co.uk

JUMO Process Control, Inc.
6724 Joy Road
East Syracuse, NY 13057, USA
Phone: +1 315 437 5866
Fax: +1 315 437 5860
Email: info.us@jumo.net
Internet: www.jumousa.com